IEC 60704-2-15

Edition 1.0 2024-09
EXTENDED VERSION

INTERNATIONAL STANDARD

colour inside

This full version of IEC 60704-2-15:2024 includes the content of the references made to IEC 60704-1:2021

Household and similar electrical appliances – Test code for the determination of airborne acoustical noise –
Part 2-15: Particular requirements for household food waste disposers

IEC 60704-2-15:2024-09 EXV(en)

Documents
Document Sharing Hub

Full document details: IEC 60704-2-15 2024 EXV

THIS PUBLICATION IS COPYRIGHT PROTECTED
Copyright © 2024 IEC, Geneva, Switzerland

All rights reserved. Unless otherwise specified, no part of this publication may be reproduced or utilized in any form or by any means, electronic or mechanical, including photocopying and microfilm, without permission in writing from either IEC or IEC's member National Committee in the country of the requester. If you have any questions about IEC copyright or have an enquiry about obtaining additional rights to this publication, please contact the address below or your local IEC member National Committee for further information.

IEC Secretariat
3, rue de Varembé
CH-1211 Geneva 20
Switzerland

Tel.: +41 22 919 02 11
info@iec.ch
www.iec.ch

About the IEC
The International Electrotechnical Commission (IEC) is the leading global organization that prepares and publishes International Standards for all electrical, electronic and related technologies.

About IEC publications
The technical content of IEC publications is kept under constant review by the IEC. Please make sure that you have the latest edition, a corrigendum or an amendment might have been published.

IEC publications search - webstore.iec.ch/advsearchform
The advanced search enables to find IEC publications by a variety of criteria (reference number, text, technical committee, …). It also gives information on projects, replaced and withdrawn publications.

IEC Just Published - webstore.iec.ch/justpublished
Stay up to date on all new IEC publications. Just Published details all new publications released. Available online and once a month by email.

IEC Customer Service Centre - webstore.iec.ch/csc
If you wish to give us your feedback on this publication or need further assistance, please contact the Customer Service Centre: sales@iec.ch.

IEC Products & Services Portal - products.iec.ch
Discover our powerful search engine and read freely all the publications previews, graphical symbols and the glossary. With a subscription you will always have access to up to date content tailored to your needs.

Electropedia - www.electropedia.org
The world's leading online dictionary on electrotechnology, containing more than 22 500 terminological entries in English and French, with equivalent terms in 25 additional languages. Also known as the International Electrotechnical Vocabulary (IEV) online.

Documents
Document Sharing Hub

Full document details: IEC 60704-2-15 2024 EXV

IEC 60704-2-15

Edition 1.0 2024-09
EXTENDED VERSION

INTERNATIONAL STANDARD

colour inside

This full version of IEC 60704-2-15:2024 includes the content of the references made to IEC 60704-1:2021

Household and similar electrical appliances – Test code for the determination of airborne acoustical noise –
Part 2-15: Particular requirements for household food waste disposers

INTERNATIONAL
ELECTROTECHNICAL
COMMISSION

ICS 17.140.20; 97.040.50

ISBN 978-2-8322-9772-8

Warning! Make sure that you obtained this publication from an authorized distributor.

® Registered trademark of the International Electrotechnical Commission

Documents
Document Sharing Hub

Full document details: IEC 60704-2-15 2024 EXV

CONTENTS

FOREWORD 4
INTRODUCTION to IEC 60704-1:2021 7
INTRODUCTION to IEC 60704-2-15:2024 8
1 Scope 9
2 Normative references 9
3 Terms and definitions 10
4 Measurement methods and acoustical environments 11
4.1 General 11
4.2 Direct method 11
4.3 Comparison method 12
4.4 Acoustical environments 12
4.4.1 General requirements and criterion for adequacy of the test environment 12
4.4.2 Criterion for background noise level 13
4.4.3 Environmental conditions 13
4.5 Measurement uncertainties 13
4.5.1 General 13
4.5.2 Standard deviations on repeatability and reproducibility and standard deviations related to declaration and verification 13
5 Instrumentation 14
5.1 Instrumentation for measuring acoustical data 14
5.2 Instrumentation for measuring climatic conditions 14
5.3 Instrumentation for measuring operating conditions 14
6 Operation and location of appliances under test 14
6.1 Equipping and pre-conditioning of appliances 14
6.2 Supply of electric energy and of water or gas 15
6.3 Climatic conditions 15
6.4 Loading and operating of appliances during tests 15
6.5 Location and mounting of appliances 16
7 Measurement of sound pressure levels 18
7.1 Microphone array, measurement surface and RSS location for essentially free field conditions over reflecting plane(s) 18
7.2 Microphone array and RSS location in hard-walled test rooms 20
7.3 Microphone array and RSS location in special reverberation test rooms 21
7.4 Measurements 21
8 Calculation of sound pressure and sound power levels 22
8.1 General 22
8.2 Corrections for background noise levels 22
8.3 Corrections for the test environment 23
8.4 Calculation of sound pressure level averaged over the microphone positions 23
8.5 Calculation of sound power levels with the comparison method 23
8.6 Calculation of sound power levels in free field conditions over a reflecting plane 24
8.7 Calculation of A-weighted sound power level with the direct method in special reverberation test rooms 24
9 Information to be recorded 25
9.1 General data 25

AVA Documents
Document Sharing Hub
Full document details: IEC 60704-2-15 2024 EXV

9.2 Description of appliance under test 25
9.3 Measurement method 25
9.4 Acoustical test environment 25
9.5 Instrumentation 26
9.6 Equipment and pre-conditioning of appliance under test 26
9.7 Electric supply, water supply, etc. 26
9.8 Climatic conditions 26
9.9 Operation of the appliance under test 26
9.10 Location and mounting of the appliance under test 27
9.11 Microphone array 27
9.12 Measurement data 27
9.13 Calculated sound pressure and sound power levels 27
9.14 Reporting 27
10 Information to be reported 28
10.1 General data 28
10.2 Appliance under test 28
10.3 Test conditions for the appliance 28
10.4 Acoustical data 29
Annex A (normative) Standard test table 30
Annex B (normative) Test enclosure 31
Annex C (informative) Guidelines for the design of simple test rooms with essentially free field conditions 34
Bibliography 35

Figure 101 – Food waste disposer 16
Figure 102 – Test enclosure – Mandatory characteristics drawing 18
Figure 2 – Measurement surface – parallelepiped – with key microphone positions, for floor standing appliances placed against a wall 19
Figure 103 – Six-microphone geometric setup with four optional microphones on the top measurement plane 20
Figure B.1 – Detail drawing of recommended design 31
Figure B.2 – ISO view without front panel and with hardware 32
Figure B.3 – Front view without front panel and with hardware, sink disposer and mounting assembly 33

Documents
Document Sharing Hub
Full document details: IEC 60704-2-15 2024 EXV

INTERNATIONAL ELECTROTECHNICAL COMMISSION

HOUSEHOLD AND SIMILAR ELECTRICAL APPLIANCES – TEST CODE FOR THE DETERMINATION OF AIRBORNE ACOUSTICAL NOISE –

Part 2-15: Particular requirements for household food waste disposers

FOREWORD

1) The International Electrotechnical Commission (IEC) is a worldwide organization for standardization comprising all national electrotechnical committees (IEC National Committees). The object of IEC is to promote international co-operation on all questions concerning standardization in the electrical and electronic fields. To this end and in addition to other activities, IEC publishes International Standards, Technical Specifications, Technical Reports, Publicly Available Specifications (PAS) and Guides (hereafter referred to as "IEC Publication(s)"). Their preparation is entrusted to technical committees; any IEC National Committee interested in the subject dealt with may participate in this preparatory work. International, governmental and non-governmental organizations liaising with the IEC also participate in this preparation. IEC collaborates closely with the International Organization for Standardization (ISO) in accordance with conditions determined by agreement between the two organizations.
2) The formal decisions or agreements of IEC on technical matters express, as nearly as possible, an international consensus of opinion on the relevant subjects since each technical committee has representation from all interested IEC National Committees.
3) IEC Publications have the form of recommendations for international use and are accepted by IEC National Committees in that sense. While all reasonable efforts are made to ensure that the technical content of IEC Publications is accurate, IEC cannot be held responsible for the way in which they are used or for any misinterpretation by any end user.
4) In order to promote international uniformity, IEC National Committees undertake to apply IEC Publications transparently to the maximum extent possible in their national and regional publications. Any divergence between any IEC Publication and the corresponding national or regional publication shall be clearly indicated in the latter.
5) IEC itself does not provide any attestation of conformity. Independent certification bodies provide conformity assessment services and, in some areas, access to IEC marks of conformity. IEC is not responsible for any services carried out by independent certification bodies.
6) All users should ensure that they have the latest edition of this publication.
7) No liability shall attach to IEC or its directors, employees, servants or agents including individual experts and members of its technical committees and IEC National Committees for any personal injury, property damage or other damage of any nature whatsoever, whether direct or indirect, or for costs (including legal fees) and expenses arising out of the publication, use of, or reliance upon, this IEC Publication or any other IEC Publications.
8) Attention is drawn to the Normative references cited in this publication. Use of the referenced publications is indispensable for the correct application of this publication.
9) IEC draws attention to the possibility that the implementation of this document may involve the use of (a) patent(s). IEC takes no position concerning the evidence, validity or applicability of any claimed patent rights in respect thereof. As of the date of publication of this document, IEC had not received notice of (a) patent(s), which may be required to implement this document. However, implementers are cautioned that this may not represent the latest information, which may be obtained from the patent database available at https://patents.iec.ch. IEC shall not be held responsible for identifying any or all such patent rights.

This extended version (EXV) of the official IEC Standard provides the user with the full content of the Standard.

IEC 60704-2-15:2024 EXV includes the content of IEC 60704-2-15:2024, and the references made to IEC 60704-1:2021.

The specific content of IEC 60704-2-15:2024 is displayed on a blue background.

AVA Documents
Document Sharing Hub

Full document details: IEC 60704-2-15 2024 EXV

IEC 60704-2-15 has been prepared by IEC subcommittee 59L: Small household appliances, of IEC technical committee 59: Performance of household and similar electrical appliances. It is an International Standard.

This first edition cancels and replaces the first edition of IEC/PAS 60704-2-15, published in 2008. This edition constitutes a technical revision.

This edition includes the following significant technical changes with respect to IEC/PAS 60704-2-15:2008:

a) measurement uncertainty and standard deviations have been reviewed;
b) definitions of standard test programme and standard test load have been reviewed;
c) definition of the test enclosure has been reviewed;
d) additional microphone position for test in free field environment;
e) information to be reported has been reviewed;
f) aligned to IEC 60704-1:2021.

The text of this International Standard is based on the following documents:

Draft	Report on voting
59L/252/CDV	59L/264/RVC

Full information on the voting for its approval can be found in the report on voting indicated in the above table.

The language used for the development of this International Standard is English.

This document was drafted in accordance with ISO/IEC Directives, Part 2, and developed in accordance with ISO/IEC Directives, Part 1 and ISO/IEC Directives, IEC Supplement, available at www.iec.ch/members_experts/refdocs. The main document types developed by IEC are described in greater detail at www.iec.ch/publications.

This Part 2-15 is intended to be used in conjunction with the fourth edition of IEC 60704-1:2021, *Household and similar electrical appliances – Test code for the determination of airborne acoustical noise – Part 1: General requirements*.

The relevant text of IEC 60704-1:2021 as amended by this publication establishes the test code for household food waste disposers.

This document supplements or modifies the corresponding clauses in IEC 60704-1:2021. When a particular subclause of IEC 60704-1:2021 is not mentioned in this document, that subclause is applicable as far as reasonable. Where this standard states "addition", "modification" or "replacement", the relevant requirements, test specifications or explanatory matter in IEC 60704-1:2021 are to be adapted accordingly.

Subclauses, tables and figures that are additional to those in IEC 60704-1:2021 are numbered starting from 101. Additional annexes are lettered AA, BB, etc.

Unless notes are in a new subclause or involve notes in IEC 60704-1:2021, they are numbered starting from 101, including those in a replaced clause or subclause.

In this standard, the following print types are used:

- terms defined in Clause 3: **bold type**.

Documents
Document Sharing Hub

Full document details: IEC 60704-2-15 2024 EXV

A list of all parts in the IEC 60704 series, published under the general title *Household and similar electrical appliances – Test code for the determination of airborne acoustical noise*, can be found on the IEC website.

The committee has decided that the contents of this document will remain unchanged until the stability date indicated on the IEC website under webstore.iec.ch in the data related to the specific document. At this date, the document will be

- reconfirmed,
- withdrawn, or
- revised.

IMPORTANT – The "colour inside" logo on the cover page of this document indicates that it contains colours which are considered to be useful for the correct understanding of its contents. Users should therefore print this document using a colour printer.

Documents
Document Sharing Hub

Full document details: IEC 60704-2-15 2024 EXV

INTRODUCTION to IEC 60704-1:2021

Although the noise emitted by household appliances does not generally present a hazard to the hearing of the operator and other exposed persons, the need for standardization procedures for the determination of the noise emitted has been recognized for a long time. Such procedures should be specified, not only for special types of appliances, but also the principles should be applicable to the majority of appliances in general use.

Generally, the determination of noise levels is only part of a comprehensive testing procedure covering many aspects of the properties and performances of the appliance. It is therefore important that the requirements for noise measurements (such as test environment, instrumentation, and amount of labour involved) be kept at a modest level.

The results of noise measurements are used for many purposes, for example for noise declaration, as well as for comparing the noise emitted by a specific appliance to the noise emitted by other appliances of the same family. In other cases, the results are taken as a basis for engineering action in the development stages of new pieces of equipment, or in deciding on means for sound insulation. For all purposes, it is important to specify procedures with known accuracy so that the results of measurements taken by different laboratories can be compared.

These conditions have, as far as possible, been taken into account in the preparation of this test code. The acoustic measuring methods are based on those described in ISO 3743-1:2010, ISO 3743-2:2018 and ISO 3744:2010.

The adoption of these methods permits the use of hemi-anechoic rooms, special reverberation test rooms and hard-walled test rooms. The result of the measurements is the sound power level of the appliance. Within the measuring uncertainty specific to these methods, the results from the determination under free field conditions over a reflecting plane are equal to those obtained in reverberant fields.

The use of intensity methods as described in ISO 9614-1:1993, ISO 9614-2:1996, and ISO 9614-3:2002 is applicable under special conditions, which are described in specific parts of the IEC 60704-2 series.

This test code is concerned with airborne noise only. In some cases, structure-borne noise, for example transmitted to the adjoining room, can be of importance.

Documents
Document Sharing Hub

Full document details: IEC 60704-2-15 2024 EXV

INTRODUCTION to IEC 60704-2-15:2024

The noise of food waste disposers has been measured up to now by making use of IEC/PAS 60704-2-15[1].

The measuring conditions specified in this document provide for sufficient accuracy in determining the noise emitted and comparing the results of measurements taken by different laboratories, whilst simulating as far as possible the practical use of food waste disposers.

It is recommended to consider the determination of noise levels as part of a comprehensive testing procedure covering many aspects of the properties and performance of food waste disposers.

NOTE As stated in the introduction to IEC 60704-1:2021, this test code is concerned with airborne noise only.

[1] This publication has been withdrawn.

Documents
Document Sharing Hub

Full document details: IEC 60704-2-15 2024 EXV

HOUSEHOLD AND SIMILAR ELECTRICAL APPLIANCES – TEST CODE FOR THE DETERMINATION OF AIRBORNE ACOUSTICAL NOISE –

Part 2-15: Particular requirements for household food waste disposers

1 Scope

These particular requirements apply to single unit electric food waste disposers for household use, with or without automatic programme control, for cold water supply, for permanent connection to water supply and sewage systems, intended for connection to the kitchen sink drain and contained within a kitchen cabinet enclosure.

Food waste disposers for restaurants, hotels and industry purposes are excluded.

NOTE For determining and verifying noise emission values declared in the product specification, see IEC 60704-3.

2 Normative references

The following documents are referred to in the text in such a way that some or all of their content constitutes requirements of this document. For dated references, only the edition cited applies. For undated references, the latest edition of the referenced document (including any amendments) applies.

IEC 60704-2 (all parts), *Household and similar electrical appliances – Test code for the determination of airborne acoustical noise*

IEC 60704-3:2019, *Household and similar electrical appliances – Test code for the determination of airborne acoustical noise – Part 3: Procedure for determining and verifying declared noise emission values*

IEC 61260-1:2014, *Electroacoustics – Octave-band and fractional-octave-band filters – Part 1: Specifications*

IEC 61672-1:2013, *Electroacoustics – Sound level meters – Part 1: Specifications*

ISO 3743-1:2010, *Acoustics – Determination of sound power levels of noise sources – Engineering methods for small, movable sources in reverberant fields – Part 1: Comparison method for hard-walled test rooms*

ISO 3743-2:2018, *Acoustics – Determination of sound power levels of noise sources using sound pressure – Engineering methods for small, movable sources in reverberant fields – Part 2: Methods for special reverberation test rooms*

ISO 3744:2010, *Acoustics – Determination of sound power levels of noise sources using sound pressure – Engineering method in an essentially free field over a reflecting plane*

ISO 9614-1:1993, *Acoustics – Determination of sound power levels of noise sources using sound intensity – Part 1: Measurement at discrete points*

ISO 9614-2:1996, *Acoustics – Determination of sound power levels of noise sources using sound intensity – Part 2: Measurement by scanning*

AVA Documents
Document Sharing Hub

Full document details: IEC 60704-2-15 2024 EXV

ISO 9614-3:2002, *Acoustics – Determination of sound power levels of noise sources using sound intensity – Part 3: Precision method for measurement by scanning*

ISO 6926:2016, *Acoustics – Requirements for the performance and calibration of reference sound sources used for the determination of sound power levels*

ISO 12001:1996, *Acoustics – Noise emitted by machinery and equipment – Rules for the drafting and presentation of a noise test code*

ANSI/ASME A112.19.3-2022, *Stainless Steel Plumbing Fixtures*

3 Terms and definitions

For the purposes of this document, the following terms and definitions apply. Terms and definitions pertinent to the determination of sound power levels can be found in ISO 3743-1:2010, ISO 3743-2:2018 and ISO 3744:2010.

ISO and IEC maintain terminological databases for use in standardization at the following addresses:

- IEC Electropedia: available at http://www.electropedia.org/
- ISO Online browsing platform: available at http://www.iso.org/obp

3.1
measurement time interval
portion or a multiple of an operational period or operational cycle for which the sound power levels are determined

3.2
operational period
interval of time during which a specified process is accomplished by the appliance under test (for example, washing or rinsing or drying for a dishwasher)

3.3
operational cycle
specific sequence of operational periods occurring while the appliance under test performs a complete work cycle

Note 1 to entry: During the operational cycle, each operational period is associated with a specific process that can occur only once, or can be repeated (for example, washing and rinsing and drying for a dishwasher).

3.4
time history
continuous recording of the sound pressure level (for a distinct microphone position) as a function of time, which is obtained during one or more operational periods of an operational cycle

3.5
reference box
hypothetical right parallelepiped terminating on the reflecting plane(s) on which the noise source under test is located, that just encloses the source including all the significant sound radiating components and any test table on which the source is mounted

[SOURCE: ISO 3744:2010, 3.10, modified – The note has been omitted.]

3.6
test enclosure
enclosure used for simulating the typical acoustic built-in or/and mounting conditions

Documents
Document Sharing Hub
Full document details: IEC 60704-2-15 2024 EXV

3.101
batch feed operation
method of operation in which the operator loads the food waste into the container body

3.102
standard hard test load
rigid standard test load for noise measurements

4 Measurement methods and acoustical environments

4.1 General

This document is concerned with objective methods of engineering accuracy grade 2 in accordance with ISO 12001:1996 for determining sound power levels L_W, expressed in decibels (dB), with reference to a sound power of one picowatt (1 pW), of airborne acoustical noise within the specified frequency range of interest (generally including the octave-bands with centre frequencies from 125 Hz to 8 000 Hz), and for prescribed operating conditions of the appliance to be measured.

Methods for determining sound power levels with precision accuracy grade 1 in accordance with ISO 12001:1996, as specified for example in ISO 3741 and ISO 3745, are not included in this document. They may, however, be applied if the appropriate test environment and instrumentation are available.

The methods specified in ISO 3743-1, ISO 3743-2 and ISO 3744 can be used for measuring noise emitted by food waste disposers.

NOTE 1 The noise values obtained under the described conditions of this document will not necessarily correspond to the noise experienced under the operational conditions of practical use.

NOTE 2 For quality control during production etc., simplified methods can be appropriate. For noise reduction purposes, other measurement methods employing, for example, narrow-band analysis or intensity techniques usually have to be applied. These methods are not covered by this document.

The total noise emitted by machinery or equipment and radiated in all directions to the space surrounding the machine can be characterized by the sound power of the machine. Within the accuracy range of this document, the sound power of a machine is basically independent of the environment in which the machine is installed

Therefore, the concept of sound power level has been chosen for expressing the noise emission of appliances for household and similar purposes.

The preferred noise emission quantity is the A-weighted sound power level, L_{WA}, in dB (re 1 pW).

According to this document, two principal methods exist, the direct method and the comparison method, as described in 4.2 and 4.3. These two methods can be used alternatively.

Different types of environments, as described in 4.4, may be used. A part of the IEC 60704-2 series may, if necessary, exclude one or several combinations among those available.

4.2 Direct method

The direct method can be used only for measurements in qualified test environments in accordance with ISO 3744:2010 for free field conditions over reflecting plane(s), and in accordance with ISO 3743-2:2018 for special reverberation test rooms.

With this method, the sound power level is determined

Documents
Document Sharing Hub
Full document details: IEC 60704-2-15 2024 EXV

– in free field conditions over reflecting plane(s), from time-averaged sound pressure levels (on a mean-square basis) over the measurement surface and from the area of the measurement surface, S, or

– in reverberation and special reverberation test rooms, from averaged sound pressure levels, and from the reverberation time and the volume of the test room.

If for a measurement in a free field, reverberation or special reverberation room is not possible because the appliance cannot be placed or operated in such an environment, the intensity method in accordance with ISO 9614-1:1993, ISO 9614-2:1996, and ISO 9614-3:2002 shall be applied. For the intensity method, the standard deviations given in the parts of the IEC 60704-2 series and IEC 60704-3:2019 are not applicable unless stated explicitly.

These methods yield results expressed in A-weighted sound power levels (and in octave- or 1/3 octave-band sound power levels, if required) that are calculated directly from measured sound pressure levels.

NOTE This method can also be used in conjunction with more precise methods, such as those given in ISO 3741 and ISO 3745.

If pure tone components are present in the noise emitted, proper precautions shall be taken as specified in ISO 3743-2.

4.3 Comparison method

The comparison method for measurement is explicitly described in ISO 3743-1:2010 and in ISO 3743-2:2018.

NOTE The term "comparison method" is not explicitly given in ISO 3744:2010, but when applying the "absolute comparison test" for the determination of the environmental correction given in A.3 of ISO 3744:2010, by using a reference sound source, the procedure is, in fact, a comparison method.

With this method, the sound power level is determined by comparing the averaged values (on a mean-square basis) of the sound pressure levels produced by the source in the test room to the averaged values of the sound pressure levels produced in the same room by a calibrated reference sound source (RSS) of known sound power output, complying with the requirements of ISO 6926:2016. The difference in sound pressure levels is equal to the difference in sound power levels when conditions are the same for both sets of measurements.

This method yields results expressed in octave- or 1/3 octave-band sound power levels, and the A-weighted sound power level is calculated from the octave- or 1/3 octave-band sound power levels.

To check whether there is a systematic difference between results obtained in different environments, the use of the comparison method is recommended.

If pure tone components are present in the noise emitted, proper precautions shall be taken as specified in ISO 3743-1 and ISO 3743-2.

4.4 Acoustical environments

4.4.1 General requirements and criterion for adequacy of the test environment

They are given in the following clauses:

– Clause 4 of ISO 3743-1:2010 for hard-walled test rooms;

– Clause 5 of ISO 3743-2:2018 for special reverberation test rooms and

– Clause 4 of ISO 3744:2010 for free-field conditions over a reflecting plane.

A classification of different types of noise is given in ISO 12001:1996. The method specified in ISO 3744:2010 is suitable for measurements of all types of noise emitted by household

AVA Documents Document Sharing Hub

appliances. The methods specified in ISO 3743-1:2010 and ISO 3743-2:2018 are suitable for all types of noise, except for sources of impulsive noise consisting of short-duration noise bursts. This will be taken into account in the preparation of parts of the IEC 60704-2 series.

The method specified in ISO 3744 is applicable to noise sources of any size. When applying ISO 3743-1 and ISO 3743-2, it shall be ensured that the maximum size of the cabinet enclosing the food waste disposer under test fulfils the requirements specified in ISO 3743-1:2010, 4.2, and ISO 3743-2:2018, Clause 5.

NOTE For free-field conditions over a reflecting plane, the absolute comparison test for the qualification of the environment, described in Clause A.2 of ISO 3744:2010, is preferred.

Guidelines for the design of simple test rooms with free-field conditions are given in Annex C.

Guidelines for the design of a suitable special reverberation test room are given in ISO 3743-2:2018, Annex A.

4.4.2 Criterion for background noise level

Requirements for the background noise level are given in 4.5 of ISO 3743-1:2010, in 6.5 of ISO 3743-2:2018 and in 4.2 of ISO 3744:2010. Averaged over the microphone positions, the background noise level shall be at least 6 dB below, and preferably more than 15 dB below, the sound pressure level to be measured.

NOTE If the difference between the sound pressure levels of the background noise and the appliance noise is less than 6 dB, see 8.2.

4.4.3 Environmental conditions

Environmental conditions having an adverse effect on the microphone used for the measurements (for example, strong electric or magnetic fields, wind, impingement of air discharge from the equipment being tested, high or low temperatures) shall be avoided by proper selection or positioning of the microphone.

The instructions of the manufacturers of the measurement instruments regarding adverse environmental conditions shall be followed. The microphone shall always be oriented in such a way that the angle of incidence of the sound waves is that for which the microphone is calibrated.

4.5 Measurement uncertainties

4.5.1 General

The estimated values of the standard deviations of reproducibility of sound power levels determined in accordance with this document are given in 9.1 of ISO 3743-1:2010, in 11.1 of ISO 3743-2:2018 and in 9.1 of ISO 3744:2010. But for a particular family of appliances of similar size with similar operating conditions, the standard deviations of reproducibility can be smaller than these values. Hence, in the IEC 60704-2 series, standard deviations smaller than those listed in ISO standards can be stated if substantiation is available from the results of suitable interlaboratory tests.

In the case of discrepancies between the measurements where the results normally remain inside the foreseen standard deviation, it can be helpful to perform measurements according to the upper grade of accuracy: grade 1, laboratory or precision, as described in ISO 3741 or ISO 3745.

4.5.2 Standard deviations on repeatability and reproducibility and standard deviations related to declaration and verification

The estimated values of standard deviations of sound power levels determined in accordance with this document are currently not available.

AVA Documents
Document Sharing Hub

Full document details: IEC 60704-2-15 2024 EXV

For the purpose of determining and verifying declared noise emission values for food waste disposers in accordance with IEC 60704-3, the value σ_M is 2,5 dB.

5 Instrumentation

5.1 Instrumentation for measuring acoustical data

Requirements for the instrumentation system and for its calibration are given in Clause 5 of ISO 3743-1:2010, in Clause 7 of ISO 3743-2:2018 and in Clause 5 of ISO 3744:2010.

The instrumentation system shall meet the requirements for a type 1 instrument laid down in IEC 61672-1:2013, in accordance with the basic standard used. For measurements in octave- and 1/3 octave-bands, the instrumentation system shall meet the requirements of IEC 61260-1:2014.

RSS shall meet the requirements of ISO 6926:2016, and shall be calibrated annually.

5.2 Instrumentation for measuring climatic conditions

5.2.1 The temperature is determined with instruments having an accuracy of ±1 °C.

5.2.2 The relative humidity is determined with instruments having an absolute accuracy of ±2 % within the measuring range.

5.2.3 The absolute air pressure is determined with instruments having an accuracy of ±0,5 kPa.

5.3 Instrumentation for measuring operating conditions

5.3.1 The voltage at the plug of the cable or cord of mains-powered appliances is measured with voltmeters having an accuracy of class 0,5 instruments.

5.3.2 The voltage at the battery terminals of battery-powered appliances is measured with voltmeters having an accuracy of class 0,5 instruments.

5.3.3 The rotational speed of motors, attachments, etc. is measured, if necessary, with speed indicators having an accuracy of ±1 % of full scale.

6 Operation and location of appliances under test

6.1 Equipping and pre-conditioning of appliances

6.1.1 The appliance is equipped with attachments, accessories, etc. as delivered by the manufacturer for the intended use or function.

6.1.2 Care shall be taken to ensure that any auxiliary equipment (such as electrical conduits or cables, piping for water supply or drainage, air ducts, etc.) necessary for the operation of the appliance, does not radiate a significant amount of sound into the test environment or change the sound output of the appliance. Guidelines are given in 6.2 of ISO 3743-1:2010, in 8.4 of ISO 3743-2:2018 and in 6.2 ISO 3744:2010.

6.1.3 Prior to commencing measurements, the inside of the grind chamber shall be clean and free of any debris from prior operation. The food waste disposer shall be run through 10 complete operational cycles, of a 30 s duration, with a **standard hard test load** (3.102).

6.1.4 Not applicable.

Documents
Document Sharing Hub
Full document details: IEC 60704-2-15 2024 EXV

6.2 Supply of electric energy and of water or gas

6.2.1 The supply voltage is measured at the plug of a non-detachable cable or cord, at the appliance inlet if a detachable cord is provided or no cable is provided, but in no case at the entrance of extensions cables or cords.

6.2.2 Not applicable.

6.2.3 Not applicable.

6.2.4 The temperature of the supply water shall be between 4 °C and 27 °C.

The flow rate of the water supply shall be 6 l/min ± 0,3 l/min. The water faucet shall be positioned in such a way that the water flows down the side of the sink into the drain, creating negligible water splash noise.

6.3 Climatic conditions

In general, household appliances (unless otherwise specified for a special family) are operated under the following climatic conditions:

ambient temperature	18 °C to 28 °C
relative humidity	25 % to 70 %
atmospheric pressure	86 kPa to 106 kPa

6.4 Loading and operating of appliances during tests

6.4.1 General requirements are given in 6.5 of ISO 3743-1:2010, in 8.5 of ISO 3743-2:2018 and in 6.6 of ISO 3744:2010. For the purpose of establishing a noise test code, the following guidelines are given, unless otherwise specified in the relevant part of the IEC 60704-2 series.

In general, the loading and operating conditions should, as far as practicable, simulate normal use but, in every case, preference has to be given to simple conditions providing satisfactory repeatability and reproducibility.

The presence of an operator should be avoided. An operator shall be present only if the application of the load is not practicable without an operator. This operator shall not wear abnormally sound absorptive clothing that might influence the sound measurements.

6.4.2 In **batch feed operation** the food waste is loaded in the container body (see Figure 101) prior to starting the water flow and then the operational cycle of the disposer.

The **standard hard test load** consists of fifteen (15) 12,7 mm (0,5 in) diameter nylon 6/6 solid balls. This grind media shall be conditioned by soaking in water for seven days prior to use.

The test load shall be at room temperature when the test programme starts.

The appliance under test shall be at room temperature when the test programme starts.

The appliance shall be operated according to 3.101 using the test load as described in 3.102. If an operator has to be present to place the test load in the grind chamber and to start and stop the operational cycle of the disposer, the operator's position shall be chosen to minimize the influence upon the acoustic measurement and shall be consistent for all tests. A switch may be used to start and stop the operational cycle and minimize the influence of the operator on the measurements.

Documents
Document Sharing Hub
Full document details: IEC 60704-2-15 2024 EXV

Upon completion of the measurements, the remaining material in the grind chamber is to be removed and the disposer flushed with water to ensure no material remains. An auditory check shall be made of the unit running without any water or load to ensure that no material remains in the grind chamber. Ensure that no test load remains on the top lip of the grind chamber.

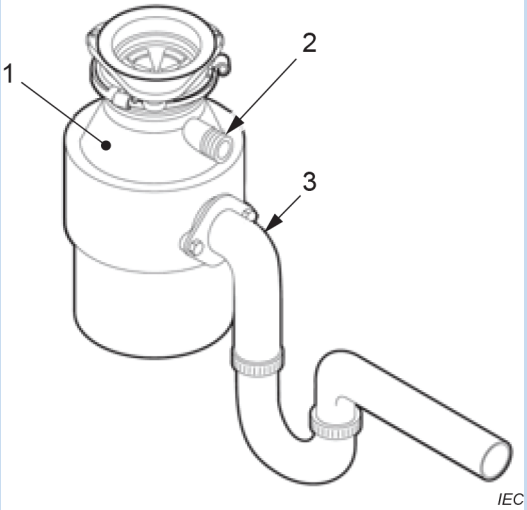

Key:

1 container body (grind chamber)

2 dishwasher inlet

3 discharge (to the sewer lines)

Figure 101 – Food waste disposer

6.4.3 Appliances operated during normal use in operational cycles are operated likewise for determining noise emission, taking measurements during appropriate parts of the operational cycles of the main functions.

It is recommended to record the A-weighted sound pressure level during the operational cycle(s) – time history – at one of the microphone positions, preferably in front of the appliance to be tested.

6.4.4 When applying loading and operating conditions for determining noise emission, care shall be taken to avoid possible overheating of the appliance under test. Rated operating and resting times and/or the manufacturer's instructions shall be followed.

6.5 Location and mounting of appliances

6.5.1 The basic requirements in 6.3 and 6.4 of ISO 3743-1:2010, in 8.2 and 8.3 of ISO 3743-2:2018 and in 6.3 and 6.4 of ISO 3744:2010 shall be followed. The following guidelines are given, unless otherwise specified in the relevant part of the IEC 60704-2 series.

Documents
Document Sharing Hub

Full document details: IEC 60704-2-15 2024 EXV