IEC 60715

Edition 2.0 2017-07

INTERNATIONAL STANDARD

NORME INTERNATIONALE

HORIZONTAL STANDARD

NORME HORIZONTALE

Dimensions of low-voltage switchgear and controlgear – Standardized mounting on rails for mechanical support of switchgear, controlgear and accessories

Dimensions de l'appareillage à basse tension – Montage normalisé sur profilés-supports pour le support mécanique des appareillages et de leurs accessoires

IEC 60715:2017-07(en-fr)

Documents
Document Sharing Hub

Full document details: IEC 60715 2017

THIS PUBLICATION IS COPYRIGHT PROTECTED

Copyright © 2017 IEC, Geneva, Switzerland

All rights reserved. Unless otherwise specified, no part of this publication may be reproduced or utilized in any form or by any means, electronic or mechanical, including photocopying and microfilm, without permission in writing from either IEC or IEC's member National Committee in the country of the requester. If you have any questions about IEC copyright or have an enquiry about obtaining additional rights to this publication, please contact the address below or your local IEC member National Committee for further information.

Droits de reproduction réservés. Sauf indication contraire, aucune partie de cette publication ne peut être reproduite ni utilisée sous quelque forme que ce soit et par aucun procédé, électronique ou mécanique, y compris la photocopie et les microfilms, sans l'accord écrit de l'IEC ou du Comité national de l'IEC du pays du demandeur. Si vous avez des questions sur le copyright de l'IEC ou si vous désirez obtenir des droits supplémentaires sur cette publication, utilisez les coordonnées ci-après ou contactez le Comité national de l'IEC de votre pays de résidence.

IEC Central Office
3, rue de Varembé
CH-1211 Geneva 20
Switzerland

Tel.: +41 22 919 02 11
Fax: +41 22 919 03 00
info@iec.ch
www.iec.ch

About the IEC
The International Electrotechnical Commission (IEC) is the leading global organization that prepares and publishes International Standards for all electrical, electronic and related technologies.

About IEC publications
The technical content of IEC publications is kept under constant review by the IEC. Please make sure that you have the latest edition, a corrigenda or an amendment might have been published.

IEC Catalogue - webstore.iec.ch/catalogue
The stand-alone application for consulting the entire bibliographical information on IEC International Standards, Technical Specifications, Technical Reports and other documents. Available for PC, Mac OS, Android Tablets and iPad.

IEC publications search - www.iec.ch/searchpub
The advanced search enables to find IEC publications by a variety of criteria (reference number, text, technical committee,…). It also gives information on projects, replaced and withdrawn publications.

IEC Just Published - webstore.iec.ch/justpublished
Stay up to date on all new IEC publications. Just Published details all new publications released. Available online and also once a month by email.

Electropedia - www.electropedia.org
The world's leading online dictionary of electronic and electrical terms containing 20 000 terms and definitions in English and French, with equivalent terms in 16 additional languages. Also known as the International Electrotechnical Vocabulary (IEV) online.

IEC Glossary - std.iec.ch/glossary
65 000 electrotechnical terminology entries in English and French extracted from the Terms and Definitions clause of IEC publications issued since 2002. Some entries have been collected from earlier publications of IEC TC 37, 77, 86 and CISPR.

IEC Customer Service Centre - webstore.iec.ch/csc
If you wish to give us your feedback on this publication or need further assistance, please contact the Customer Service Centre: csc@iec.ch.

A propos de l'IEC
La Commission Electrotechnique Internationale (IEC) est la première organisation mondiale qui élabore et publie des Normes internationales pour tout ce qui a trait à l'électricité, à l'électronique et aux technologies apparentées.

A propos des publications IEC
Le contenu technique des publications IEC est constamment revu. Veuillez vous assurer que vous possédez l'édition la plus récente, un corrigendum ou amendement peut avoir été publié.

Catalogue IEC - webstore.iec.ch/catalogue
Application autonome pour consulter tous les renseignements bibliographiques sur les Normes internationales, Spécifications techniques, Rapports techniques et autres documents de l'IEC. Disponible pour PC, Mac OS, tablettes Android et iPad.

Recherche de publications IEC - www.iec.ch/searchpub

La recherche avancée permet de trouver des publications IEC en utilisant différents critères (numéro de référence, texte, comité d'études,…). Elle donne aussi des informations sur les projets et les publications remplacées ou retirées.

IEC Just Published - webstore.iec.ch/justpublished

Restez informé sur les nouvelles publications IEC. Just Published détaille les nouvelles publications parues. Disponible en ligne et aussi une fois par mois par email.

Electropedia - www.electropedia.org

Le premier dictionnaire en ligne de termes électroniques et électriques. Il contient 20 000 termes et définitions en anglais et en français, ainsi que les termes équivalents dans 16 langues additionnelles. Egalement appelé Vocabulaire Electrotechnique International (IEV) en ligne.

Glossaire IEC - std.iec.ch/glossary
65 000 entrées terminologiques électrotechniques, en anglais et en français, extraites des articles Termes et Définitions des publications IEC parues depuis 2002. Plus certaines entrées antérieures extraites des publications des CE 37, 77, 86 et CISPR de l'IEC.

Service Clients - webstore.iec.ch/csc

Si vous désirez nous donner des commentaires sur cette publication ou si vous avez des questions contactez-nous: csc@iec.ch.

Documents
Document Sharing Hub

Full document details: IEC 60715 2017

IEC 60715

Edition 2.0 2017-07

INTERNATIONAL STANDARD

NORME INTERNATIONALE

HORIZONTAL STANDARD
NORME HORIZONTALE

Dimensions of low-voltage switchgear and controlgear – Standardized mounting on rails for mechanical support of switchgear, controlgear and accessories

Dimensions de l'appareillage à basse tension – Montage normalisé sur profilés-supports pour le support mécanique des appareillages et de leurs accessoires

INTERNATIONAL
ELECTROTECHNICAL
COMMISSION

COMMISSION
ELECTROTECHNIQUE
INTERNATIONALE

ICS 29.130.20

ISBN 978-2-8322-4646-7

Warning! Make sure that you obtained this publication from an authorized distributor.
Attention! Veuillez vous assurer que vous avez obtenu cette publication via un distributeur agréé.

® Registered trademark of the International Electrotechnical Commission
Marque déposée de la Commission Electrotechnique Internationale

AVA Documents
Document Sharing Hub

Full document details: IEC 60715 2017

CONTENTS

FOREWORD 4
INTRODUCTION 6
1 Scope 7
2 Normative references 7
3 Terms and definitions 8
4 Functional requirements 8
5 Standard dimensions 8
5.1 General 8
5.2 Top hat section 9
5.3 "C" section 10
5.4 "G" section 13
Annex A (normative) Specific steel mounting rails 14
A.1 General 14
A.2 Top hat section rail TH 15-5,5 14
A.2.1 Dimensions 14
A.2.2 Tolerances 15
A.3 Top hat section rail TH 35-7,5 and TH 35-15 15
A.3.1 Dimensions 15
A.3.2 Tolerances 16
A.4 Top hat section rail TH 75-25 16
A.4.1 Dimensions 16
A.4.2 Tolerances 17
A.5 "C" section rails: C 20, C 30, C 40 and C 50 17
A.5.1 Dimensions 17
A.5.2 Tolerance 18
A.6 "G" section rail: G 32 18
A.6.1 Dimensions 18
A.6.2 Tolerances 19
Annex B (informative) Application guide 20
B.1 General 20
B.2 Guidance for use of top hat rails 20
B.2.1 For steel rails in Annex A 20
B.2.2 For rails other than steel rails 23
B.3 Guidance for use of "C" section rails 23
B.3.1 General 23
B.3.2 For steel rails to Annex A 23
B.3.3 For rails other than steel rails 27
Bibliography 28

Figure 1 – Mounting rail TH 15 9
Figure 2 – Mounting rail TH 35 9
Figure 3 – Mounting rail TH 75 10
Figure 4 – Mounting rail C 20 10
Figure 5 – Mounting rail C 30 11
Figure 6 – Mounting rail C 40 11

AVA Documents
Document Sharing Hub
Full document details: IEC 60715 2017

Figure 7 – Mounting rail C 50 12
Figure 8 – Mounting rail G 32 13
Figure A.1 – Top hat rails 15 mm wide for snap-on mounting of equipment 15
Figure A.2 – Tolerances (TH 15-5,5) 15
Figure A.3 – Top hat rails 35 mm wide for snap-on mounting of equipment 16
Figure A.4 – Tolerances (TH 35-7,5 and TH 35-15) 16
Figure A.5 – Top hat rail 75 mm wide for snap-on mounting of equipment 17
Figure A.6 – Tolerances (TH 75-25) 17
Figure A.7 – "C" section rails 18
Figure A.8 – Tolerances (C 20, C 30, C 40 and C 50) 18
Figure A.9 – Dimensions of "G" section rails 19
Figure A.10 – Tolerances (G 32) 19
Figure B.1 – Assessment of rail deflection 21
Figure B.2 – Permissible load capacity $M_E = f(L,h)$ 22
Figure B.3 – Permissible load capacity $M_E = f(L,h)$ 23
Figure B.4 – Assessment of rail deflection 24
Figure B.5 – Permissible load capacity $M_E = f(L)$ 25
Figure B.6 – Assembly of two identical "C" section rails Assessment of the deflection 26
Figure B.7 – Assembly of two identical "C" section rails Permissible stress $M_E = f(L)$ for H = 100 mm 27

Table A.1 – Dimensions of “C” section rails 18
Table B.1 – Maximum torque M_{max} 24

Documents
Document Sharing Hub
Full document details: IEC 60715 2017

INTERNATIONAL ELECTROTECHNICAL COMMISSION

DIMENSIONS OF LOW-VOLTAGE SWITCHGEAR AND CONTROLGEAR – STANDARDIZED MOUNTING ON RAILS FOR MECHANICAL SUPPORT OF SWITCHGEAR, CONTROLGEAR AND ACCESSORIES

FOREWORD

1) The International Electrotechnical Commission (IEC) is a worldwide organization for standardization comprising all national electrotechnical committees (IEC National Committees). The object of IEC is to promote international co-operation on all questions concerning standardization in the electrical and electronic fields. To this end and in addition to other activities, IEC publishes International Standards, Technical Specifications, Technical Reports, Publicly Available Specifications (PAS) and Guides (hereafter referred to as "IEC Publication(s)"). Their preparation is entrusted to technical committees; any IEC National Committee interested in the subject dealt with may participate in this preparatory work. International, governmental and non-governmental organizations liaising with the IEC also participate in this preparation. IEC collaborates closely with the International Organization for Standardization (ISO) in accordance with conditions determined by agreement between the two organizations.
2) The formal decisions or agreements of IEC on technical matters express, as nearly as possible, an international consensus of opinion on the relevant subjects since each technical committee has representation from all interested IEC National Committees.
3) IEC Publications have the form of recommendations for international use and are accepted by IEC National Committees in that sense. While all reasonable efforts are made to ensure that the technical content of IEC Publications is accurate, IEC cannot be held responsible for the way in which they are used or for any misinterpretation by any end user.
4) In order to promote international uniformity, IEC National Committees undertake to apply IEC Publications transparently to the maximum extent possible in their national and regional publications. Any divergence between any IEC Publication and the corresponding national or regional publication shall be clearly indicated in the latter.
5) IEC itself does not provide any attestation of conformity. Independent certification bodies provide conformity assessment services and, in some areas, access to IEC marks of conformity. IEC is not responsible for any services carried out by independent certification bodies.
6) All users should ensure that they have the latest edition of this publication.
7) No liability shall attach to IEC or its directors, employees, servants or agents including individual experts and members of its technical committees and IEC National Committees for any personal injury, property damage or other damage of any nature whatsoever, whether direct or indirect, or for costs (including legal fees) and expenses arising out of the publication, use of, or reliance upon, this IEC Publication or any other IEC Publications.
8) Attention is drawn to the Normative references cited in this publication. Use of the referenced publications is indispensable for the correct application of this publication.
9) Attention is drawn to the possibility that some of the elements of this IEC Publication may be the subject of patent rights. IEC shall not be held responsible for identifying any or all such patent rights.

International Standard IEC 60715 has been prepared by subcommittee 121A: Low-voltage switchgear and controlgear, of IEC technical committee 121: Switchgear and controlgear and their assemblies for low voltage.

This second edition cancels and replaces the first edition published in 1981 and Amendment 1:1995. This edition constitutes a technical revision.

This edition includes the following significant technical changes with respect to the previous edition:

a) the electrical function of the rail for protective earthing is covered by the relevant product standard.
b) The document has been editorially updated to bring it into compliance with the ISO/IEC Directives, Part 2:2016, and drawings have been updated to bring them in compliance with ISO tolerancing and drawing standards.

AVA Documents
Document Sharing Hub

Full document details: IEC 60715 2017

It has the status of a horizontal standard in accordance with IEC Guide 108.

The text of this International Standard is based on the following documents:

FDIS	Report on voting
121A/153/FDIS	121A/163/RVD

Full information on the voting for the approval of this International Standard can be found in the report on voting indicated in the above table.

This document has been drafted in accordance with the ISO/IEC Directives, Part 2.

The committee has decided that the contents of this document will remain unchanged until the stability date indicated on the IEC website under "http://webstore.iec.ch" in the data related to the specific document. At this date, the document will be

- reconfirmed,
- withdrawn,
- replaced by a revised edition, or
- amended.

Documents
Document Sharing Hub

Full document details: IEC 60715 2017

INTRODUCTION

This document is provided as a horizontal standard. It is necessary to define standardized mounting on rails for mechanical support of low-voltage switchgear and controlgear, electrical accessories, and similar devices.

The user wants them to be easy to fix, remove and rearrange.

Two methods are used for fixing a device on a rail:

– either directly by clipping on the rail (this method is particularly suitable for "top hat" rails or "G" rails);
– or by means of a variety of accessories such as sliding nuts and hooked or T-headed bolts (this method is particularly suitable for "C" rails).

In the case of "G" rails, the first of these methods has been mainly used for mounting terminal blocks which snap in and out of position and are clamped in rows by adjustable end stops.

The rail can take the form of a standard section as an integral part of the enclosure.

Rails are also available of composite sections that combine, for example, "top hat" and "C" section sizes thus accepting devices with various arrangements for mounting.

One or more rails can be used as necessary for fixing devices.

Since rail mounting can affect the performance of equipment, it can be advisable for equipment manufacturers to give guidance in their literature on the suitability for this form of mounting.

Documents
Document Sharing Hub
Full document details: IEC 60715 2017

DIMENSIONS OF LOW-VOLTAGE SWITCHGEAR AND CONTROLGEAR – STANDARDIZED MOUNTING ON RAILS FOR MECHANICAL SUPPORT OF SWITCHGEAR, CONTROLGEAR AND ACCESSORIES

1 Scope

This document specifies dimensional and functional requirements for the compatible mounting of switchgear, controlgear and accessories on some types of rails.

The object of this document is to specify those dimensions that are critical for the correct design of mounting rails and equipment.

The following sections are covered by this document:

– "top hat" section;
– "C" section;
– "G" section.

NOTE 1 Mounting compatibility does not imply functional interchangeability.

Annexes deal with specific steel mounting rails satisfying the requirements of this document, and give additional dimensional data and loading requirements applicable to such rails.

NOTE 2 The detailed design and material of specific steel rails is given in the annexes.

NOTE 3 Other shapes of rails complying with this document not listed in Annex A can be used.

Mounting rails used as a protective conductor using a conducting connection to a protective conductor terminal block are specified in IEC 60947-7-2. In other applications where the mounting rail is used as earthing conductor, the relevant product standard applies.

This document has the status of a horizontal standard in accordance with IEC Guide 108:2006.

This horizontal standard is primarily intended for use by technical committees in the preparation of standards in accordance with the principles laid down in IEC Guide 108.

One of the responsibilities of a technical committee is, wherever applicable, to make use of horizontal standards in the preparation of its publications. The contents of this horizontal standard will not apply unless specifically referred to or included in the relevant publications.

2 Normative references

The following documents are referred to in the text in such a way that some or all of their content constitutes requirements of this document. For dated references, only the edition cited applies. For undated references, the latest edition of the referenced document (including any amendments) applies.

IEC 60947-7-2, *Low-voltage switchgear and controlgear – Part 7-2: Ancillary equipment – Protective conductor terminal blocks for copper conductors*

Documents
Document Sharing Hub

Full document details: IEC 60715 2017

3 Terms and definitions

For the purposes of this document, the following terms and definitions apply.

ISO and IEC maintain terminological databases for use in standardization at the following addresses:

- IEC Electropedia: available at http://www.electropedia.org/
- ISO Online browsing platform: available at http://www.iso.org/obp

3.1
mounting rail
standardized profile of any material used for supporting switchgear, controlgear and accessories

3.2
reference plane (for measurement)
plane touching the front of the rail

4 Functional requirements

The basic functional requirement of mounting rails is that they shall adequately support mechanically the electrical equipment.

The rail itself, in combination with the distance between the points of support and the nature of these supports, shall be of sufficient mechanical strength and stiffness to ensure the static and dynamic load of the equipment.

Because of the great variety of equipment, and of combinations of equipment, and the spatial distribution of such equipment, it is not possible to state specific requirements that ensure proper performance under all conditions; however the detailed dimensions and the strength requirements given in Annex A and Annex B have been shown by experience to be suitable for use with a variety of equipment e.g. contactors, fuses, switches, terminal blocks, accessories and circuit-breakers.

The responsibility for the correct construction and choice of materials lies with the manufacturer of the complete assembly. Rail mounting affects the performance of equipment, and it is advisable for product technical committees to give guidance in their publications on the suitability for mounting on rail.

5 Standard dimensions

5.1 General

Unless otherwise mentioned, dimensions are given in millimetres. Only dimensions and angles which are critical for the correct design of the rail are specified in Figures 1 to 8.

The indication "burr-free edge" may be made subject to agreement between manufacturer and user so as to ensure proper fitting in practical cases.

Documents
Document Sharing Hub
Full document details: IEC 60715 2017

5.2 Top hat section

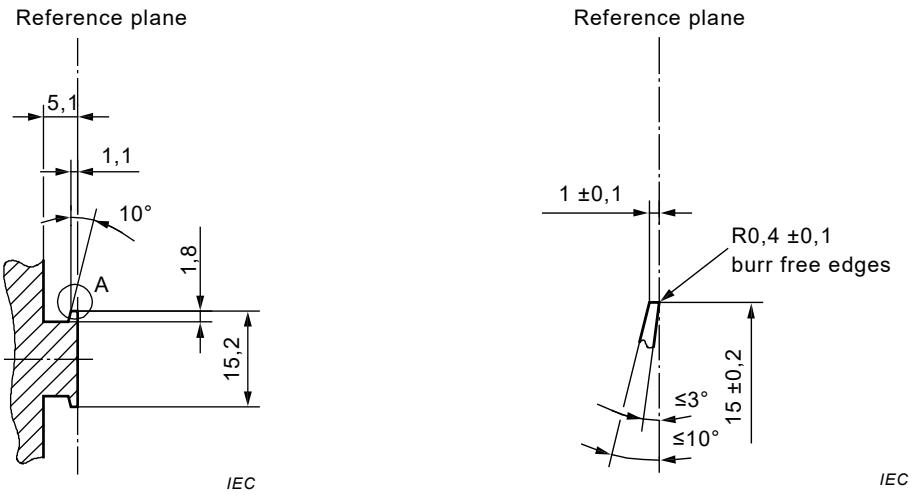

a) **Lateral view** b) **Detail A**

Figure 1 – Mounting rail TH 15

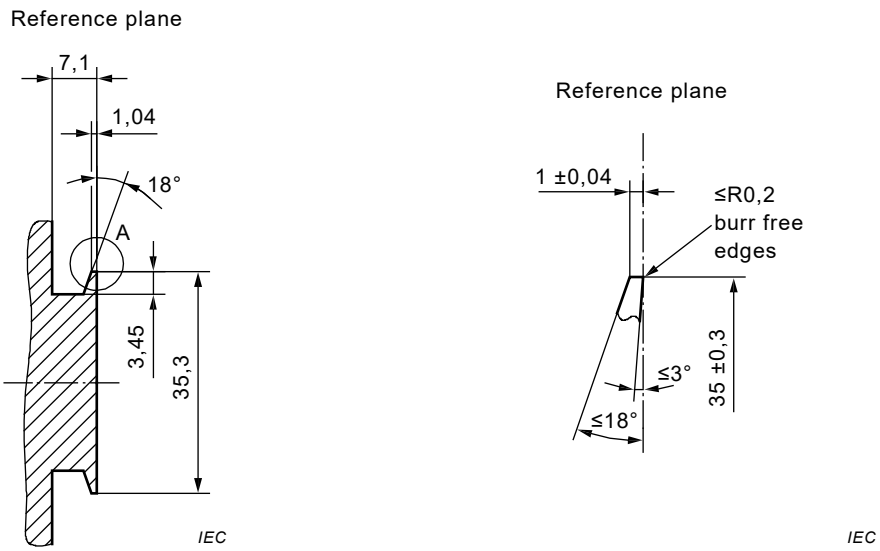

a) **Lateral view** b) **Detail A**

Figure 2 – Mounting rail TH 35

Documents
Document Sharing Hub
Full document details: IEC 60715 2017

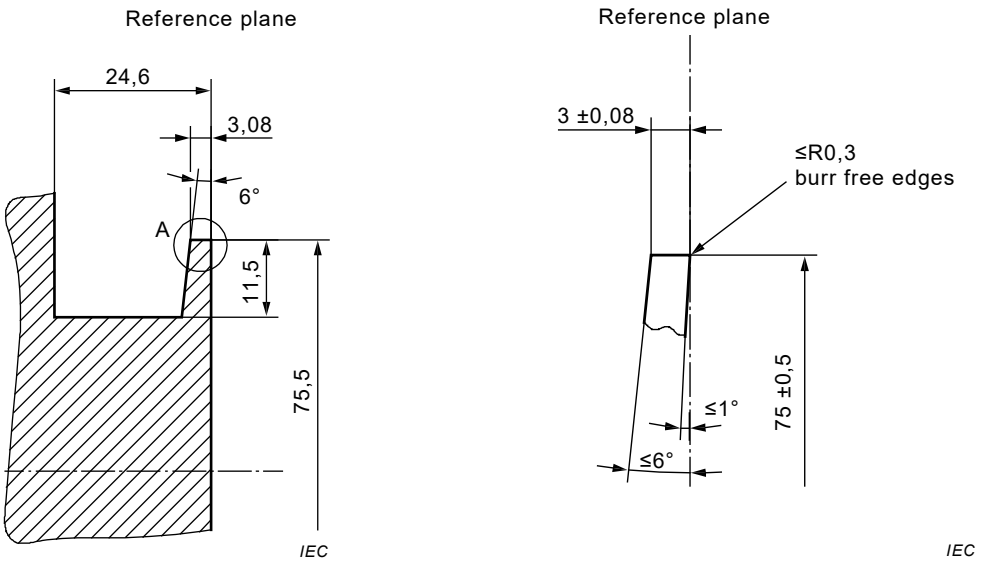

a) **Lateral view** b) **Detail A**

Figure 3 – Mounting rail TH 75

In Figures 1 a), 2 a) and 3 a), the cross-hatched area shows the maximum space available for the rail, its supporting structure and fixing means. The remaining space is the maximum space which can be counted on as available for the equipment to be mounted on the rail.

Figures 1 b), 2 b) and 3 b) show magnified details of the edge of the rail, including the manufacturing tolerances. The rails are symmetrical within the given tolerances. The angular tolerances indicated are one-sided and shall remain between zero and the values indicated. They include design tolerances.

5.3 "C" section

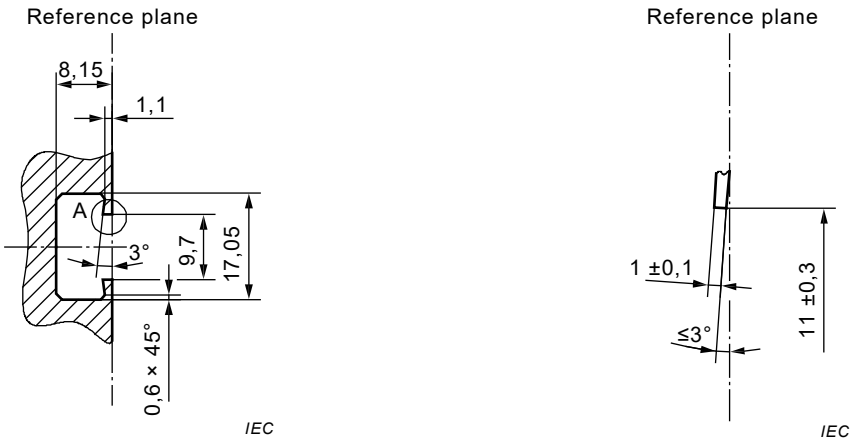

a) **Lateral view** b) **Detail A**

Figure 4 – Mounting rail C 20

Documents
Document Sharing Hub
Full document details: IEC 60715 2017

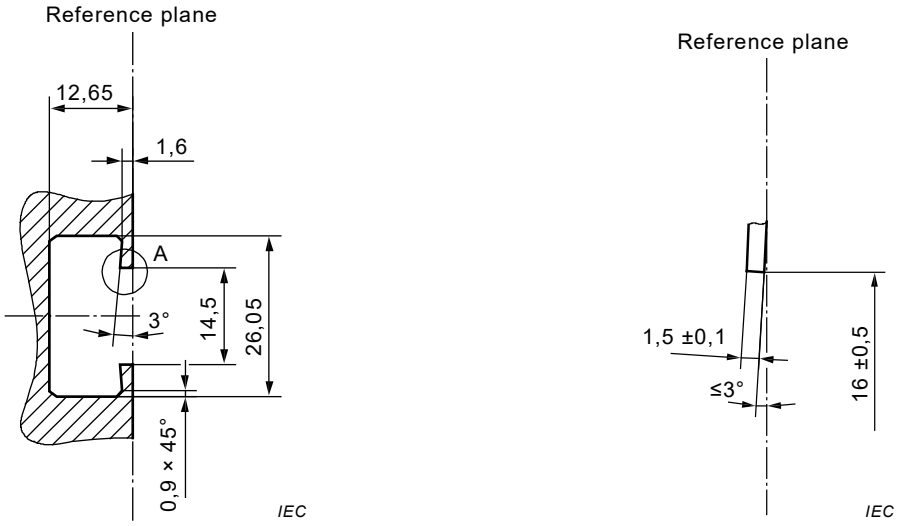

a) **Lateral view** b) **Detail A**

Figure 5 – Mounting rail C 30

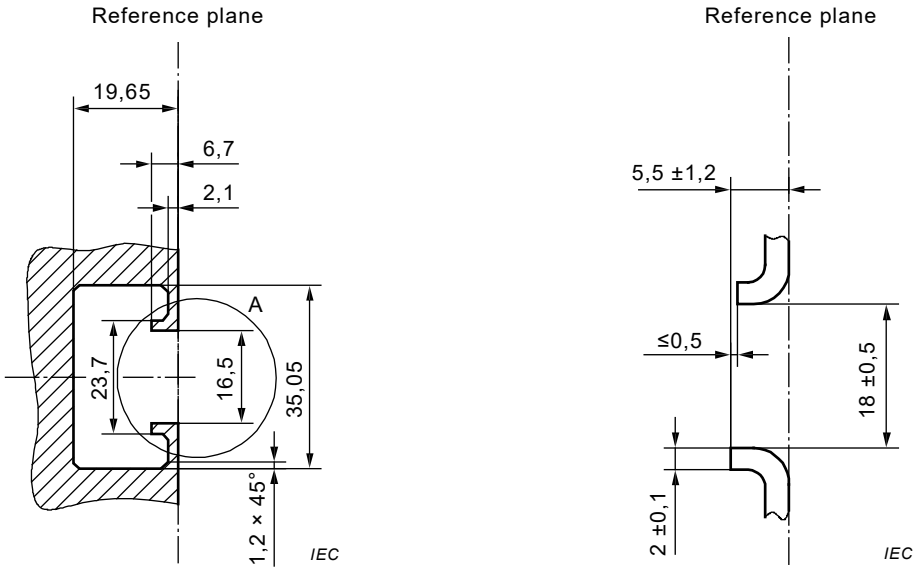

a) **Lateral view** b) **Detail A**

Figure 6 – Mounting rail C 40

Documents
Document Sharing Hub
Full document details: IEC 60715 2017

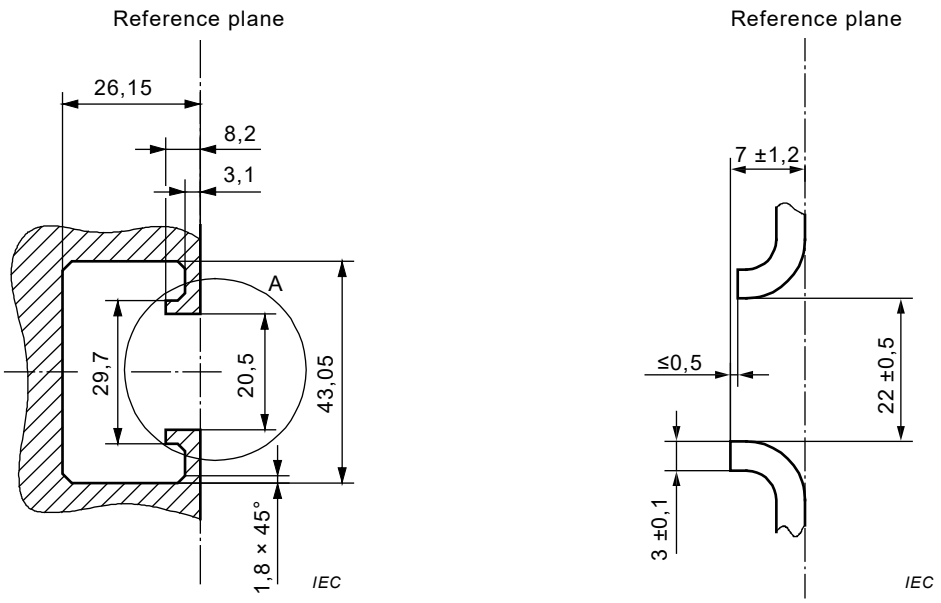

a) Lateral view **b) Detail A**

Figure 7 – Mounting rail C 50

In Figures 4 a), 5 a), 6 a) and 7 a), the cross-hatched area shows the maximum space available for the rail and its supporting structure; it does not take into account the fixing means for the rail. The remaining space is the maximum space which can be counted on as available for the equipment to be mounted on the rail.

Figures 4 b), 5 b), 6 b) and 7 b) show magnified details of the edge of the rail, including the manufacturing tolerances. The rails are symmetrical within the given tolerances. The angular tolerances indicated are one-sided and shall remain between zero and the values indicated. They include design tolerances.

Documents
Document Sharing Hub
Full document details: IEC 60715 2017

5.4 "G" section

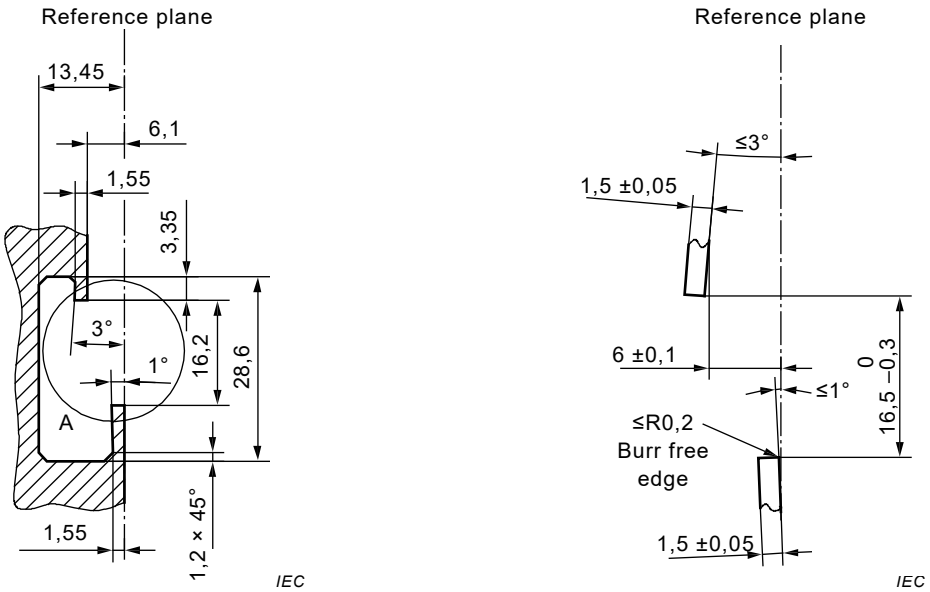

a) Lateral view

b) Detail A

Figure 8 – Mounting rail G 32

In Figure 8 a), the cross-hatched area shows the maximum space available for the rail and its supporting structure; it does not take into account the fixing means for the rail. The remaining space is the maximum space which can be counted on as available for the equipment to be mounted on the rail.

Figure 8 b) shows magnified details of the edge of the rail, including the manufacturing tolerances. The angular tolerances indicated are one-sided and shall remain between zero and the values indicated. They include design tolerances.

Documents
Document Sharing Hub
Full document details: IEC 60715 2017

Annex A
(normative)

Specific steel mounting rails

A.1 General

This annex gives specifications for the selection of steel and finish, and specifies the standards dimension and manufacturing tolerances of specific steel mounting rails which meet the requirements of this document.

A suitable material is a cold-rolled carbon steel sheet having the following characteristics:

– skin passed after annealing;
– bright surface finish;
– tensile strength between 320 N/mm^2 and 420 N/mm^2;
– elongation at least 30 %;
– 180° bend test horizontally and transversally with regard to the direction of rolling.

A suitable finish is zinc-plating and chromating, with a layer having a thickness of at least 6 µm, except for the cut surfaces resulting from cutting to length.

Other qualities of steel and other finishes may be used by agreement between the manufacturer and the user.

Unless otherwise stated, dimensions are expressed in millimetres.

The indication "burr free edge" may be made subject to agreement between manufacturer and user so as to ensure proper fitting in practical cases.

NOTE All symbols in figures are in accordance with ISO 1101.

A.2 Top hat section rail TH 15-5,5

A.2.1 Dimensions

The dimensions stated for such rails are indicated in Figure A.1.

These dimensions apply over the whole length of the top hat but shall not be verified at less than 10 mm from each end.

Documents
Document Sharing Hub
Full document details: IEC 60715 2017

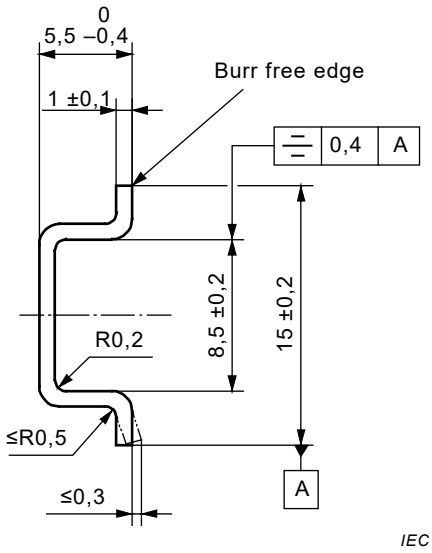

Figure A.1 – Top hat rails 15 mm wide for snap-on mounting of equipment

A.2.2 Tolerances

Mounting rails that are provided as separate components shall respect the additional tolerances shown in Figure A.2.

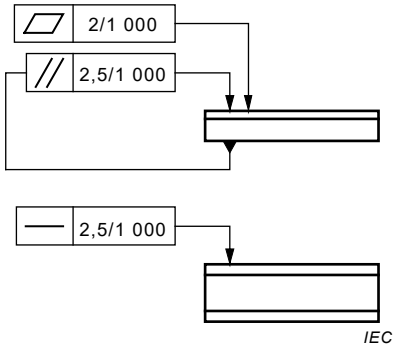

Figure A.2 – Tolerances (TH 15-5,5)

A.3 Top hat section rail TH 35-7,5 and TH 35-15

A.3.1 Dimensions

Dimensions stated for such rails are indicated in Figure A.3.

These dimensions apply over the whole length of the top hat rail but shall not be verified at less than 10 mm from the ends.

Documents
Document Sharing Hub
Full document details: IEC 60715 2017

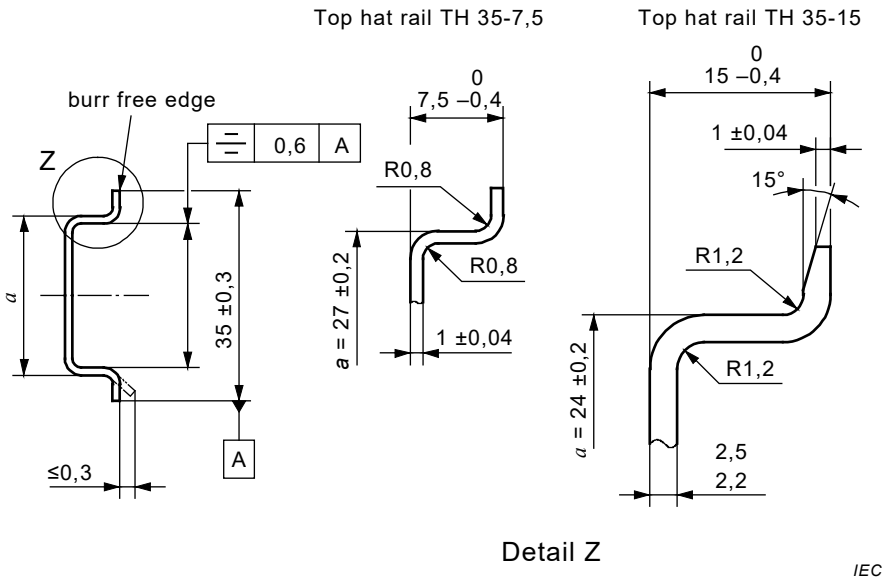

Figure A.3 – Top hat rails 35 mm wide for snap-on mounting of equipment

A.3.2 Tolerances

Mounting rails that are provided as separate components shall respect the additional tolerances shown in Figure A.4.

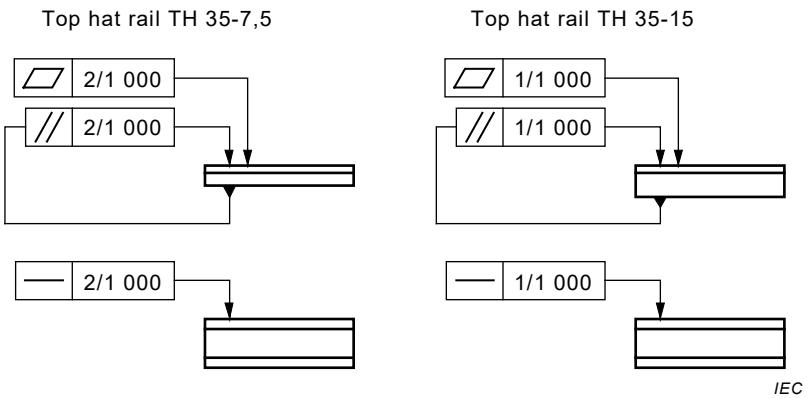

Figure A.4 – Tolerances (TH 35-7,5 and TH 35-15)

A.4 Top hat section rail TH 75-25

A.4.1 Dimensions

Dimensions for such rails are indicated in Figure A.5.

These dimensions apply over the whole length of the top hat rail but shall not be verified at less than 25 mm from the ends.

Documents
Document Sharing Hub
Full document details: IEC 60715 2017