IEC 60747-16-6

Edition 1.0 2019-06

INTERNATIONAL STANDARD

NORME INTERNATIONALE

Semiconductor devices –
Part 16-6: Microwave integrated circuits – Frequency multipliers

Dispositifs à semiconducteurs –
Partie 16-6: Circuits intégrés hyperfréquences – Multiplicateurs de fréquence

IEC 60747-16-6:2019-06(en-fr)

Documents
Document Sharing Hub

Full document details: IEC 60747-16-6-2019

THIS PUBLICATION IS COPYRIGHT PROTECTED
Copyright © 2019 IEC, Geneva, Switzerland

All rights reserved. Unless otherwise specified, no part of this publication may be reproduced or utilized in any form or by any means, electronic or mechanical, including photocopying and microfilm, without permission in writing from either IEC or IEC's member National Committee in the country of the requester. If you have any questions about IEC copyright or have an enquiry about obtaining additional rights to this publication, please contact the address below or your local IEC member National Committee for further information.

Droits de reproduction réservés. Sauf indication contraire, aucune partie de cette publication ne peut être reproduite ni utilisée sous quelque forme que ce soit et par aucun procédé, électronique ou mécanique, y compris la photocopie et les microfilms, sans l'accord écrit de l'IEC ou du Comité national de l'IEC du pays du demandeur. Si vous avez des questions sur le copyright de l'IEC ou si vous désirez obtenir des droits supplémentaires sur cette publication, utilisez les coordonnées ci-après ou contactez le Comité national de l'IEC de votre pays de résidence.

IEC Central Office
3, rue de Varembé
CH-1211 Geneva 20
Switzerland

Tel.: +41 22 919 02 11
info@iec.ch
www.iec.ch

About the IEC
The International Electrotechnical Commission (IEC) is the leading global organization that prepares and publishes International Standards for all electrical, electronic and related technologies.

About IEC publications
The technical content of IEC publications is kept under constant review by the IEC. Please make sure that you have the latest edition, a corrigendum or an amendment might have been published.

IEC publications search - webstore.iec.ch/advsearchform
The advanced search enables to find IEC publications by a variety of criteria (reference number, text, technical committee,…). It also gives information on projects, replaced and withdrawn publications.

IEC Just Published - webstore.iec.ch/justpublished
Stay up to date on all new IEC publications. Just Published details all new publications released. Available online and once a month by email.

IEC Customer Service Centre - webstore.iec.ch/csc
If you wish to give us your feedback on this publication or need further assistance, please contact the Customer Service Centre: sales@iec.ch.

Electropedia - www.electropedia.org
The world's leading online dictionary on electrotechnology, containing more than 22 000 terminological entries in English and French, with equivalent terms in 16 additional languages. Also known as the International Electrotechnical Vocabulary (IEV) online.

IEC Glossary - std.iec.ch/glossary
67 000 electrotechnical terminology entries in English and French extracted from the Terms and Definitions clause of IEC publications issued since 2002. Some entries have been collected from earlier publications of IEC TC 37, 77, 86 and CISPR.

A propos de l'IEC
La Commission Electrotechnique Internationale (IEC) est la première organisation mondiale qui élabore et publie des Normes internationales pour tout ce qui a trait à l'électricité, à l'électronique et aux technologies apparentées.

A propos des publications IEC
Le contenu technique des publications IEC est constamment revu. Veuillez vous assurer que vous possédez l'édition la plus récente, un corrigendum ou amendement peut avoir été publié.

Recherche de publications IEC - webstore.iec.ch/advsearchform
La recherche avancée permet de trouver des publications IEC en utilisant différents critères (numéro de référence, texte, comité d'études,…). Elle donne aussi des informations sur les projets et les publications remplacées ou retirées.

IEC Just Published - webstore.iec.ch/justpublished
Restez informé sur les nouvelles publications IEC. Just Published détaille les nouvelles publications parues. Disponible en ligne et une fois par mois par email.

Service Clients - webstore.iec.ch/csc
Si vous désirez nous donner des commentaires sur cette publication ou si vous avez des questions contactez-nous: sales@iec.ch.

Electropedia - www.electropedia.org
Le premier dictionnaire d'électrotechnologie en ligne au monde, avec plus de 22 000 articles terminologiques en anglais et en français, ainsi que les termes équivalents dans 16 langues additionnelles. Egalement appelé Vocabulaire Electrotechnique International (IEV) en ligne.

Glossaire IEC - std.iec.ch/glossary
67 000 entrées terminologiques électrotechniques, en anglais et en français, extraites des articles Termes et Définitions des publications IEC parues depuis 2002. Plus certaines entrées antérieures extraites des publications des CE 37, 77, 86 et CISPR de l'IEC.

Documents
Document Sharing Hub

Full document details: IEC 60747-16-6-2019

IEC 60747-16-6

Edition 1.0 2019-06

INTERNATIONAL STANDARD

NORME INTERNATIONALE

Semiconductor devices –
Part 16-6: Microwave integrated circuits – Frequency multipliers

Dispositifs à semiconducteurs –
Partie 16-6: Circuits intégrés hyperfréquences – Multiplicateurs de fréquence

INTERNATIONAL
ELECTROTECHNICAL
COMMISSION

COMMISSION
ELECTROTECHNIQUE
INTERNATIONALE

ICS 31.080.99

ISBN 978-2-8322-7081-3

Warning! Make sure that you obtained this publication from an authorized distributor.
Attention! Veuillez vous assurer que vous avez obtenu cette publication via un distributeur agréé.

® Registered trademark of the International Electrotechnical Commission
Marque déposée de la Commission Electrotechnique Internationale

Documents
Document Sharing Hub

Full document details: IEC 60747-16-6-2019

CONTENTS

FOREWORD 4
1 Scope 6
2 Normative references 6
3 Terms and definitions 6
4 Essential ratings and characteristics 8
4.1 General requirements 8
4.1.1 Circuit identification and types 8
4.1.2 General function description 8
4.1.3 Manufacturing technology 8
4.1.4 Package identification 8
4.2 Application description 8
4.2.1 Conformance to system and/or interface information 8
4.2.2 Overall block diagram 8
4.2.3 Reference data 8
4.2.4 Electrical compatibility 8
4.2.5 Associated devices 9
4.3 Specification of the function 9
4.3.1 Detailed block diagram – Functional blocks 9
4.3.2 Identification and function of terminals 9
4.3.3 Function description 10
4.4 Limiting values (absolute maximum rating system) 10
4.4.1 Requirements 10
4.4.2 Electrical limiting values 10
4.4.3 Temperatures 11
4.5 Operating conditions (within the specified operating temperature range) 11
4.6 Electrical characteristics 12
4.7 Mechanical and environmental ratings, characteristics and data 12
4.8 Additional information 12
5 Measuring methods 13
5.1 General 13
5.1.1 General precautions 13
5.1.2 Characteristic impedance 13
5.1.3 Handling precautions 13
5.1.4 Types 13
5.2 Output power (P_O) 13
5.2.1 Purpose 13
5.2.2 Circuit diagram 13
5.2.3 Principle of measurement 13
5.2.4 Circuit description and requirements 14
5.2.5 Precautions to be observed 14
5.2.6 Measurement procedure 14
5.2.7 Specified conditions 14
5.3 Conversion gain (G_C) 14
5.3.1 Purpose 14
5.3.2 Circuit diagram 15
5.3.3 Principle of measurement 15
5.3.4 Circuit description and requirements 15

AVA Documents
Document Sharing Hub
Full document details: IEC 60747-16-6-2019

5.3.5 Precautions to be observed 15
5.3.6 Measurement procedure 15
5.3.7 Specified conditions 15
5.4 Input return loss ($L_{ret(in)}$) 15
5.4.1 Purpose 15
5.4.2 Circuit diagram 15
5.4.3 Principle of measurement 16
5.4.4 Circuit description and requirements 16
5.4.5 Precautions to be observed 16
5.4.6 Measurement procedure 16
5.4.7 Specified conditions 17
5.5 Output return loss ($L_{ret(out)}$) 17
5.5.1 Purpose 17
5.5.2 Circuit diagram 17
5.5.3 Principle of measurement 17
5.5.4 Circuit description and requirements 18
5.5.5 Precautions to be observed 18
5.5.6 Measurement procedure 18
5.5.7 Specified conditions 18
5.6 Fundamental isolation (P_o/P_1) 19
5.6.1 Purpose 19
5.6.2 Circuit diagram 19
5.6.3 Principle of measurement 19
5.6.4 Circuit description and requirements 19
5.6.5 Precautions to be observed 19
5.6.6 Measurement procedure 19
5.6.7 Specified conditions 20
5.7 n-th order harmonic isolation (P_o/P_{nth}) 20
5.7.1 Purpose 20
5.7.2 Circuit diagram 20
5.7.3 Principle of measurement 20
5.7.4 Circuit description and requirements 20
5.7.5 Precautions to be observed 20
5.7.6 Measurement procedure 20
5.7.7 Specified conditions 21
5.8 Phase noise ($\mathscr{S}(f)$) 21
5.8.1 Purpose 21
5.8.2 Measuring methods 21

Figure 1 – Circuit diagram for the measurement of the output power 13
Figure 2 – Circuit diagram for the measurement of the input return loss 16
Figure 3 – Circuit diagram for the measurement of the output return loss 17
Figure 4 – Circuit diagram for the measurement of the phase noise $\mathscr{S}(f)$ (method 1) 22
Figure 5 – Circuit diagram for the measurement of the phase noise $\mathscr{S}(f)$ (method 2) 23
Figure 6 – Circuit diagram for the measurement of the phase noise $\mathscr{S}(f)$ (method 3) 24

Table 1 – Comparison of phase noise measuring methods 21

AVA Documents
Document Sharing Hub

Full document details: IEC 60747-16-6-2019

INTERNATIONAL ELECTROTECHNICAL COMMISSION

SEMICONDUCTOR DEVICES –

Part 16-6: Microwave integrated circuits – Frequency multipliers

FOREWORD

1) The International Electrotechnical Commission (IEC) is a worldwide organization for standardization comprising all national electrotechnical committees (IEC National Committees). The object of IEC is to promote international co-operation on all questions concerning standardization in the electrical and electronic fields. To this end and in addition to other activities, IEC publishes International Standards, Technical Specifications, Technical Reports, Publicly Available Specifications (PAS) and Guides (hereafter referred to as "IEC Publication(s)"). Their preparation is entrusted to technical committees; any IEC National Committee interested in the subject dealt with may participate in this preparatory work. International, governmental and non-governmental organizations liaising with the IEC also participate in this preparation. IEC collaborates closely with the International Organization for Standardization (ISO) in accordance with conditions determined by agreement between the two organizations.
2) The formal decisions or agreements of IEC on technical matters express, as nearly as possible, an international consensus of opinion on the relevant subjects since each technical committee has representation from all interested IEC National Committees.
3) IEC Publications have the form of recommendations for international use and are accepted by IEC National Committees in that sense. While all reasonable efforts are made to ensure that the technical content of IEC Publications is accurate, IEC cannot be held responsible for the way in which they are used or for any misinterpretation by any end user.
4) In order to promote international uniformity, IEC National Committees undertake to apply IEC Publications transparently to the maximum extent possible in their national and regional publications. Any divergence between any IEC Publication and the corresponding national or regional publication shall be clearly indicated in the latter.
5) IEC itself does not provide any attestation of conformity. Independent certification bodies provide conformity assessment services and, in some areas, access to IEC marks of conformity. IEC is not responsible for any services carried out by independent certification bodies.
6) All users should ensure that they have the latest edition of this publication.
7) No liability shall attach to IEC or its directors, employees, servants or agents including individual experts and members of its technical committees and IEC National Committees for any personal injury, property damage or other damage of any nature whatsoever, whether direct or indirect, or for costs (including legal fees) and expenses arising out of the publication, use of, or reliance upon, this IEC Publication or any other IEC Publications.
8) Attention is drawn to the Normative references cited in this publication. Use of the referenced publications is indispensable for the correct application of this publication.
9) Attention is drawn to the possibility that some of the elements of this IEC Publication may be the subject of patent rights. IEC shall not be held responsible for identifying any or all such patent rights.

International Standard IEC 60747-16-6 has been prepared by subcommittee 47E: Discrete semiconductor devices, of IEC technical committee 47: Semiconductor devices.

The text of this International Standard is based on the following documents:

CDV	Report on voting
47E/602/CDV	47E/622A/RVC

Full information on the voting for the approval of this International Standard can be found in the report on voting indicated in the above table.

The French version of this standard has not been voted upon.

This document has been drafted in accordance with the ISO/IEC Directives, Part 2.

Documents
Document Sharing Hub

Full document details: IEC 60747-16-6-2019

A list of all parts in the IEC 60747 series, published under the general title *Semiconductor devices,* can be found on the IEC website.

The committee has decided that the contents of this document will remain unchanged until the stability date indicated on the IEC website under "http://webstore.iec.ch" in the data related to the specific document. At this date, the document will be

- reconfirmed,
- withdrawn,
- replaced by a revised edition, or
- amended.

Documents
Document Sharing Hub

Full document details: IEC 60747-16-6-2019

SEMICONDUCTOR DEVICES –

Part 16-6: Microwave integrated circuits – Frequency multipliers

1 Scope

This part of IEC 60747 specifies the terminology, essential ratings and characteristics, and measuring methods of microwave integrated circuit frequency multipliers.

2 Normative references

The following documents are referred to in the text in such a way that some or all of their content constitutes requirements of this document. For dated references, only the edition cited applies. For undated references, the latest edition of the referenced document (including any amendments) applies.

IEC 60617, *Graphical symbols for diagrams* (available at http://std.iec.ch/iec60617>)

IEC 60747-1:2006, *Semiconductor devices – Part 1: General*
IEC 60747-1:2006/AMD 1:2010

IEC 60747-4, *Semiconductor devices – Discrete devices – Part 4: Microwave diodes and transistors*

IEC 60747-16-3:2002, *Semiconductor devices – Part 16-3: Microwave integrated circuits – Frequency converters*
IEC 60747-16-3:2002/AMD 1:2009
IEC 60747-16-3:2002/AMD 2:2017

IEC 61340-5-1, *Electrostatics – Part 5-1: Protection of electronic devices from electrostatic phenomena – General requirements*

IEC TR 61340-5-2, *Electrostatics – Part 5-2: Protection of electronic devices from electrostatic phenomena – User guide*

3 Terms and definitions

For the purposes of this document, the following terms and definitions apply.

ISO and IEC maintain terminological databases for use in standardization at the following addresses:

- IEC Electropedia: available at http://www.electropedia.org/
- ISO Online browsing platform: available at http://www.iso.org/obp

3.1
output frequency
f_o
frequency which equals the input frequency multiplied by the multiplying factor N, where N is an integer

Documents
Document Sharing Hub

Full document details: IEC 60747-16-6-2019

3.2
output power
P_o
RF power measured at the output port at the output frequency

3.3
conversion gain
G_c
ratio of the output power to the input power

3.4
input return loss
$L_{ret(in)}$
ratio of the incident power at the input port to the reflected power at the input port

3.5
output return loss
$L_{ret(out)}$
ratio of the incident power at the output port to the reflected power at the output port

3.6
fundamental isolation
P_o/P_1
ratio of the output power to the power of fundamental component at the input frequency at the output port

3.7
n-th order harmonic isolation
P_o/P_{nth}
ratio of the output power to the power of the n-th order harmonic component at the output port

3.8
phase noise
$\mathscr{S}(f)$
frequency-domain measure of the short-term frequency stability of an output

Note 1 to entry: This phase noise is normally expressed as the power spectral density of the phase fluctuations, $S_\phi(f)$, where the phase fluctuation function is $\phi(t) = 2\pi Ft - 2\pi F_0 t$. The spectral density of phase fluctuation can be directly related to the spectral density of frequency fluctuation by the following formula:

$$S_\phi(f) = \left(\frac{F_0}{f}\right) S_y(f) \qquad \text{rad}^2/\text{Hz}$$

where

F is the output frequency;

F_0 is the average output frequency;

f is the Fourier frequency.

Note 2 to entry: $\mathscr{S}(f)$ is pronounced "script-ell of f".

[SOURCE: IEC 60050-561:2014, 561-03-22, modified – A symbol and Note 2 to entry have been added. "Oscillator" has been replaced by "output."]

Documents
Document Sharing Hub
Full document details: IEC 60747-16-6-2019

4 Essential ratings and characteristics

4.1 General requirements

4.1.1 Circuit identification and types

The identification of type (device name), the category of circuit and technology applied shall be given.

Microwave frequency multipliers comprise one category.

4.1.2 General function description

A general description of the function performed by the integrated circuit microwave frequency multipliers and the features for the application shall be made.

4.1.3 Manufacturing technology

The manufacturing technology, for example semiconductor monolithic integrated circuit, thin film integrated circuit, micro-assembly. shall be stated. This statement shall include details of the semiconductor technologies such as Schottky-barrier diode, metal-semi-conductor-field-effect-transistor (MESFET), Si bipolar transistor.

IEC 60747-4 shall be referred to for terminology and letter symbols, essential ratings and characteristics and measuring methods of such microwave devices.

4.1.4 Package identification

The following statements shall be made:

a) chip or packaged form;

b) IEC and/or national reference number of the outline drawing, or drawing of non-standard package including terminal numbering;

c) principal package material, for example, metal, ceramic, plastic.

4.2 Application description

4.2.1 Conformance to system and/or interface information

It should be stated whether the integrated circuit conforms to an application system and/or an interface standard or a recommendation.

Detailed information concerning application systems, equipment and circuits such as very small aperture terminal (VSAT) systems, broadcasting satellite (BS) receivers, microwave landing systems should also be given.

4.2.2 Overall block diagram

A block diagram of the applied systems should be given if necessary.

4.2.3 Reference data

The most important properties that permit comparison between derivative types should be given.

4.2.4 Electrical compatibility

It should be stated whether the integrated circuit is electrically compatible with other particular integrated circuits, or families of integrated circuits, or whether special interfaces are required.

AVA Documents
Document Sharing Hub

Full document details: IEC 60747-16-6-2019

Details should be given concerning the type of input and output circuits, for example input/output impedances, DC block, open-drain. Interchangeability with other devices, if any, should also be given.

4.2.5 Associated devices

If applicable, the following should be stated:

– devices necessary for correct operation (list with type number, name and function);
– peripheral devices with direct interfacing (list with type number, name and function).

4.3 Specification of the function

4.3.1 Detailed block diagram – Functional blocks

A detail block diagram or equivalent circuit information of the integrated circuit microwave frequency multipliers shall be given. The block diagram shall be composed of the following:

a) functional blocks;
b) mutual interconnections among the functional blocks;
c) individual functional units within the functional blocks;
d) mutual interconnections among the individual functional blocks;
e) function of each external connection;
f) inter-dependence between the separate functional blocks.

The block diagram shall identify the function of each external connection and, where no ambiguity can arise, also show the terminal symbols and/or numbers. If the encapsulation has metallic parts, any connection to them from external terminals shall be indicated. The connections with any associated external electrical elements shall be stated, where necessary.

As additional information, the complete electrical circuit diagram can be reproduced, but not necessarily with indications of the values of the circuit components. The graphical symbol for the function shall be given. With respect to the rules governing such diagrams, IEC 60617 applies.

4.3.2 Identification and function of terminals

All terminals shall be identified on the block diagram (supply terminals, input or output terminals, input/output terminals).

The terminal functions 1) to 4) shall be indicated in a table as follows:

Terminal number	Terminal symbol	1) Terminal designation	2) Function	Function of terminal	
				3) Input/output identification	4) Type of input/output circuits

1) Terminal designation

   A terminal designation to indicate the function of the terminal shall be given. Supply terminals, ground terminals, blank terminals (with abbreviation NC), non-usable terminals (with abbreviation NU) shall be distinguished.

2) Function

   A brief indication of the terminal function shall be given:

   – each function of multi-role terminals, i.e. terminals having multiple functions;

Documents
Document Sharing Hub
Full document details: IEC 60747-16-6-2019

– each function of integrated circuit selected by mutual pin connections, programming and/or application of function selection data to the function selection pin, such as mode selection pin.

3) Input/output identification

Input, output, input/output and multiplex output terminals shall be distinguished.

4) Type of input/output circuits

The type of input and output circuit, for example input/output impedances, with or without DC block, shall be distinguished.

If the baseplate of the package is used as a ground terminal, the type of ground, for example analog ground, digital ground, shall be stated in the column of 2) Function.

EXAMPLE

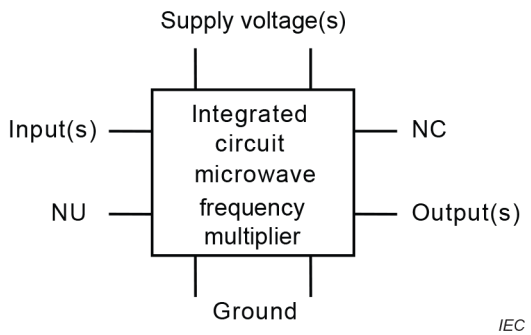

4.3.3 Function description

The function performed by the circuit shall be specified, including the following information:

– basic function;
– relation to external terminals;
– operation mode (e.g. set-up method, preference).

4.4 Limiting values (absolute maximum rating system)

4.4.1 Requirements

The table for these values shall contain the following:

– Any interdependence of limiting conditions shall be specified.
– If externally connected and/or attached elements, for example heatsinks, have an influence on the values of the ratings, the ratings shall be specified for the integrated circuit with the elements connected and/or attached.
– If limiting values are exceeded for transient overload, the permissible excess and their durations shall be specified.
– Where minimum and maximum values differ during programming of the device, this shall be stated.
– All voltages are referenced to a specified reference terminal (Vss, ground, etc.).
– If maximum and/or minimum values are quoted, the manufacturer shall indicate whether he refers to the absolute magnitude or to the algebraic value of the quantity.
– The ratings given shall cover the operation of the multi-function integrated circuit over the specified range of operating temperatures. Where such ratings are temperature-dependent, this dependence shall be indicated.

4.4.2 Electrical limiting values

Limiting values shall be specified as follows:

Documents
Document Sharing Hub
Full document details: IEC 60747-16-6-2019

Parameters	Min.	Max.
Bias voltage(s) (where appropriate)		+
Bias current(s) (where appropriate)		+
Terminal voltage(s) (where appropriate)	+	+
Terminal current(s) (where appropriate)		+
Input power		+
Power dissipation		+
It is necessary to select either bias voltage(s) or bias current(s), either terminal voltage(s) or terminal current(s).		

The detail specification may indicate those values within the table including footnotes a and b.

Parameters [a, b]	Symbols	Min.	Max.	Unit

[a] Where appropriate, in accordance with the type of circuit considered.

[b] For power supply voltage range:

- limiting value(s) of the continuous voltage(s) at the supply terminal(s) with respect to a special electrical reference point;
- where appropriate, limiting value between specified supply terminals;
- when more than one voltage supply is required, a statement shall be made as to whether the sequence in which these supplies are applied is significant: if so, the sequence shall be stated;
- when more than one supply is needed, it may be necessary to state the combinations of ratings for these supply voltages and currents.

4.4.3 Temperatures

The detail specification may indicate the following temperature values within the table including the note:

a) operating temperature (ambient or reference-point temperature);

b) storage temperature;

c) channel temperature;

d) lead temperature (for soldering).

Parameters (Note)	Symbols	Min.	Max.	Unit
NOTE Where appropriate, in accordance with the type of circuit considered.				

4.5 Operating conditions (within the specified operating temperature range)

Operating conditions are not to be inspected, but may be used for quality assessment purposes.

a) power supplies – positive and/or negative values;

b) initialization sequences (where appropriate);

If special initialization sequences are necessary, power supply sequencing and initialization procedure shall be specified.

c) input voltage(s) (where appropriate);

d) output current(s) (where appropriate);

Documents
Document Sharing Hub

Full document details: IEC 60747-16-6-2019

e) voltage and/or current of other terminal(s);

f) external elements (where appropriate);

g) operating temperature range.

4.6 Electrical characteristics

The characteristics shall apply over the full operating temperature range, unless otherwise specified. Each characteristic shall be stated either

a) over the specified range of operating temperatures, or

b) at a temperature of 25 °C, and at maximum and minimum operating temperatures.

Parameters	Min.	Typ.	Max.
Bias operating current		+	+
Conversion gain (G_c)	+	+	+
Output power (P_o)	+	+	+
Input return loss ($L_{ret(in)}$)	+	+	
Output return loss ($L_{ret(out)}$)	+	+	
Fundamental isolation (P_o/P_1)	+	+	
n-th order harmonic isolation (P_o/P_{nth})	+	+	
Phase noise ($\mathscr{L}(f)$)		+	+

4.7 Mechanical and environmental ratings, characteristics and data

Any specific mechanical and environmental ratings applicable shall be stated (see also 5.10 and 5.11 of IEC 60747-1:2006).

4.8 Additional information

Where appropriate, the following information shall be given:

a) Equivalent input and output circuit: Detail information shall be given regarding the type of input and output circuits, for example input/output impedances, DC block, open-drain.

b) Internal protection: A statement shall be given to indicate whether the integrated circuit contains internal protection against high static voltages or electrical fields.

c) Capacitors at terminals: If capacitors for the input/output DC block are needed, these capacitances shall be stated.

d) Thermal resistance.

e) Interconnections to other types of circuit: Where appropriate, details of the interconnections to other circuits shall be given.

f) Effects of externally connected component(s): Curves or data indicating the effect of externally connected component(s) that influence the characteristics may be given.

g) Recommendations for any associated device(s): For example, decoupling of power supply to a high-frequency device shall be stated.

h) Handling precautions: Where appropriate, handling precautions specific to the circuit shall be stated (see also IEC 61340-5-1 and IEC TR 61340-5-2).

i) Application data.

j) Other application information.

k) Date of issue of the data sheet.

Documents
Document Sharing Hub
Full document details: IEC 60747-16-6-2019

5 Measuring methods

5.1 General

5.1.1 General precautions

The general precautions listed in 6.3, 6.4 and 6.6 of IEC 60747-1:2006 shall be applied. In addition, special care shall be taken to use low-ripple DC power supplies and to decouple adequately all supply terminals at the frequency of measurement. Although the level of the signal can be specified in either power or voltage, in this document it is expressed in power unless otherwise specified.

5.1.2 Characteristic impedance

The characteristic impedance of the measurement system, shown in the circuit in this document, is 50 Ω. If it is not 50 Ω, it shall be specified.

5.1.3 Handling precautions

When handling electrostatic-sensitive devices, the handling precautions given in IEC 61340-5-1 and IEC TR 61340-5-2 shall be observed.

5.1.4 Types

The devices in this document are both packaged and chip types, measured using suitable test fixtures.

5.2 Output power (P_o)

5.2.1 Purpose

To measure the output power under specified conditions.

5.2.2 Circuit diagram

The measuring circuit is shown in Figure 1.

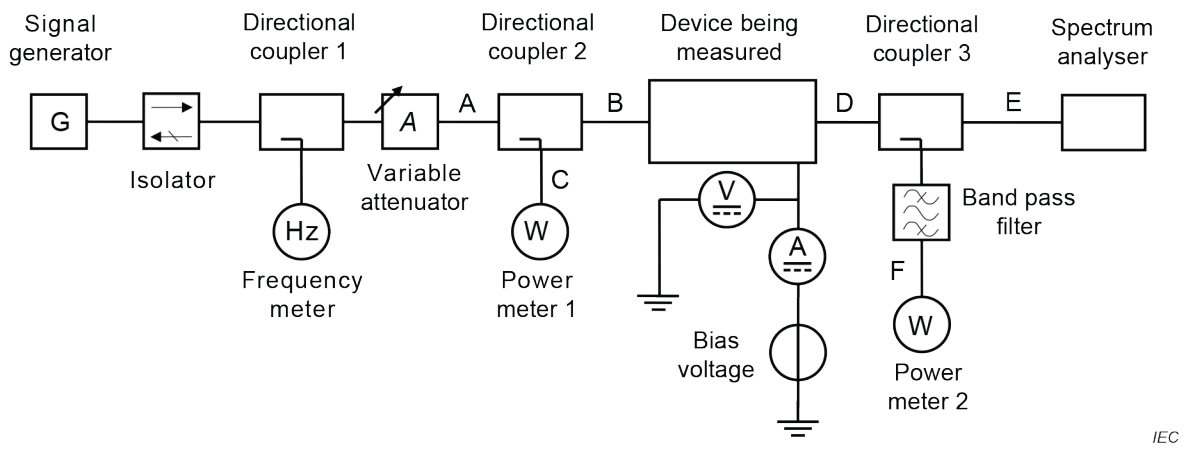

Figure 1 – Circuit diagram for the measurement of the output power

5.2.3 Principle of measurement

In the circuit diagram shown in Figure 1, the input power P_i and output power P_o of the device being measured are derived from the following equations:

Documents
Document Sharing Hub
Full document details: IEC 60747-16-6-2019

$$P_i = P_{m1} + L_1 \quad (1)$$

$$P_o = P_{m2} + L_2 \quad (2)$$

where

P_{m1} is the value indicated by the power meter 1;

P_{m2} is the value indicated by the power meter 2;

L_1 is the difference of the circuit losses, from point A to point B, and from point A to point C, at the input frequency f_i;

L_2 is the circuit loss from point D to point F at the output frequency f_o.

P_i, P_o, P_{m1} and P_{m2} are expressed in dBm. L_1 and L_2 are expressed in dB.

5.2.4 Circuit description and requirements

The circuit losses L_1 and L_2 shall be measured beforehand. The band pass filter is introduced before the power meter 2 in order to eliminate frequency components except at f_o. The purpose of the isolator is to enable the power level to the device being measured to be kept constant irrespective of impedance mismatched at its input.

5.2.5 Precautions to be observed

The output signal and oscillation shall be checked by a spectrum analyser. Oscillation shall be eliminated during these measurements. Harmonics or spurious responses of the signal generator should be reduced to negligible. An adequate attenuator should be inserted at the input of the spectrum analyser when the output power is high.

5.2.6 Measurement procedure

The frequency of the signal generator is set to the specified value.

The bias under specified conditions is applied.

The specified input power P_i is applied to the device being measured by monitoring the value P_{m1} measured by the power meter 1. P_i is derived from Equation (1).

The value P_{m2} is measured by the power meter 2, and then P_o is derived from Equation (2).

5.2.7 Specified conditions

The following conditions shall be specified.

– ambient or reference-point temperature;
– bias conditions;
– input frequency;
– input power;
– multiplying factor, N.

5.3 Conversion gain (G_c)

5.3.1 Purpose

To measure the conversion gain under specified conditions.

Documents
Document Sharing Hub
Full document details: IEC 60747-16-6-2019

5.3.2 Circuit diagram

See the circuit diagram shown in Figure 1.

5.3.3 Principle of measurement

See the principle of measurement in 5.2.3.

The conversion gain G_c is derived from the following equations:

$$G_c = P_o - P_i \tag{3}$$

where

P_i is the input power and P_o is the output power of the device being measured (see 5.2).
P_i and P_o are expressed in dBm. G_c is expressed in dB.

5.3.4 Circuit description and requirements

See the circuit description and requirements in 5.2.4.

5.3.5 Precautions to be observed

See the precautions to be observed of 5.2.5.

5.3.6 Measurement procedure

The frequency of the signal generator is set to the specified value.

The bias under specified conditions is applied.

The specified input power P_i is applied to the device being measured by monitoring the value P_{m1} measured by the power meter 1. P_i is derived from Equation (1).

The value P_{m2} is measured by the power meter 2, and then G_c is derived from Equations (1), (2) and (3).

5.3.7 Specified conditions

See the circuit description and requirements in 5.2.7.

5.4 Input return loss ($L_{ret(in)}$)

5.4.1 Purpose

To measure the input return loss under specified conditions.

5.4.2 Circuit diagram

The measuring circuit is shown in Figure 2.

Documents
Document Sharing Hub

Full document details: IEC 60747-16-6-2019