IEC 60747-5-7

Edition 1.0 2016-02

INTERNATIONAL STANDARD

NORME INTERNATIONALE

Semiconductor devices –
Part 5-7: Optoelectronic devices – Photodiodes and phototransistors

Dispositifs à semiconducteurs –
Partie 5-7: Dispositifs optoélectroniques – Photodiodes et phototransistors

IEC 60747-5-7:2016-02(en-fr)

Documents
Document Sharing Hub

Full document details: IEC 60747-5-7 2016

THIS PUBLICATION IS COPYRIGHT PROTECTED
Copyright © 2016 IEC, Geneva, Switzerland

All rights reserved. Unless otherwise specified, no part of this publication may be reproduced or utilized in any form or by any means, electronic or mechanical, including photocopying and microfilm, without permission in writing from either IEC or IEC's member National Committee in the country of the requester. If you have any questions about IEC copyright or have an enquiry about obtaining additional rights to this publication, please contact the address below or your local IEC member National Committee for further information.

Droits de reproduction réservés. Sauf indication contraire, aucune partie de cette publication ne peut être reproduite ni utilisée sous quelque forme que ce soit et par aucun procédé, électronique ou mécanique, y compris la photocopie et les microfilms, sans l'accord écrit de l'IEC ou du Comité national de l'IEC du pays du demandeur. Si vous avez des questions sur le copyright de l'IEC ou si vous désirez obtenir des droits supplémentaires sur cette publication, utilisez les coordonnées ci-après ou contactez le Comité national de l'IEC de votre pays de résidence.

IEC Central Office
3, rue de Varembé
CH-1211 Geneva 20
Switzerland

Tel.: +41 22 919 02 11
Fax: +41 22 919 03 00
info@iec.ch
www.iec.ch

About the IEC
The International Electrotechnical Commission (IEC) is the leading global organization that prepares and publishes International Standards for all electrical, electronic and related technologies.

About IEC publications
The technical content of IEC publications is kept under constant review by the IEC. Please make sure that you have the latest edition, a corrigenda or an amendment might have been published.

IEC Catalogue - webstore.iec.ch/catalogue
The stand-alone application for consulting the entire bibliographical information on IEC International Standards, Technical Specifications, Technical Reports and other documents. Available for PC, Mac OS, Android Tablets and iPad.

IEC publications search - www.iec.ch/searchpub
The advanced search enables to find IEC publications by a variety of criteria (reference number, text, technical committee,…). It also gives information on projects, replaced and withdrawn publications.

IEC Just Published - webstore.iec.ch/justpublished
Stay up to date on all new IEC publications. Just Published details all new publications released. Available online and also once a month by email.

Electropedia - www.electropedia.org
The world's leading online dictionary of electronic and electrical terms containing 20 000 terms and definitions in English and French, with equivalent terms in 15 additional languages. Also known as the International Electrotechnical Vocabulary (IEV) online.

IEC Glossary - std.iec.ch/glossary
65 000 electrotechnical terminology entries in English and French extracted from the Terms and Definitions clause of IEC publications issued since 2002. Some entries have been collected from earlier publications of IEC TC 37, 77, 86 and CISPR.

IEC Customer Service Centre - webstore.iec.ch/csc
If you wish to give us your feedback on this publication or need further assistance, please contact the Customer Service Centre: csc@iec.ch.

A propos de l'IEC
La Commission Electrotechnique Internationale (IEC) est la première organisation mondiale qui élabore et publie des Normes internationales pour tout ce qui a trait à l'électricité, à l'électronique et aux technologies apparentées.

A propos des publications IEC
Le contenu technique des publications IEC est constamment revu. Veuillez vous assurer que vous possédez l'édition la plus récente, un corrigendum ou amendement peut avoir été publié.

Catalogue IEC - webstore.iec.ch/catalogue
Application autonome pour consulter tous les renseignements bibliographiques sur les Normes internationales, Spécifications techniques, Rapports techniques et autres documents de l'IEC. Disponible pour PC, Mac OS, tablettes Android et iPad.

Recherche de publications IEC - www.iec.ch/searchpub
La recherche avancée permet de trouver des publications IEC en utilisant différents critères (numéro de référence, texte, comité d'études,…). Elle donne aussi des informations sur les projets et les publications remplacées ou retirées.

IEC Just Published - webstore.iec.ch/justpublished
Restez informé sur les nouvelles publications IEC. Just Published détaille les nouvelles publications parues. Disponible en ligne et aussi une fois par mois par email.

Electropedia - www.electropedia.org
Le premier dictionnaire en ligne de termes électroniques et électriques. Il contient 20 000 termes et définitions en anglais et en français, ainsi que les termes équivalents dans 15 langues additionnelles. Egalement appelé Vocabulaire Electrotechnique International (IEV) en ligne.

Glossaire IEC - std.iec.ch/glossary
65 000 entrées terminologiques électrotechniques, en anglais et en français, extraites des articles Termes et Définitions des publications IEC parues depuis 2002. Plus certaines entrées antérieures extraites des publications des CE 37, 77, 86 et CISPR de l'IEC.

Service Clients - webstore.iec.ch/csc
Si vous désirez nous donner des commentaires sur cette publication ou si vous avez des questions contactez-nous: csc@iec.ch.

Documents
Document Sharing Hub

Full document details: IEC 60747-5-7 2016

IEC 60747-5-7

Edition 1.0 2016-02

INTERNATIONAL STANDARD

NORME INTERNATIONALE

Semiconductor devices –
Part 5-7: Optoelectronic devices – Photodiodes and phototransistors

Dispositifs à semiconducteurs –
Partie 5-7: Dispositifs optoélectroniques – Photodiodes et phototransistors

INTERNATIONAL
ELECTROTECHNICAL
COMMISSION

COMMISSION
ELECTROTECHNIQUE
INTERNATIONALE

ICS 31.080.99

ISBN 978-2-8322-3189-0

Warning! Make sure that you obtained this publication from an authorized distributor.
Attention! Veuillez vous assurer que vous avez obtenu cette publication via un distributeur agréé.

® Registered trademark of the International Electrotechnical Commission
Marque déposée de la Commission Electrotechnique Internationale

Documents
Document Sharing Hub

Full document details: IEC 60747-5-7 2016

CONTENTS

FOREWORD....3
1 Scope....5
2 Normative references....5
3 Terms relating to physical concepts....5
4 Terms relating to types of devices....6
5 General terms....6
6 Terms relating to ratings and characteristics....9
6.1 Switching times....9
6.2 Photosensitive devices characteristics....11
7 Essential ratings and characteristics for photodiodes....14
8 Essential ratings and characteristics for phototransistors....15
9 Measuring methods for photosensitive devices....17
Annex A (informative) Cross-references index....22
Bibliography....23

Figure 1 – Optical port for devices with pigtail (emitter or detector)....7
Figure 2 – Optical port for packaged devices (emitter or detector), without pigtail....8
Figure 3 – Optical port for non-packaged devices (emitter or detector) without pigtail....9
Figure 4 – Switching times....11
Figure 5 – Fibre-input sensitivity s_{FD}....12
Figure 6 – Sensitivity diagram and related characteristics....14
Figure 7 – Block diagram for the measurement of the current under optical radiation....17
Figure 8 – Phototransistor and photodiode circuit diagrams....18
Figure 9 – Circuit diagrams....19
Figure 10 –Circuit diagram....20

Table 1 – Optical and electrical characteristics of photodiodes....15
Table 2 – Optical and electrical characteristics of phototransistors....16
Table A.1 – Cross references index....22

Documents
Document Sharing Hub
Full document details: IEC 60747-5-7 2016

INTERNATIONAL ELECTROTECHNICAL COMMISSION

SEMICONDUCTOR DEVICES –

Part 5-7: Optoelectronic devices – Photodiodes and phototransistors

FOREWORD

1) The International Electrotechnical Commission (IEC) is a worldwide organization for standardization comprising all national electrotechnical committees (IEC National Committees). The object of IEC is to promote international co-operation on all questions concerning standardization in the electrical and electronic fields. To this end and in addition to other activities, IEC publishes International Standards, Technical Specifications, Technical Reports, Publicly Available Specifications (PAS) and Guides (hereafter referred to as "IEC Publication(s)"). Their preparation is entrusted to technical committees; any IEC National Committee interested in the subject dealt with may participate in this preparatory work. International, governmental and non-governmental organizations liaising with the IEC also participate in this preparation. IEC collaborates closely with the International Organization for Standardization (ISO) in accordance with conditions determined by agreement between the two organizations.
2) The formal decisions or agreements of IEC on technical matters express, as nearly as possible, an international consensus of opinion on the relevant subjects since each technical committee has representation from all interested IEC National Committees.
3) IEC Publications have the form of recommendations for international use and are accepted by IEC National Committees in that sense. While all reasonable efforts are made to ensure that the technical content of IEC Publications is accurate, IEC cannot be held responsible for the way in which they are used or for any misinterpretation by any end user.
4) In order to promote international uniformity, IEC National Committees undertake to apply IEC Publications transparently to the maximum extent possible in their national and regional publications. Any divergence between any IEC Publication and the corresponding national or regional publication shall be clearly indicated in the latter.
5) IEC itself does not provide any attestation of conformity. Independent certification bodies provide conformity assessment services and, in some areas, access to IEC marks of conformity. IEC is not responsible for any services carried out by independent certification bodies.
6) All users should ensure that they have the latest edition of this publication.
7) No liability shall attach to IEC or its directors, employees, servants or agents including individual experts and members of its technical committees and IEC National Committees for any personal injury, property damage or other damage of any nature whatsoever, whether direct or indirect, or for costs (including legal fees) and expenses arising out of the publication, use of, or reliance upon, this IEC Publication or any other IEC Publications.
8) Attention is drawn to the Normative references cited in this publication. Use of the referenced publications is indispensable for the correct application of this publication.
9) Attention is drawn to the possibility that some of the elements of this IEC Publication may be the subject of patent rights. IEC shall not be held responsible for identifying any or all such patent rights.

International Standard IEC 60747-5-7 has been prepared by subcommittee 47E: Discrete semiconductor devices, of IEC technical committee 47: Semiconductor devices.

This standard replaces the clauses for photodiodes and phototransistors described in IEC 60747-5-1, IEC 60747-5-2 and IEC 60747-5-3 including their amendments.

IEC 60747-5-1, IEC 60747-5-2 and IEC 60747-5-3, including their amendments, are replaced by the publications of IEC 60747-5-4, IEC 60747-5-5, IEC 60747-5-6[1] and IEC 60747-5-7 as a result of reconstruction.

[1] To be published.

Documents
Document Sharing Hub
Full document details: IEC 60747-5-7 2016

The text of this standard is based on the following documents:

CDV	Report on voting
47E/471/CDV	47E/502/RVC

Full information on the voting for the approval of this standard can be found in the report on voting indicated in the above table.

This publication has been drafted in accordance with the ISO/IEC Directives, Part 2.

A list of all parts in the IEC 60747 series, published under the general title *Semiconductor devices*, can be found on the IEC website.

Future standards in this series will carry the new general title as cited above. Titles of existing standards in this series will be updated at the time of the next edition.

Documents
Document Sharing Hub

Full document details: IEC 60747-5-7 2016

SEMICONDUCTOR DEVICES –

Part 5-7: Optoelectronic devices – Photodiodes and phototransistors

1 Scope

This part of IEC 60747 specifies the terminology, the essential ratings and characteristics as well as the measuring methods of photodiodes (hereinafter referred to as “PDs”) and phototransistors (hereinafter referred to as “PTs”).

2 Normative references

The following documents, in whole or in part, are normatively referenced in this document and are indispensable for its application. For dated references, only the edition cited applies. For undated references, the latest edition of the referenced document (including any amendments) applies.

None.

3 Terms relating to physical concepts

3.1
electromagnetic radiation
radiation
1) emission or transfer of energy in the form of electromagnetic waves with the associated photons
2) these electromagnetic waves or these photons

[SOURCE: IEC 60050-845:1987, 845-01-01, modified – The note has been deleted.]

3.2
optical radiation
electromagnetic radiation of wavelengths between the region of transition to X-rays ($\lambda \approx 1$ nm) and the region of transition to radio waves ($\lambda \approx 1$ nm)

[SOURCE: IEC 60050- 845:1987, 845-01-02]

3.3
visible radiation
any optical radiation capable of causing a visual sensation directly

Note 1 to entry: There are no precise limits for the spectral range of visible radiation since they depend upon the amount of radiant power reaching retina and the responsivity of the observer. The lower limit is generally taken between 360 nm and 400 nm and the upper limit between 760 nm and 830 nm.

[SOURCE: IEC 60050-845:1987, 845-01-03]

3.4
infrared radiation
optical radiation for which the wavelengths are longer than those for visible radiation

[SOURCE: IEC 60050-845:1987, 845-01-04, modified – The note has been deleted.]

AVA Documents
Document Sharing Hub
Full document details: IEC 60747-5-7 2016

3.5
ultraviolet radiation
optical radiation for which the wavelengths are shorter than those for visible radiation

[SOURCE: IEC 60050-845:1987, 845-01-05, modified – The note has been deleted.]

3.6
light
1) perceived light
2) visible radiation

Note 1 to entry: The word light is sometimes used in sense 2 for optical radiation extending outside the visible range, but this usage is not recommended.

[SOURCE: IEC 60050-845:1987, 845-01-06, modified – Note 2 has been deleted because it was not relevant.]

3.7
photoelectric effect
interaction between optical radiation and matter resulting in the absorption of photons and the consequent generation of mobile charge carriers, thereby generating an electric potential or current, or a change in electrical resistance, excluding electrical phenomena caused by temperature changes

4 Terms relating to types of devices

4.1
semiconductor photosensitive device
semiconductor device that utilizes the photoelectric effect for detection of optical radiation

4.2
semiconductor optoelectronic device
1) semiconductor device that emits or detects or that is responsive to coherent or non-coherent optical radiation
2) semiconductor device that utilizes such radiation for its internal purposes

4.3
photodiode
photoelectric detector in which a photocurrent is generated by absorption of optical radiation in the neighbourhood of a p-n junction between two semiconductors, or a junction between a semiconductor and a metal

[SOURCE: IEC 60050-845:1987,845-05-39]

4.4
phototransistor
transistor in which the current produced by the photoelectric effect in the neighbourhood of the emitter-base junction acts as base current, which is amplified

5 General terms

5.1
optical axis
line about which the principal radiation or sensitivity pattern is centered

Note 1 to entry: Unless otherwise stated, the optical axis coincides with the direction of maximum radiation or sensitivity.

AVA Documents
Document Sharing Hub

Full document details: IEC 60747-5-7 2016

5.2
optical port,<semiconductor optoelectronic devices>
geometrical configuration, referenced to an external plane or surface of the device, that is used to specify the optical radiation emitted from an emitting device or accepted by a detecting device

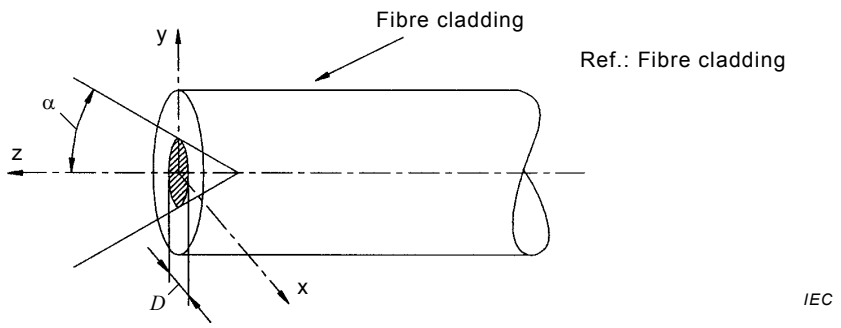

Figure 1a – Device with bare fibre pigtail

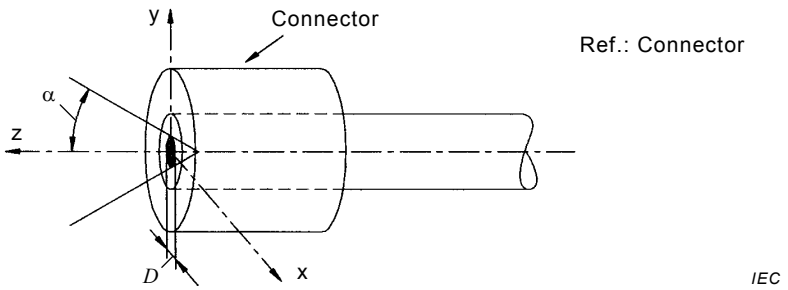

Figure 1b – Device with fibre pigtail connector attached

Key

α emission or acceptance angle

D diameter of the optical port

Ref. reference locus for the definition of the optical port

Figure 1 – Optical port for devices with pigtail (emitter or detector)

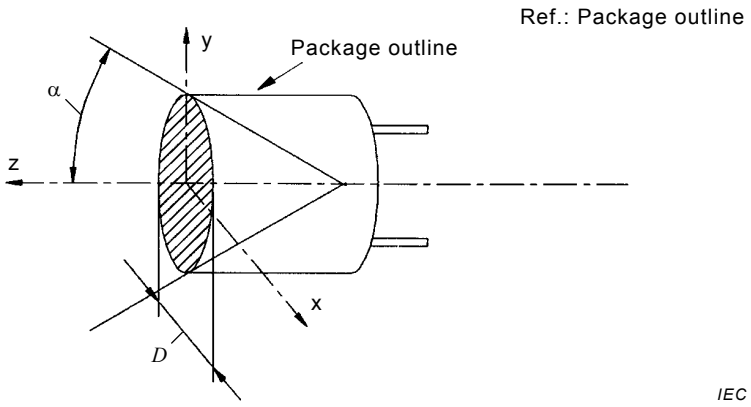

Figure 2a – Device with window, but without lens

Documents
Document Sharing Hub
Full document details: IEC 60747-5-7 2016

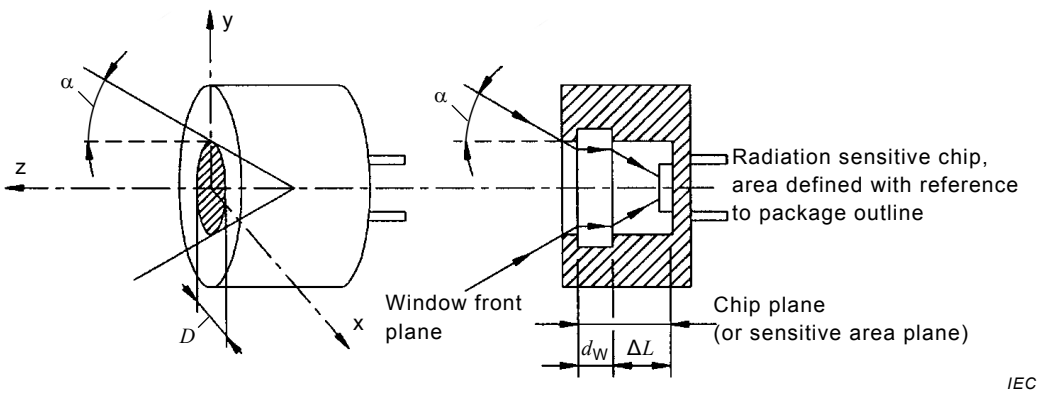

Key

d_W window thickness

α emission or acceptance angle

n refractive index of window material

ΔL distance between window back plane and chip plane

Figure 2b – Detector with window, but without lens (chip referenced)

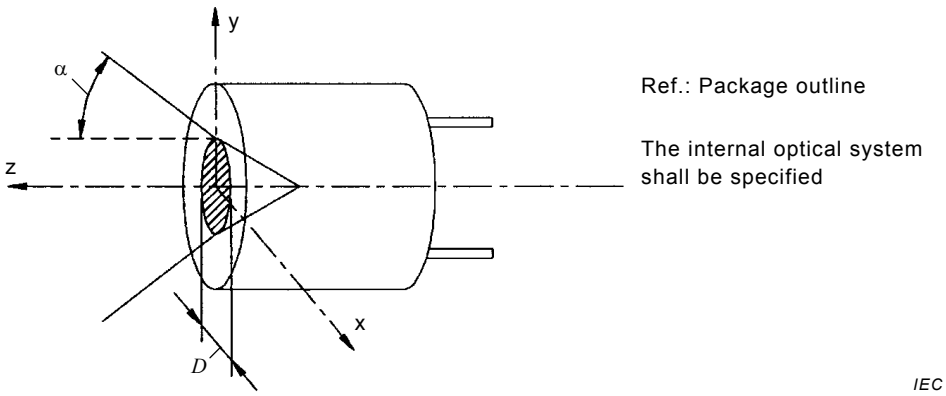

Figure 2c – Detector with lens

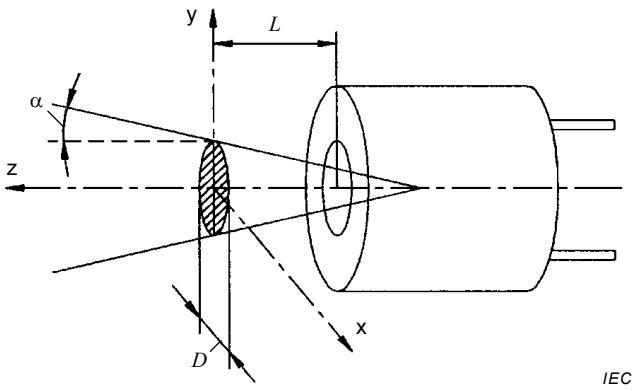

Figure 2d – IRED with optical port that is not located on the output window of the package

Key

α emission or acceptance angle

D diameter of the optical port

Ref. reference locus for the definition of the optical port

Figure 2 – Optical port for packaged devices (emitter or detector), without pigtail

AVA Documents
Document Sharing Hub
Full document details: IEC 60747-5-7 2016

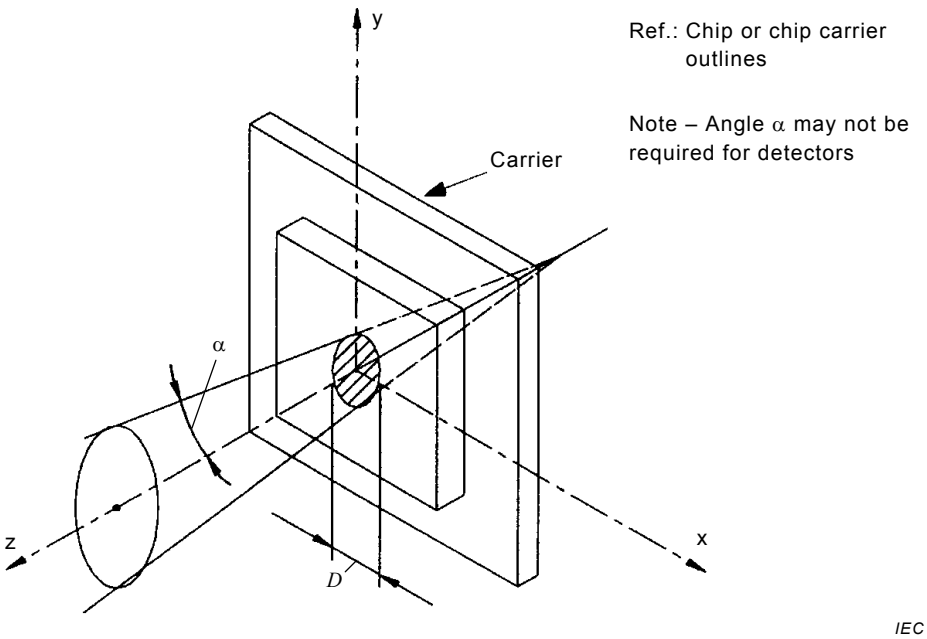

Key

α emission or acceptance angle

D diameter of the optical port

Ref. reference locus for the definition of the optical port

Figure 3 – Optical port for non-packaged devices (emitter or detector) without pigtail

Note 1 to entry: The geometrical configuration shall be specified by the manufacturer by means of geometrical information, e.g.:

– location, shape and size of the area of emission or acceptance,
– angle of emission or acceptance,
– other parameters, e.g. numerical aperture of optical fibre,
– orientation of optical axis.

Note 2 to entry: Figures 1, 2 and 3 above show examples of the optical port for emitting and detecting devices.

5.3
cladding
optical cladding
dielectric material of an optical fibre surrounding the core

[SOURCE: IEC 60050-731:1991, 731-02-05, modified – The term "optical cladding" has been added.]

6 Terms relating to ratings and characteristics

6.1 Switching times

NOTE The specified lower and/or upper limit values referred to in concepts 6.1.1 to 6.1.7 are usually 10 % and 90 % of the amplitude of the pulses. Figure 4 illustrates the concept of switching times, and shows the relation between switching times and the specified lower and/or upper limit values.

Documents
Document Sharing Hub
Full document details: IEC 60747-5-7 2016

6.1.1
turn-on delay time
$t_{d(on)}$
time interval between the lower specified value on the leading edge of the applied input pulse and the lower specified value on the leading edge of the output pulse

6.1.2
rise time
t_r
time interval between the lower specified value and the upper specified value on the leading edge of the output pulse

6.1.3
turn-on time
t_{on}
time interval between the lower specified value on the leading edge of the applied input pulse and the upper specified value on the leading edge of the output pulse

$t_{on} = t_{d(on)} + t_r$

6.1.4
turn-off delay time
$t_{d(off)}$
time interval between the upper specified value on the trailing edge of the applied input pulse and the upper specified value on the trailing edge of the output pulse

Note 1 to entry: If the turn-off delay time is mainly due to carrier storage (e.g. in the output transistor of a photocoupler), the term "(carrier) storage time" and the letter symbol t_s are in use.

6.1.5
fall time
t_f
time interval between the upper specified value and the lower specified value on the trailing edge of the output pulse

6.1.6
turn-off time
t_{off}
time interval between the upper specified value on the trailing edge of the applied input pulse and the lower specified value on the trailing edge of the output pulse

$t_{off} = t_{d(off)} + t_f$

Documents
Document Sharing Hub
Full document details: IEC 60747-5-7 2016

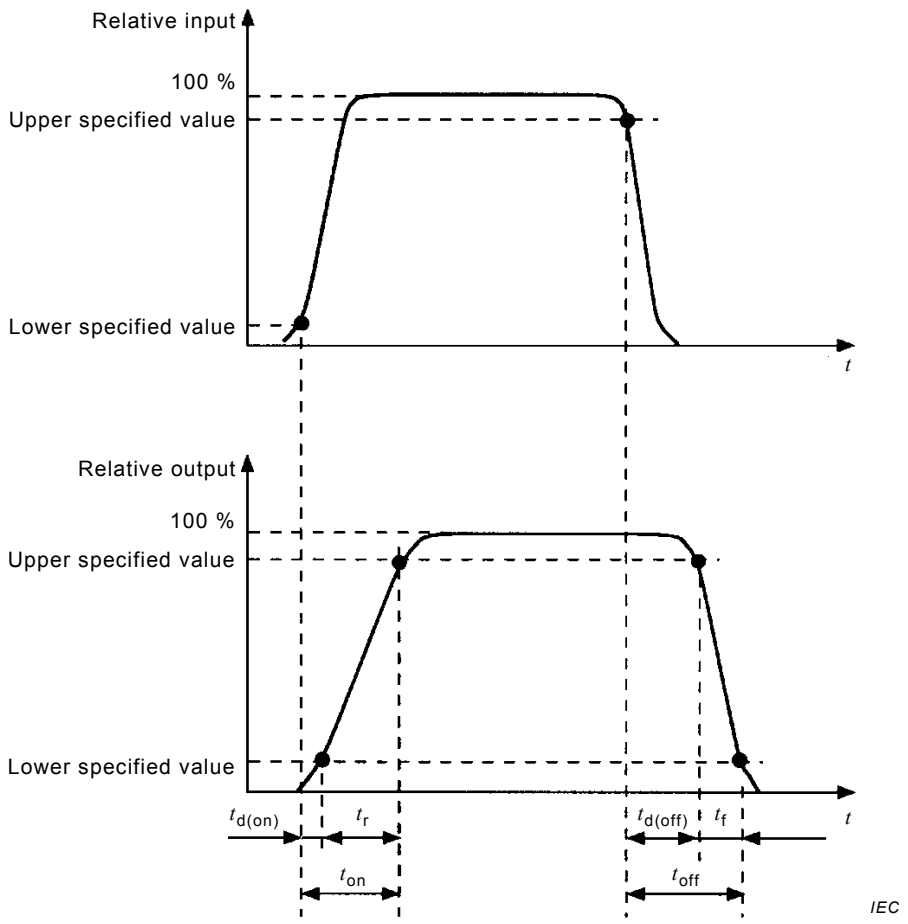

Figure 4 – Switching times

6.2 Photosensitive devices characteristics

NOTE The subscripts D for dark and P for photo are still under consideration.

6.2.1
reverse current under optical radiation, <photodiode>
$I_{R(H)}$
$I_{R(e)}$
I_R
total reverse current when the photodiode is exposed to incident optical radiation

6.2.2
dark current, <photodiode>
$I_{R(D)}$
reverse current in the absence of incident optical radiation

6.2.3
photocurrent, <photodiode>
I_p
part of the reverse current that is caused by incident optical radiation

$I_P = I_{R(H)} - I_{R(D)}$

Documents
Document Sharing Hub
Full document details: IEC 60747-5-7 2016

6.2.4
collector current under optical radiation, <phototransistor>
$I_{C(H)}$
$I_{C(e)}$
I_C
total collector current when the phototransistor is exposed to incident optical radiation

6.2.5
collector-emitter dark current, <phototransistor>
I_{CEO}
collector current in the absence of incident optical radiation

6.2.6
diode sensitivity, <photodiode>
sensitivity, <photodiode>
S_D
S
quotient of the photocurrent I_P, by the irradiance E_e (or illuminance E_v) at the optical port of the photodiode

$$S_D = \frac{I_P}{E_e} \text{ or } S_D = \frac{I_P}{E_v}$$

Note 1 to entry: If no ambiguity is likely to occur, the shorter term and letter symbol may be used.

6.2.7
fibre-input sensitivity, <photodiode irradiated or illuminated from the front end of an optical fibre >
S_{FD}
quotient of the photocurrent I_P, by the radiant power ϕ_e (or luminous flux ϕ_v) emitted from the optical fibre, for specified values of the radial displacement r and the distance z of the front end of the optical fibre, relative to the optical port of the photodiode as shown in Figure 5

$$S_{FD} = \frac{I_P}{\phi_e} \text{ or } S_{FD} = \frac{I_P}{\phi_v}$$

Note 1 to entry: If no ambiguity is likely to occur, the shorter term and letter symbol may be used.

Note 2 to entry: In specifications, usually curves are given showing S_{FD} as a function of r and z.

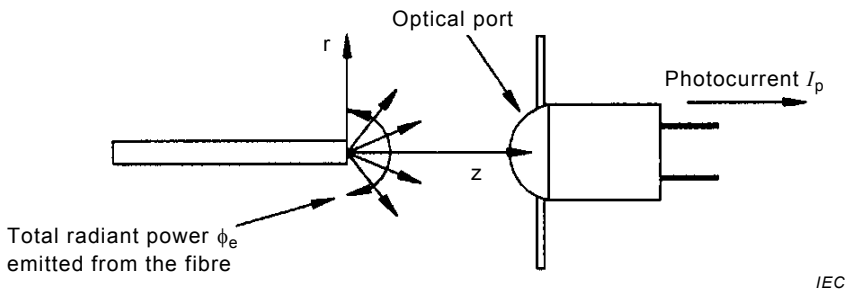

Figure 5 – Fibre-input sensitivity S_{FD}

6.2.8
small-signal cut-off frequency, <photodiode>
f_{cd}
f_c
frequency at which, for constant small signal modulation depth of the input radiant power, the demodulated signal power has decreased to half its low-frequency value

AVA Documents
Document Sharing Hub
Full document details: IEC 60747-5-7 2016

Note 1 to entry: When, for the measurement of f_c, in the case that the photocurrent of the photodiode or the output voltage across the load resistance is observed, it should be noted that 1-to-2 decrease in the demodulated signal power corresponds to 1-to-square root 2 decrease in the photocurrent or output voltage.

6.2.9
large-signal cut-off frequency, <photodiode>
f_{CL}
f_C
frequency at which, for constant large signal modulation depth of the input radiant power, the demodulated signal power has decreased to half its low-frequency value

Note 1 to entry: Measurement should be done within the range that the linear response between the input radiant power and the output photocurrent is assured.

6.2.10
sensitivity diagram, <photosensitive devices>
diagram that characterizes the distribution of sensitivity

$S = f(\theta)$

SEE: Figures 6a and 6b.

Note 1 to entry: The orientation of θ is indicated in Figures 6a and 6b. Unless otherwise stated, the distribution of sensitivity should be specified in a plane. This plane includes the mechanical axis z.

Note 2 to entry: If the sensitivity pattern has a rotational symmetry to the z axis, the sensitivity diagram shall be specified for one plane only.

Note 3 to entry: If the sensitivity pattern has no rotational symmetry to the z axis, sensitivity diagrams for various angles θ shall be specified. Then the x, y and z directions shall be defined by a drawing in the detail specification.

6.2.11
half-sensitivity angle, <photosensitive devices>
$\theta_{S/2}$
in a sensitivity diagram, angle within which the sensitivity is greater than or equal to half the maximum sensitivity

SEE: Figure 6b.

6.2.12
misalignment angle, <photosensitive devices>
$\Delta\theta$
in a sensitivity diagram, angle between the direction for maximum sensitivity (optical axis) and the mechanical axis z

SEE: Figure 6b.

Documents
Document Sharing Hub
Full document details: IEC 60747-5-7 2016