IEC 60793-1-44

Edition 3.0 2023-07

INTERNATIONAL STANDARD

NORME INTERNATIONALE

colour inside

Optical fibres –
Part 1-44: Measurement methods and test procedures – Cut-off wavelength

Fibres optiques –
Partie 1-44: Méthodes de mesure et procédures d'essai – Longueur d'onde de coupure

IEC 60793-1-44:2023-07(en-fr)

Documents
Document Sharing Hub

Full document details: IEC 60793-1-44-2023

THIS PUBLICATION IS COPYRIGHT PROTECTED
Copyright © 2023 IEC, Geneva, Switzerland

All rights reserved. Unless otherwise specified, no part of this publication may be reproduced or utilized in any form or by any means, electronic or mechanical, including photocopying and microfilm, without permission in writing from either IEC or IEC's member National Committee in the country of the requester. If you have any questions about IEC copyright or have an enquiry about obtaining additional rights to this publication, please contact the address below or your local IEC member National Committee for further information.

Droits de reproduction réservés. Sauf indication contraire, aucune partie de cette publication ne peut être reproduite ni utilisée sous quelque forme que ce soit et par aucun procédé, électronique ou mécanique, y compris la photocopie et les microfilms, sans l'accord écrit de l'IEC ou du Comité national de l'IEC du pays du demandeur. Si vous avez des questions sur le copyright de l'IEC ou si vous désirez obtenir des droits supplémentaires sur cette publication, utilisez les coordonnées ci-après ou contactez le Comité national de l'IEC de votre pays de résidence.

IEC Secretariat
3, rue de Varembé
CH-1211 Geneva 20
Switzerland

Tel.: +41 22 919 02 11
info@iec.ch
www.iec.ch

About the IEC
The International Electrotechnical Commission (IEC) is the leading global organization that prepares and publishes International Standards for all electrical, electronic and related technologies.

About IEC publications
The technical content of IEC publications is kept under constant review by the IEC. Please make sure that you have the latest edition, a corrigendum or an amendment might have been published.

IEC publications search - webstore.iec.ch/advsearchform
The advanced search enables to find IEC publications by a variety of criteria (reference number, text, technical committee, …). It also gives information on projects, replaced and withdrawn publications.

IEC Just Published - webstore.iec.ch/justpublished
Stay up to date on all new IEC publications. Just Published details all new publications released. Available online and once a month by email.

IEC Customer Service Centre - webstore.iec.ch/csc
If you wish to give us your feedback on this publication or need further assistance, please contact the Customer Service Centre: sales@iec.ch.

IEC Products & Services Portal - products.iec.ch
Discover our powerful search engine and read freely all the publications previews. With a subscription you will always have access to up to date content tailored to your needs.

Electropedia - www.electropedia.org
The world's leading online dictionary on electrotechnology, containing more than 22 300 terminological entries in English and French, with equivalent terms in 19 additional languages. Also known as the International Electrotechnical Vocabulary (IEV) online.

A propos de l'IEC
La Commission Electrotechnique Internationale (IEC) est la première organisation mondiale qui élabore et publie des Normes internationales pour tout ce qui a trait à l'électricité, à l'électronique et aux technologies apparentées.

A propos des publications IEC
Le contenu technique des publications IEC est constamment revu. Veuillez vous assurer que vous possédez l'édition la plus récente, un corrigendum ou amendement peut avoir été publié.

Recherche de publications IEC - webstore.iec.ch/advsearchform
La recherche avancée permet de trouver des publications IEC en utilisant différents critères (numéro de référence, texte, comité d'études, …). Elle donne aussi des informations sur les projets et les publications remplacées ou retirées.

IEC Just Published - webstore.iec.ch/justpublished
Restez informé sur les nouvelles publications IEC. Just Published détaille les nouvelles publications parues. Disponible en ligne et une fois par mois par email.

Service Clients - webstore.iec.ch/csc
Si vous désirez nous donner des commentaires sur cette publication ou si vous avez des questions contactez-nous: sales@iec.ch.

IEC Products & Services Portal - products.iec.ch
Découvrez notre puissant moteur de recherche et consultez gratuitement tous les aperçus des publications. Avec un abonnement, vous aurez toujours accès à un contenu à jour adapté à vos besoins.

Electropedia - www.electropedia.org
Le premier dictionnaire d'électrotechnologie en ligne au monde, avec plus de 22 300 articles terminologiques en anglais et en français, ainsi que les termes équivalents dans 19 langues additionnelles. Egalement appelé Vocabulaire Electrotechnique International (IEV) en ligne.

AVA Documents
Document Sharing Hub

Full document details: IEC 60793-1-44-2023

IEC 60793-1-44

Edition 3.0 2023-07

INTERNATIONAL STANDARD

NORME INTERNATIONALE

colour inside

Optical fibres –
Part 1-44: Measurement methods and test procedures – Cut-off wavelength

Fibres optiques –
Partie 1-44: Méthodes de mesure et procédures d'essai – Longueur d'onde de coupure

INTERNATIONAL
ELECTROTECHNICAL
COMMISSION

COMMISSION
ELECTROTECHNIQUE
INTERNATIONALE

ICS 33.180.10

ISBN 978-2-8322-7967-0

Warning! Make sure that you obtained this publication from an authorized distributor.
Attention! Veuillez vous assurer que vous avez obtenu cette publication via un distributeur agréé.

Documents
Document Sharing Hub

® Registered trademark of the International Electrotechnical Commission
Marque déposée de la Commission Electrotechnique Internationale

Full document details: IEC 60793-1-44-2023

CONTENTS

FOREWORD 4
1 Scope 6
2 Normative references 6
3 Terms and definitions 6
4 Background 7
5 Overview of methods 7
6 Reference test method 8
7 Apparatus 8
7.1 Light source 8
7.2 Modulation 8
7.3 Launch optics 8
7.4 Support and positioning apparatus 8
7.5 Deployment mandrel 9
7.5.1 General 9
7.5.2 Cable cut-off wavelength deployment, method A 9
7.5.3 Cable cut-off wavelength deployment, method B 9
7.5.4 Fibre cut-off wavelength deployment, method C 9
7.6 Detection optics 10
7.7 Detector assembly and signal detection electronics 10
7.8 Cladding mode stripper 10
8 Sampling specimen 10
8.1 Specimen length 10
8.2 Specimen end face 10
9 Procedure 11
9.1 Positioning of specimen in apparatus 11
9.1.1 General requirements for all methods 11
9.1.2 Deployment requirements for each method 11
9.2 Measurement of output power 11
9.2.1 Overview 11
9.2.2 Bend-reference technique 12
9.2.3 Multimode-reference technique 12
10 Calculations 12
10.1 Bend-reference technique 12
10.2 Multimode-reference technique 13
11 Mapping functions 14
12 Results 14
13 Specification information 15
Annex A (normative) Requirements specific to method A – Cable cut-off wavelength, λ_{CC}, using uncabled fibre 16
A.1 Specimen length 16
A.2 Procedure – Position specimen on deployment mandrel 16
Annex B (normative) Requirements specific to method B – Cable cut-off wavelength, λ_{CC}, using cabled fibre 17
B.1 Specimen length 17
B.2 Procedure – Position specimen on deployment mandrel 17

AVA Documents
Document Sharing Hub
Full document details: IEC 60793-1-44-2023

Annex C (normative) Requirements specific to method C – Fibre cut-off wavelength, λ_C 18
C.1 Specimen length 18
C.2 Procedure – Position specimen on deployment mandrel 18
Annex D (informative) Cut-off curve artifacts 20
D.1 Description of curve artifacts 20
D.2 Curve-fitting technique for artifact filtering 20
D.2.1 Overview 20
D.2.2 General 21
D.2.3 Step 1: define the upper wavelength region 22
D.2.4 Step 2: characterize the spectral transmittance 22
D.2.5 Step 3: calculate the deviation of the spectral transmittance from the linear fit 22
D.2.6 Step 4: determine the end wavelength of the transition region 23
D.2.7 Step 5: determine the start wavelength of the transition region 23
D.2.8 Step 6: characterize the transition region with the theoretical model 23
D.2.9 Step 7: compute the cut-off wavelength, λ_C 24
D.3 Fibre deployment method for artifact attenuation 25
Bibliography 27

Figure 1 – Cut-off measurement system block diagram 7
Figure 2 – Deployment configuration for cable cut-off wavelength λ_{CC}, method A 9
Figure 3 – Deployment configuration for cable cut-off wavelength λ_{CC}, method B 9
Figure 4 – Standard deployment for fibre cut-off wavelength measurement 10
Figure 5 – Cut-off wavelength using the bend-reference technique 11
Figure 6 – Cut-off wavelength using the multimode-reference technique 12
Figure 7 – Cable cut-off vs fibre cut-off for a specific fibre (multimode reference) 14
Figure A.1 – Alternative cable cut-off deployment 16
Figure C.1 – Alternative fibre cut-off deployment – Sliding semi-circle 18
Figure C.2 – Alternative fibre cut-off deployment – Multi-bend 19
Figure C.3 – Alternative fibre cut-off deployment – Large curve 19
Figure D.1 – Cut-off curve with linear fit error (multimode reference) 20
Figure D.2 – Fibre cut-off curve fitting technique (multimode reference) 21
Figure D.3 – Curve fitting regions 21
Figure D.4 – Fibre cut-off curve with artifacts (multimode reference) 25
Figure D.5 – Fibre cut-off curve with artifacts (bend reference) 25
Figure D.6 – Fibre deployment with large diameter bends for mode filtering 26
Figure D.7 – Fibre cut-off curve with mode attenuation (multimode reference) 26

Documents
Document Sharing Hub
Full document details: IEC 60793-1-44-2023

INTERNATIONAL ELECTROTECHNICAL COMMISSION

OPTICAL FIBRES –

Part 1-44: Measurement methods and test procedures – Cut-off wavelength

FOREWORD

1) The International Electrotechnical Commission (IEC) is a worldwide organization for standardization comprising all national electrotechnical committees (IEC National Committees). The object of IEC is to promote international co-operation on all questions concerning standardization in the electrical and electronic fields. To this end and in addition to other activities, IEC publishes International Standards, Technical Specifications, Technical Reports, Publicly Available Specifications (PAS) and Guides (hereafter referred to as "IEC Publication(s)"). Their preparation is entrusted to technical committees; any IEC National Committee interested in the subject dealt with may participate in this preparatory work. International, governmental and non-governmental organizations liaising with the IEC also participate in this preparation. IEC collaborates closely with the International Organization for Standardization (ISO) in accordance with conditions determined by agreement between the two organizations.
2) The formal decisions or agreements of IEC on technical matters express, as nearly as possible, an international consensus of opinion on the relevant subjects since each technical committee has representation from all interested IEC National Committees.
3) IEC Publications have the form of recommendations for international use and are accepted by IEC National Committees in that sense. While all reasonable efforts are made to ensure that the technical content of IEC Publications is accurate, IEC cannot be held responsible for the way in which they are used or for any misinterpretation by any end user.
4) In order to promote international uniformity, IEC National Committees undertake to apply IEC Publications transparently to the maximum extent possible in their national and regional publications. Any divergence between any IEC Publication and the corresponding national or regional publication shall be clearly indicated in the latter.
5) IEC itself does not provide any attestation of conformity. Independent certification bodies provide conformity assessment services and, in some areas, access to IEC marks of conformity. IEC is not responsible for any services carried out by independent certification bodies.
6) All users should ensure that they have the latest edition of this publication.
7) No liability shall attach to IEC or its directors, employees, servants or agents including individual experts and members of its technical committees and IEC National Committees for any personal injury, property damage or other damage of any nature whatsoever, whether direct or indirect, or for costs (including legal fees) and expenses arising out of the publication, use of, or reliance upon, this IEC Publication or any other IEC Publications.
8) Attention is drawn to the Normative references cited in this publication. Use of the referenced publications is indispensable for the correct application of this publication.
9) Attention is drawn to the possibility that some of the elements of this IEC Publication may be the subject of patent rights. IEC shall not be held responsible for identifying any or all such patent rights.

IEC 60793-1-44 has been prepared by subcommittee 86A: Fibres and cables, of IEC technical committee 86: Fibre optics. It is an International Standard.

This third edition cancels and replaces the second edition published in 2011. This edition constitutes a technical revision.

This edition includes the following significant technical changes with respect to the previous edition:

a) used the diameter of the fibre loops to describe deployment;
b) added Annex D related to cut-off curve artifacts;
c) reorganized information and added more figures to clarify concepts.

Documents
Document Sharing Hub

Full document details: IEC 60793-1-44-2023

The text of this International Standard is based on the following documents:

Draft	Report on voting
86A/2314/FDIS	86A/2327/RVD

Full information on the voting for its approval can be found in the report on voting indicated in the above table.

The language used for the development of this International Standard is English.

This document was drafted in accordance with ISO/IEC Directives, Part 2, and developed in accordance with ISO/IEC Directives, Part 1 and ISO/IEC Directives, IEC Supplement, available at www.iec.ch/members_experts/refdocs. The main document types developed by IEC are described in greater detail at www.iec.ch/publications.

This document is to be read in conjunction with IEC 60793-1-1.

A list of all parts of the IEC 60793-1 series, published under the general title *Optical fibres – Measurement methods and test procedures*, can be found on the IEC website.

The committee has decided that the contents of this document will remain unchanged until the stability date indicated on the IEC website under webstore.iec.ch in the data related to the specific document. At this date, the document will be

- reconfirmed,
- withdrawn,
- replaced by a revised edition, or
- amended.

IMPORTANT – The "colour inside" logo on the cover page of this document indicates that it contains colours which are considered to be useful for the correct understanding of its contents. Users should therefore print this document using a colour printer.

Documents
Document Sharing Hub

Full document details: IEC 60793-1-44-2023

OPTICAL FIBRES –

Part 1-44: Measurement methods and test procedures – Cut-off wavelength

1 Scope

This part of IEC 60793 establishes uniform requirements for measuring the cut-off wavelength of single-mode optical fibre, thereby assisting in the inspection of fibres and cables for commercial purposes.

This document gives methods for measuring the cut-off wavelength for uncabled or cabled single mode telecom fibre. These procedures apply to all category B and C fibre types.

There are three methods of deployment for measuring the cut-off wavelength:

- method A: cable cut-off using uncabled fibre 22 m long sample, λ_{cc};
- method B: cable cut-off using cabled fibre 22 m long sample, λ_{cc};
- method C: fibre cut-off using uncabled fibre 2 m long sample, λ_c.

All methods require a reference measurement. There are two reference-scan techniques, either or both of which can be used with all methods:

- bend-reference technique;
- multimode-reference technique using category A1(OM1-OM5) multimode fibre.

2 Normative references

The following documents are referred to in the text in such a way that some or all of their content constitutes requirements of this document. For dated references, only the edition cited applies. For undated references, the latest edition of the referenced document (including any amendments) applies.

IEC 60793-1-1, *Optical fibres – Part 1-1: Measurement methods and test procedures – General and guidance*

3 Terms and definitions

No terms and definitions are listed in this document.

ISO and IEC maintain terminology databases for use in standardization at the following addresses:

- IEC Electropedia: available at https://www.electropedia.org/
- ISO Online browsing platform: available at https://www.iso.org/obp

Documents
Document Sharing Hub

Full document details: IEC 60793-1-44-2023

4 Background

Theoretical cut-off wavelength is the shortest wavelength at which only the fundamental mode can propagate in a single-mode fibre, as computed from the refractive index profile of the fibre.

In optical fibres, the change from multimode to single mode behaviour does not occur at an isolated wavelength, but rather smoothly over a range of wavelengths. For purposes of determining fibre performance in a telecommunications network, theoretical cut-off wavelength is less useful than the lower value actually measured when the fibre is deployed.

Measured cut-off wavelength is defined as the wavelength greater than which the ratio between the total power, including launched higher-order modes, and the fundamental mode power has decreased to less than 0,1 dB. According to this definition, the second-order (LP_{11}) mode undergoes 19,3 dB more attenuation than the fundamental (LP_{01}) mode at the cut-off wavelength.

Because measured cut-off wavelength depends on the length and bends of the fibre, the resulting value of cut-off wavelength depends on whether the measured fibre is configured in a deployed, cabled condition or if it is short and uncabled. Consequently, there are two overall types of cut-off wavelength:

- cable cut-off wavelength (λ_{cc}) measured in an uncabled fibre deployment condition (method A), or in a cabled condition (method B);
- fibre cut-off wavelength (λ_c) measured on a short length of uncabled, primary-coated fibre (method C).

Cable cut-off wavelength is the preferred attribute to be specified and measured.

5 Overview of methods

All of the methods shall use the transmitted-power technique. A general system block diagram is depicted in Figure 1. A fibre specimen is scanned by a wavelength spectrum. The output optical power is measured and stored. This stored data is then analysed against a reference power spectrum. The reference scan normalizes any wavelength-dependent fluctuations in the measurement equipment that is not associated with the loss of the LP_{11} mode. The resulting attenuation will thus properly characterize the cut-off wavelength.

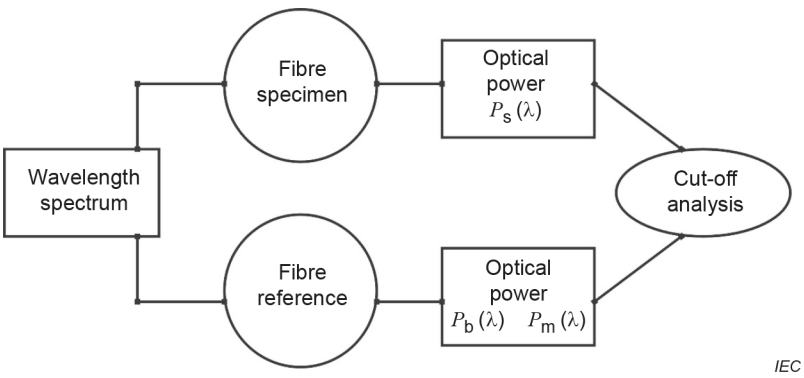

Figure 1 – Cut-off measurement system block diagram

The reference scan uses one of the following two techniques:

- bend reference where a small diameter bend is added to the fibre specimen;
- multimode reference where the optical power through an A1(OM1-OM5) fibre is measured.

AVA Documents Document Sharing Hub

Either reference technique can determine the cut-off wavelength of a fibre specimen in a cabled or uncabled condition.

The fibre cut-off wavelength, λ_c, measured under the standard length and bend conditions described in this document, will generally exhibit a value larger than the cable cut-off wavelength, λ_{cc}. For normal installed cable spans, it is common for the measured λ_c value to exceed the long fibre's transmission wavelength.

Cable cut-off wavelength is more useful in describing an installed network system performance and capability, while fibre cut-off would apply to short cables or pigtails. The two cut-off wavelengths can be mapped to each other for a specific fibre type and cut-off measurement method. The customer and the supplier shall agree to the confidence level of each mapping function established (see Clause 11 for details).

6 Reference test method

Method A, cable cut-off wavelength using uncabled fibre, is the reference test method (RTM). This method shall be used to settle any disputes.

7 Apparatus

7.1 Light source

Provide a filtered white light source, with line width not greater than 10 nm, stable in position and intensity. The light source should be capable of operating over the wavelength range 1 000 nm to 1 600 nm for most category B fibres. An operating range of 800 nm to 1 700 nm may be necessary for some B-655 fibres, B-656 fibres or category C fibres. A scanning monochromator with a halogen bulb is one example of this kind of source.

7.2 Modulation

Modulate the light source to prevent ambient light affecting the results, and to aid signal recovery. A mechanical chopper with a reference output is a suitable arrangement.

7.3 Launch optics

Provide launch optics, such as a lens system or a multimode fibre, to overfill the test fibre over the full range of measurement wavelengths. This launch is relatively insensitive to the input end face position of the single-mode fibre and is able to excite the fundamental and any higher-order modes in the specimen. If using a butt splice, provide means of avoiding interference effects.

When using a multimode fibre, overfilling the reference fibre can produce an undesired ripple effect in the power-transmission spectrum. Restrict the launch sufficiently to eliminate the ripple effect. One example of restricted launch is in method A, attenuation by cut-back, of IEC 60793-1-40. Another example of restricted launch is a mandrel-wrap mode filter with sufficient (approximately 4 dB) insertion loss.

7.4 Support and positioning apparatus

Provide a means to stably support the input and output ends of the specimen for the duration of the test; vacuum chucks, magnetic chucks, or connectors may be used for this purpose. Support the fibre ends such that they can be repeatedly positioned in the launch and detection optics. When measuring λ_{cc} in method B, provide a means to suitably support the cable ends. The mechanism used to hold the fibre ends allows for fibre positioning with respect to the launch and detection optics. Holding and moving of the fibre should not cause micro-bends that affect the measurement accuracy.

Documents
Document Sharing Hub
Full document details: IEC 60793-1-44-2023

7.5 Deployment mandrel

7.5.1 General

The fibre specimen's two ends, input and output, are mechanically held in place during the measurement. The deployment and length of the specimen, together with the support apparatus, are key elements of the measurement method, and they distinguish the types of cut-off wavelength.

Additional, alternative deployments may be used if the results obtained have been demonstrated to be empirically equivalent to the results obtained using the standard deployment, to within 10 nm, or they are greater than those achieved with the standard configurations.

7.5.2 Cable cut-off wavelength deployment, method A

Provide a means to make an 80 mm diameter loop at each end of the specimen and a loop of diameter ≥ 280 mm in the central portion. See Figure 2.

Dimensions in millimetres

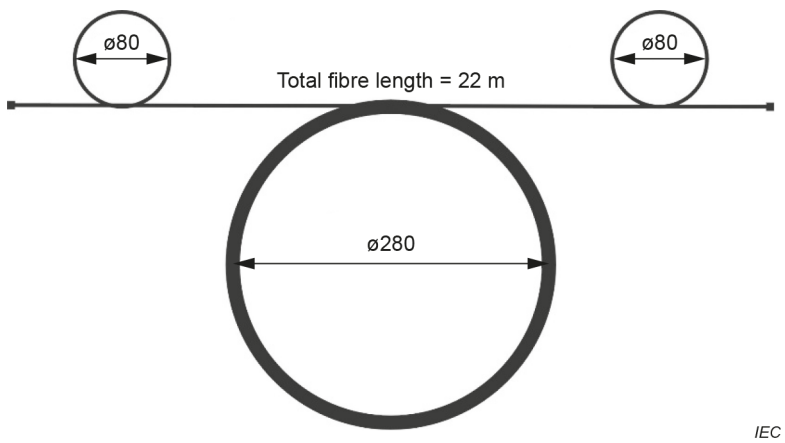

Figure 2 – Deployment configuration for cable cut-off wavelength λ_{cc}, method A

7.5.3 Cable cut-off wavelength deployment, method B

Provide a means to make an 80 mm diameter loop at each end of the specimen. See Figure 3. The cabled fibre between the two 80 mm loops has a bending diameter greater than 280 mm.

Dimensions in millimetres

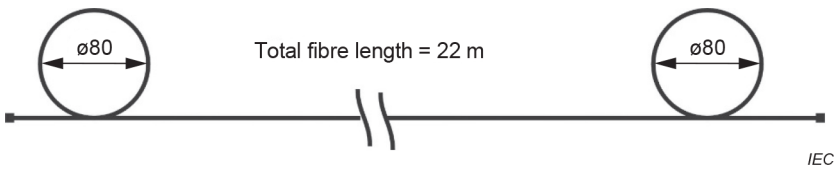

Figure 3 – Deployment configuration for cable cut-off wavelength λ_{cc}, method B

7.5.4 Fibre cut-off wavelength deployment, method C

Provide means to route a fibre specimen through one complete circular loop having a diameter equal to 280 mm, see Figure 4.

Documents
Document Sharing Hub
Full document details: IEC 60793-1-44-2023

Dimensions in millimetres

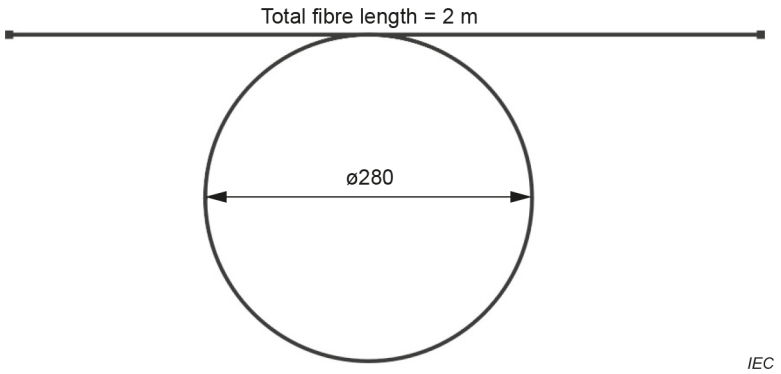

Figure 4 – Standard deployment for fibre cut-off wavelength measurement

7.6 Detection optics

Couple all power emitted from the specimen onto the active region of the detector. As examples, an optical lens system, a butt splice with a multimode fibre pigtailed to a detector, or direct coupling may be used.

7.7 Detector assembly and signal detection electronics

Use a detector that is sensitive to the output radiation over the range of wavelengths to be measured and that is linear over the range of intensities encountered. A typical system might include a germanium or InGaAs photodiode, operating in the photo-voltaic mode, and a current-sensitive preamplifier, with synchronous detection by a lock-in amplifier. Generally, a computer is required to analyse the data.

7.8 Cladding mode stripper

Provide a means to remove cladding-mode power from the specimen. Under some circumstances, the fibre coating will perform this function; otherwise, provide methods or devices that extract cladding-mode power at the input and output ends of the specimen.

8 Sampling specimen

8.1 Specimen length

Choose the specimen length according to which parameter is being measured and, if the parameter is cable cut-off wavelength, the method to be used. See the appropriate annex: Annex A or Annex B for the cable cut-off wavelength measurement or Annex C for fibre cut-off wavelength.

8.2 Specimen end face

Prepare a flat end face, orthogonal to the fibre axis, at the input and output ends of each specimen. An optical fibre cleaver is often used to achieve very flat and clean end faces.

Documents
Document Sharing Hub
Full document details: IEC 60793-1-44-2023

9 Procedure

9.1 Positioning of specimen in apparatus

9.1.1 General requirements for all methods

Align the input and output ends of the specimen to the launch and detection optics. Do not change the launch and detection conditions during the course of the measurement.

Unless otherwise specified, when installing the specimen in the apparatus, and when using a cladding-mode stripper, avoid imposing any additional fibre bends smaller than those specified in the configuration for the particular measurement being made.

9.1.2 Deployment requirements for each method

Deploy the specimen using the information in Clause 7 and the following annexes:

- cable cut-off wavelength, method A (see Annex A);
- cable cut-off wavelength, method B (see Annex B);
- fibre cut-off wavelength, method C (see Annex C).

9.2 Measurement of output power

9.2.1 Overview

Record the output power, $P_s(\lambda)$, along the wavelength range, in increments of 10 nm or less. The range shall be broad enough to encompass the expected cut-off wavelength. The measured power is then normalized by the reference power producing curves similar to Figure 5, bend reference and Figure 6 multimode reference.

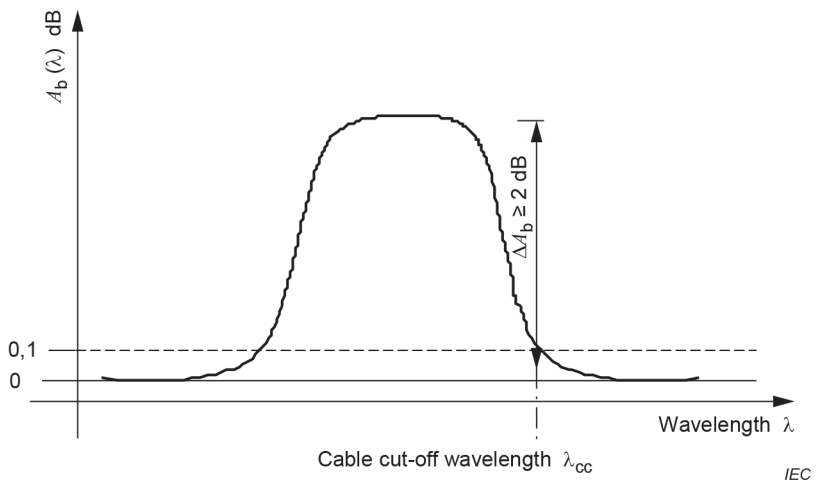

Figure 5 – Cut-off wavelength using the bend-reference technique

Documents
Document Sharing Hub
Full document details: IEC 60793-1-44-2023

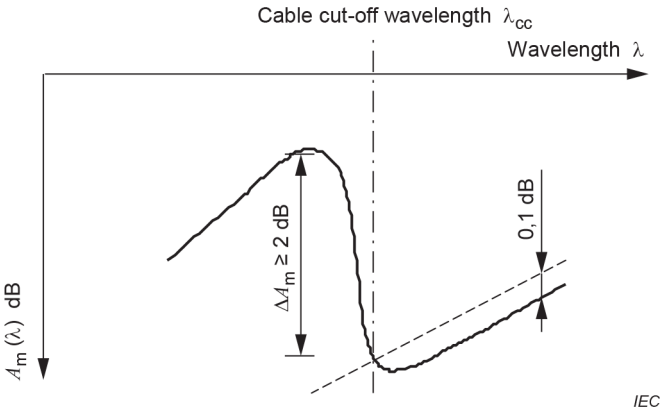

Figure 6 – Cut-off wavelength using the multimode-reference technique

9.2.2 Bend-reference technique

With input and output conditions unchanged, introduce a smaller-diameter bend between input and the output. Record the transmitted spectral power, $P_b(\lambda)$, over the same wavelength range and with the same spectral increments as in making the original measurement on the specimen.

The exact value of the smaller diameter may be determined prior to measurement; it should be small enough to attenuate the second-order mode, but not too small in order to avoid macrobending effects at higher wavelengths. A diameter between 20 mm and 60 mm is typical for most B652 to B656 fibres.

For some bend insensitive fibres (category B-657), the diameter may need to be smaller, and this measurement technique may not be adequate for these fibres. Curve artifacts can persist and require the use of both techniques described in Annex D.

9.2.3 Multimode-reference technique

Replace the specimen with a short (< 10 m) length of category A1(OM1-OM5) multimode fibre as a reference. Record the transmitted signal power, $P_m(\lambda)$, over the same wavelength range and with the same spectral increments as in making the original measurement on the specimen.

NOTE Ripples can occur in the reference spectrum $P_m(\lambda)$. Provide a means to add mode mixing which can reduce this effect; this can be done by wrapping a multimode fibre at least 5 times around a mandrel 10 mm to 20 mm in diameter. A1(OM2-OM5) type multimode fibres are preferred for this technique.

10 Calculations

10.1 Bend-reference technique

Calculate the spectral transmittance of the specimen without the small diameter bend, referenced to the condition where the smaller-radius bend is introduced:

$$A_b(\lambda) = 10\log_{10}\frac{P_s(\lambda)}{P_b(\lambda)} \text{ in dB} \quad (1)$$

Documents
Document Sharing Hub
Full document details: IEC 60793-1-44-2023

where

$A_b(\lambda)$ is the spectral transmittance referenced to the small diameter bend (dB);

$P_s(\lambda)$ is the spectral optical power through the fibre specimen;

$P_b(\lambda)$ is the spectral optical power through the sample with small diameter bend.

Figure 5 shows a schematic result. The short and long wavelength edges are determined by the specimen deployed with and without the smaller-radius bend, respectively. Determine the longest wavelength at which $A_b(\lambda)$ = 0,1 dB from Figure 5. This is the cut-off wavelength, provided that ΔA_b is equal to or greater than 2 dB.

If ΔA_b < 2 dB, or if it is unobservable, broaden the wavelength scan and enlarge the single-mode launch conditions, or decrease the smaller-bend radius. Repeat these adjustments and the measurement procedure until ΔA_b > 2 dB.

For certain implementations of bend-insensitive fibres (category B-657), ΔA_b will not reach 2 dB loss, because of the very nature of these fibres. It is recommended to use the multimode-reference technique as reference scan for these fibres. See Annex D for dealing with curve artifacts that can affect the results.

10.2 Multimode-reference technique

Calculate the spectral transmittance of the specimen, referenced to that of the multimode fibre:

$$A_m(\lambda) = 10\log_{10}\frac{P_s(\lambda)}{P_m(\lambda)} \tag{2}$$

where

$A_m(\lambda)$ is the spectral transmittance referenced to the multimode fibre (dB);

$P_s(\lambda)$ is the spectral optical power through the specimen;

$P_m(\lambda)$ is the spectral optical power through the multimode reference fibre.

Figure 6 shows a schematic result.

Fit a straight line to the long-wavelength portion of $A_m(\lambda)$, displacing it upward by 0,1 dB, as shown by the dashed line in Figure 6. Determine the longest wavelength at which this displaced line intersects with $A_m(\lambda)$. This is the cut-off wavelength, provided that ΔA_m is equal to or greater than 2 dB. Between measured data points, $A_m(\lambda)$ is defined by linear interpolation.

If ΔA_m < 2 dB, or if it is unobservable, broaden the wavelength scan and enlarge the single-mode launch conditions. Repeat these adjustments and the measurement procedure until ΔA_m > 2 dB, and until the long-wavelength tail is of adequate length to be fitted by a straight line.

NOTE When using the multimode-reference technique, fibres with high cut-off wavelengths, when combined with reference fibres with high water peaks, can have erroneous values reported as cut-off wavelength.

For certain implementations of bend-insensitive fibres (category B-657), the bend-reference technique is not the optimal technique as reference scan. For these fibres, the multimode-reference technique is recommended. See Annex D for dealing with curve artifacts that can affect the results.

AVA Documents
Document Sharing Hub

Full document details: IEC 60793-1-44-2023

11 Mapping functions

A mapping function is a formula by which the measured results of one type of cut-off wavelength are used to predict the results that one would obtain from another type. Figure 7 illustrates the cut-off wavelength difference between the fibre cut-off method C and the cable cut-off method A for a specific fibre type.

An empirical mapping function is specific to a particular fibre type and method. Generate mapping functions by doing an experiment in which a variety of fibre specimens between the two fibre deployment methods are sampled. A linear regression of the respective values will often produce a satisfactory mapping function. When establishing criteria for fibre selection, residual errors in the regression shall be taken into account.

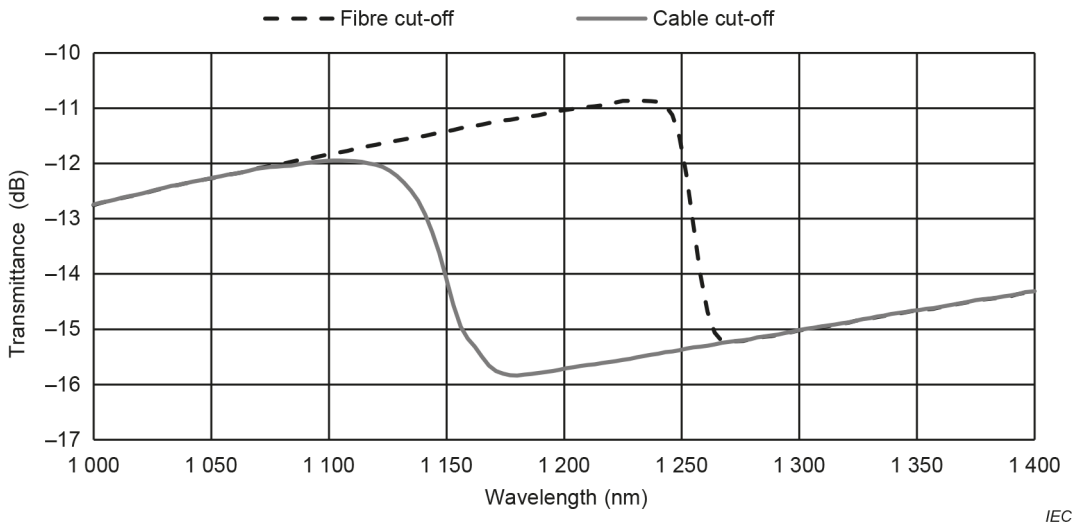

Figure 7 – Cable cut-off vs fibre cut-off for a specific fibre (multimode reference)

12 Results

12.1 Report the following information with each measurement:

- date and title of measurement;
- identification of specimen;
- measurement results.

12.2 The following information shall be available upon request:

- if measuring cable cut-off wavelength, the method used: A or B;
- length of specimen;
- reference technique used (bend or multimode);
- type of multimode fibre used (if using multimode-reference technique);
- description of all key equipment used: light source, launch optics, cladding-mode stripper, specimen-support mechanisms, and detection optics;
- description of monochromator (spectral scanning range, spectral width, and incremental steps);
- description of detection and recording techniques;
- description of deployment configuration used;

Documents
Document Sharing Hub
Full document details: IEC 60793-1-44-2023

- typical plot of the spectral curve, $A_b(\lambda)$ or $A_m(\lambda)$;
- date and certificate of latest calibration of measurement equipment.

13 Specification information

The detail specification shall specify the following information:

- type of fibre or cable to be measured;
- failure or acceptance criteria;
- information to be reported;
- any deviations to the procedure that apply.

Documents
Document Sharing Hub

Full document details: IEC 60793-1-44-2023

Annex A
(normative)

Requirements specific to method A – Cable cut-off wavelength, λ_{cc}, using uncabled fibre

A.1 Specimen length

Use a 22 m ± 1 m total length of (uncabled) optical fibre.

A.2 Procedure – Position specimen on deployment mandrel

In order to conservatively simulate cabling effects, the specimen has a central coil 20 m long with a minimum diameter of 280 mm (see Figure 2). The 20 m fibre coil has a minimum diameter of 280 mm and should be loosely coiled with minimal stress. The remaining fibre is used to create two 1 m long ends. This specimen is then placed in front of the measurement instrument where an 80 mm diameter loop is applied to each end. The 80 mm loops simulate the effects of a splice organizer. Figure A.1 shows an alternative deployment method for cable cut-off. Alternative to placing loop at each end, two 80 mm loops can be place at one end.

Since λ_{cc} represents a maximum cut-off value, this configuration is sufficient to ensure specification compliance, because any further effects of cabling, installation, and deployment can only reduce further the cable cut-off wavelength value.

Dimensions in millimetres

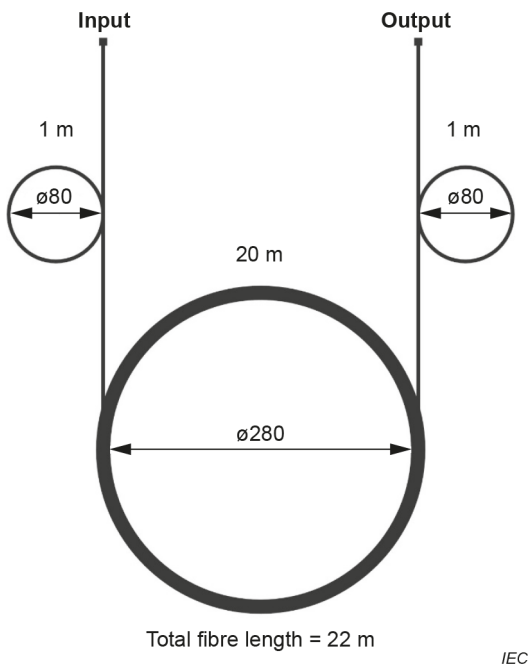

Figure A.1 – Alternative cable cut-off deployment

Documents
Document Sharing Hub
Full document details: IEC 60793-1-44-2023