IEC 60794-1-111

Edition 1.0 2023-09

INTERNATIONAL STANDARD

NORME INTERNATIONALE

colour inside

Optical fibre cables –
Part 1-111: Generic specification – Basic optical cable test procedures – Mechanical tests methods – Bend, method E11

Câbles à fibres optiques –
Partie 1-111: Spécification générique – Procédures fondamentales d'essais des câbles optiques – Méthodes d'essai mécanique – Courbures, méthode E11

IEC 60794-1-111:2023-09(en-fr)

Documents
Document Sharing Hub

Full document details: IEC 60794-1-111-2023

THIS PUBLICATION IS COPYRIGHT PROTECTED
Copyright © 2023 IEC, Geneva, Switzerland

All rights reserved. Unless otherwise specified, no part of this publication may be reproduced or utilized in any form or by any means, electronic or mechanical, including photocopying and microfilm, without permission in writing from either IEC or IEC's member National Committee in the country of the requester. If you have any questions about IEC copyright or have an enquiry about obtaining additional rights to this publication, please contact the address below or your local IEC member National Committee for further information.

Droits de reproduction réservés. Sauf indication contraire, aucune partie de cette publication ne peut être reproduite ni utilisée sous quelque forme que ce soit et par aucun procédé, électronique ou mécanique, y compris la photocopie et les microfilms, sans l'accord écrit de l'IEC ou du Comité national de l'IEC du pays du demandeur. Si vous avez des questions sur le copyright de l'IEC ou si vous désirez obtenir des droits supplémentaires sur cette publication, utilisez les coordonnées ci-après ou contactez le Comité national de l'IEC de votre pays de résidence.

IEC Secretariat
3, rue de Varembé
CH-1211 Geneva 20
Switzerland

Tel.: +41 22 919 02 11
info@iec.ch
www.iec.ch

About the IEC
The International Electrotechnical Commission (IEC) is the leading global organization that prepares and publishes International Standards for all electrical, electronic and related technologies.

About IEC publications
The technical content of IEC publications is kept under constant review by the IEC. Please make sure that you have the latest edition, a corrigendum or an amendment might have been published.

IEC publications search - webstore.iec.ch/advsearchform
The advanced search enables to find IEC publications by a variety of criteria (reference number, text, technical committee, …). It also gives information on projects, replaced and withdrawn publications.

IEC Just Published - webstore.iec.ch/justpublished
Stay up to date on all new IEC publications. Just Published details all new publications released. Available online and once a month by email.

IEC Customer Service Centre - webstore.iec.ch/csc
If you wish to give us your feedback on this publication or need further assistance, please contact the Customer Service Centre: sales@iec.ch.

IEC Products & Services Portal - products.iec.ch
Discover our powerful search engine and read freely all the publications previews. With a subscription you will always have access to up to date content tailored to your needs.

Electropedia - www.electropedia.org
The world's leading online dictionary on electrotechnology, containing more than 22 300 terminological entries in English and French, with equivalent terms in 19 additional languages. Also known as the International Electrotechnical Vocabulary (IEV) online.

A propos de l'IEC
La Commission Electrotechnique Internationale (IEC) est la première organisation mondiale qui élabore et publie des Normes internationales pour tout ce qui a trait à l'électricité, à l'électronique et aux technologies apparentées.

A propos des publications IEC
Le contenu technique des publications IEC est constamment revu. Veuillez vous assurer que vous possédez l'édition la plus récente, un corrigendum ou amendement peut avoir été publié.

Recherche de publications IEC - webstore.iec.ch/advsearchform
La recherche avancée permet de trouver des publications IEC en utilisant différents critères (numéro de référence, texte, comité d'études, …). Elle donne aussi des informations sur les projets et les publications remplacées ou retirées.

IEC Just Published - webstore.iec.ch/justpublished
Restez informé sur les nouvelles publications IEC. Just Published détaille les nouvelles publications parues. Disponible en ligne et une fois par mois par email.

Service Clients - webstore.iec.ch/csc
Si vous désirez nous donner des commentaires sur cette publication ou si vous avez des questions contactez-nous: sales@iec.ch.

IEC Products & Services Portal - products.iec.ch
Découvrez notre puissant moteur de recherche et consultez gratuitement tous les aperçus des publications. Avec un abonnement, vous aurez toujours accès à un contenu à jour adapté à vos besoins.

Electropedia - www.electropedia.org
Le premier dictionnaire d'électrotechnologie en ligne au monde, avec plus de 22 300 articles terminologiques en anglais et en français, ainsi que les termes équivalents dans 19 langues additionnelles. Egalement appelé Vocabulaire Electrotechnique International (IEV) en ligne.

AVA Documents
Document Sharing Hub

Full document details: IEC 60794-1-111-2023

IEC 60794-1-111

Edition 1.0 2023-09

INTERNATIONAL STANDARD

NORME INTERNATIONALE

colour inside

Optical fibre cables –
Part 1-111: Generic specification – Basic optical cable test procedures – Mechanical tests methods – Bend, method E11

Câbles à fibres optiques –
Partie 1-111: Spécification générique – Procédures fondamentales d'essais des câbles optiques – Méthodes d'essai mécanique – Courbures, méthode E11

INTERNATIONAL
ELECTROTECHNICAL
COMMISSION

COMMISSION
ELECTROTECHNIQUE
INTERNATIONALE

ICS 33.180.10

ISBN 978-2-8322-7518-4

Warning! Make sure that you obtained this publication from an authorized distributor.
Attention! Veuillez vous assurer que vous avez obtenu cette publication via un distributeur agréé.

Documents
Document Sharing Hub

® Registered trademark of the International Electrotechnical Commission
Marque déposée de la Commission Electrotechnique Internationale

Full document details: IEC 60794-1-111-2023

CONTENTS

FOREWORD 3
INTRODUCTION 5
1 Scope 6
2 Normative references 6
3 Terms and definitions 6
4 General 6
4.1 Sample 6
4.2 Apparatus 7
4.3 Test methods 7
4.4 Test conditions 7
5 Method E11A – Bend as helix 7
5.1 General 7
5.2 Single-helix configuration 8
5.3 Two-helix configuration 9
5.4 Procedure 10
6 Method E11B – U bend 10
7 Requirements 11
8 Details to be specified 11
9 Details to be reported 12
Annex A (informative) Example of a special mandrel for two-helix configuration 13
Annex B (informative) Rationale for the options of an equal or larger turnaround loop diameter for the two-helix configuration of method E11A 14
Bibliography 19

Figure 1 – Bend test set-up for method E11A: single-helix configuration 8
Figure 2 – Bend test set-up for method E11A: two-helix configuration 9
Figure 3 – Bend test set-up for method E11B 11
Figure A.1 – Example of a special mandrel 13
Figure B.1 – Options for turnaround loop size for two-helix configuration of method E11A 14
Figure B.2 – Difference of change in attenuation for single-mode cable 17
Figure B.3 – Difference of change in attenuation for multimode cable 17
Figure B.4 – Worst case difference of change in attenuation 18

Table B.1 – Used change in attenuation values 15
Table B.2 – Calculated changes in attenuation of single-mode cable 15
Table B.3 – Calculated changes in attenuation of multimode cable 16

Documents
Document Sharing Hub
Full document details: IEC 60794-1-111-2023

INTERNATIONAL ELECTROTECHNICAL COMMISSION

OPTICAL FIBRE CABLES –

Part 1-111: Generic specification – Basic optical cable test procedures – Mechanical test methods – Bend, method E11

FOREWORD

1) The International Electrotechnical Commission (IEC) is a worldwide organization for standardization comprising all national electrotechnical committees (IEC National Committees). The object of IEC is to promote international co-operation on all questions concerning standardization in the electrical and electronic fields. To this end and in addition to other activities, IEC publishes International Standards, Technical Specifications, Technical Reports, Publicly Available Specifications (PAS) and Guides (hereafter referred to as "IEC Publication(s)"). Their preparation is entrusted to technical committees; any IEC National Committee interested in the subject dealt with may participate in this preparatory work. International, governmental and non-governmental organizations liaising with the IEC also participate in this preparation. IEC collaborates closely with the International Organization for Standardization (ISO) in accordance with conditions determined by agreement between the two organizations.
2) The formal decisions or agreements of IEC on technical matters express, as nearly as possible, an international consensus of opinion on the relevant subjects since each technical committee has representation from all interested IEC National Committees.
3) IEC Publications have the form of recommendations for international use and are accepted by IEC National Committees in that sense. While all reasonable efforts are made to ensure that the technical content of IEC Publications is accurate, IEC cannot be held responsible for the way in which they are used or for any misinterpretation by any end user.
4) In order to promote international uniformity, IEC National Committees undertake to apply IEC Publications transparently to the maximum extent possible in their national and regional publications. Any divergence between any IEC Publication and the corresponding national or regional publication shall be clearly indicated in the latter.
5) IEC itself does not provide any attestation of conformity. Independent certification bodies provide conformity assessment services and, in some areas, access to IEC marks of conformity. IEC is not responsible for any services carried out by independent certification bodies.
6) All users should ensure that they have the latest edition of this publication.
7) No liability shall attach to IEC or its directors, employees, servants or agents including individual experts and members of its technical committees and IEC National Committees for any personal injury, property damage or other damage of any nature whatsoever, whether direct or indirect, or for costs (including legal fees) and expenses arising out of the publication, use of, or reliance upon, this IEC Publication or any other IEC Publications.
8) Attention is drawn to the Normative references cited in this publication. Use of the referenced publications is indispensable for the correct application of this publication.
9) IEC draws attention to the possibility that the implementation of this document may involve the use of (a) patent(s). IEC takes no position concerning the evidence, validity or applicability of any claimed patent rights in respect thereof. As of the date of publication of this document, IEC had not received notice of (a) patent(s), which may be required to implement this document. However, implementers are cautioned that this may not represent the latest information, which may be obtained from the patent database available at https://patents.iec.ch . IEC shall not be held responsible for identifying any or all such patent rights.

IEC 60794-1-111 has been prepared by subcommittee 86A: Fibres and cables, of IEC technical committee 86: Fibre optics. It is an International Standard.

This document partially cancels and replaces IEC 60794-1-21:2015. This edition constitutes a technical revision.

This edition includes the following significant technical changes with respect to IEC 60794-1-21:2015:

a) the nominal sample length was newly specified as 10 m between the cable element fixing points at both ends, unless otherwise specified;
b) the number of turns on the mandrel in Figure 1 for the single-helix configuration were corrected to match the number of turns shown in the figure for the two-helix configuration;

AVA Documents Document Sharing Hub

c) requirements on the turnaround loop were added for method E11A, two-helix configuration;

d) the turnaround loop with the same diameter as the mandrel was taken into account for calculation of the number of turns of each helix for method E11A, two-helix configuration;

e) added a formula for calculation of the number of revolutions in each helix for method E11A, two-helix configuration;

f) added a description for the procedure when the turnaround loop diameter is larger than the mandrel diameter for method E11A, two-helix configuration;

g) all the figures were updated and the different components labelled;

h) added the attenuation monitoring equipment in 4.2 for the apparatus and the description to measure the change in attenuation in the test methods E11A and E11B;

i) added Clause 9 for details to be reported;

j) added Annex A showing an example of a special mandrel to perform the bend test according to method E11A, two-helix configuration;

k) added Annex B providing the rationale for the options of method E11A, two-helix configuration.

The text of this International Standard is based on the following documents:

Draft	Report on voting
86A/2367/FDIS	86A/2373/RVD

Full information on the voting for its approval can be found in the report on voting indicated in the above table.

The language used for the development of this International Standard is English.

This document was drafted in accordance with ISO/IEC Directives, Part 2, and developed in accordance with ISO/IEC Directives, Part 1 and ISO/IEC Directives, IEC Supplement, available at www.iec.ch/members_experts/refdocs. The main document types developed by IEC are described in greater detail at www.iec.ch/standardsdev/publications.

A list of all parts in the IEC 60794 series, published under the general title *Optical fibre cables*, can be found on the IEC website.

The committee has decided that the contents of this document will remain unchanged until the stability date indicated on the IEC website under webstore.iec.ch in the data related to the specific document. At this date, the document will be

- reconfirmed,
- withdrawn, or
- revised.

IMPORTANT – The "colour inside" logo on the cover page of this document indicates that it contains colours which are considered to be useful for the correct understanding of its contents. Users should therefore print this document using a colour printer.

Documents
Document Sharing Hub

Full document details: IEC 60794-1-111-2023

INTRODUCTION

This document cancels and replaces method E11 of IEC 60794-1-21:2015, which will be withdrawn. It includes an editorial revision, based on the new structure and numbering system for optical fibre cable test methods. Additionally, technical changes were implemented. The mechanical tests contained in IEC 60794-1-21:2015 will be individually numbered in the IEC 60794-1-1xx series. Each test method is now considered to be an individual document rather than part of a multi-test method compendium. Full cross-reference details are given in IEC 60794-1-2.

The descriptions and the figures of the test methods in this document have been considerably changed to improve the procedures, avoid different interpretations and add useful information such as examples and rationale. However, the intention and procedures of the test methods were not changed.

Documents
Document Sharing Hub

Full document details: IEC 60794-1-111-2023

OPTICAL FIBRE CABLES –

Part 1-111: Generic specification – Basic optical cable test procedures – Mechanical test methods – Bend, method E11

1 Scope

This part of IEC 60794 defines the test procedure to determine the ability of an optical fibre cable to withstand bending around a test mandrel. The primary purpose of this procedure is to measure the change in attenuation when the cable is bent around a test mandrel. A secondary purpose is to assess whether the cable has been physically damaged by bending.

NOTE 1 This test can be utilized at any specified temperature, including the low or high temperature limits for the cable.

NOTE 2 The bend test procedure for cable elements is specified in IEC 60794-1-301, method G1.

2 Normative references

The following documents are referred to in the text in such a way that some or all of their content constitutes requirements of this document. For dated references, only the edition cited applies. For undated references, the latest edition of the referenced document (including any amendments) applies.

IEC 60793-1-46, *Optical fibres – Part 1-46: Measurement methods and test procedures – Monitoring of changes in optical transmittance*

IEC 60794-1-1, *Optical fibre cables – Part 1-1: Generic specification – General*

IEC 60794-1-2, *Optical fibre cables – Part 1-2: Generic specification – Basic optical cable test procedures – General guidance*

3 Terms and definitions

For the purposes of this document, the terms and definitions given in IEC 60794-1-1 apply.

ISO and IEC maintain terminological databases for use in standardization at the following addresses:

- IEC Electropedia: available at http://www.electropedia.org/
- ISO Online browsing platform: available at http://www.iso.org/obp

4 General

4.1 Sample

The nominal sample length shall be 10 m and the fibres, buffers, sheath(s) and any strength members shall be clamped, glued or otherwise fixed together at each end so that they do not move during the bend test, unless otherwise specified in the relevant specification. The actual sample length should be longer than the nominal sample length to allow for connection to the optical monitoring equipment. The section in the middle of the nominal sample length shall be bent.

AVA Documents Document Sharing Hub

Full document details: IEC 60794-1-111-2023

4.2 Apparatus

A single mandrel shall enable the sample to be wrapped tangentially in a close helix around a mandrel (see Figure 1, Figure 2 and Figure 3).

If optical monitoring is required, an optical monitoring equipment according to IEC 60793-1-46 shall be used.

4.3 Test methods

As indicated in the relevant specification, one of the methods described in Clause 5 or Clause 6 shall be used.

4.4 Test conditions

The tests shall be carried out at the temperature specified in the relevant detail specification. If no temperature is specified, the ambient temperature shall be within the standard atmospheric conditions as specified in IEC 60794-1-2.

5 Method E11A – Bend as helix

5.1 General

The intent of method E11A is to specify the test with the total number of turns on a mandrel of a specified diameter.

Either test set-up, single-helix or two-helix configuration, may be used for testing according to method E11A.

Documents
Document Sharing Hub

Full document details: IEC 60794-1-111-2023

5.2 Single-helix configuration

The test set-up with one helix as shown in Figure 1 may be used.

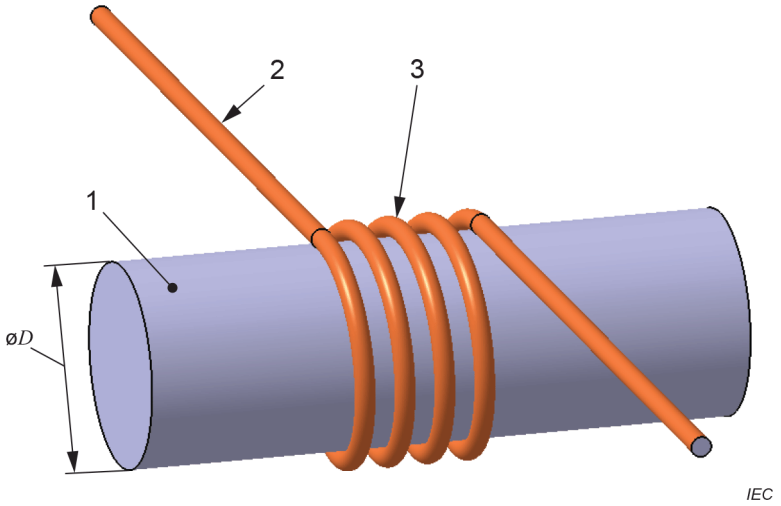

Key

1 mandrel

2 sample

3 wrapped sample in a single helix

D mandrel diameter

NOTE This figure illustrates 4 turns of the sample on the mandrel.

Figure 1 – Bend test set-up for method E11A: single-helix configuration

Torsion should be minimised but cannot be avoided with this configuration. If torsion should be avoided altogether, the two-helix configuration should be used.

Documents
Document Sharing Hub
Full document details: IEC 60794-1-111-2023

5.3 Two-helix configuration

The test set-up with two helixes as shown in Figure 2 may be used.

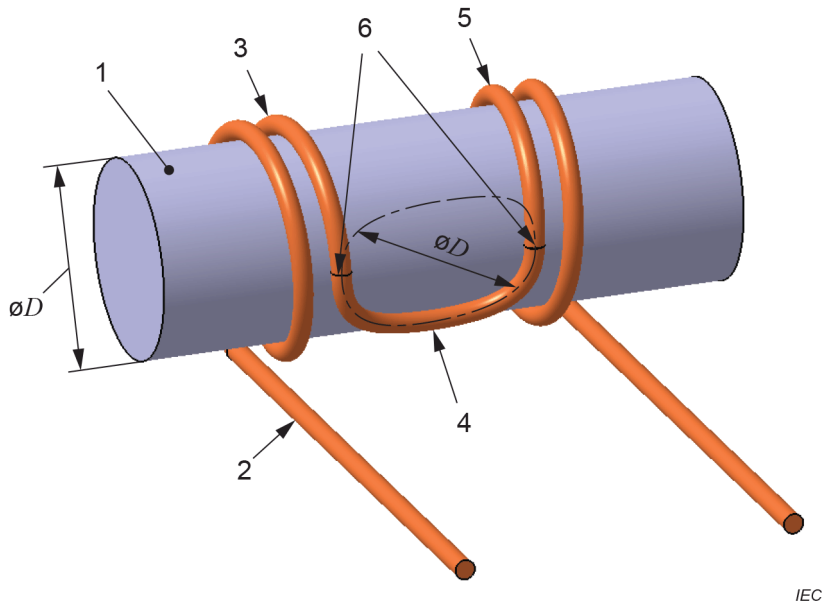

Key

1 mandrel

2 sample

3 helix with h revolutions on one side of the mandrel

4 turnaround loop (180° or 0,5 turns)

5 helix with h revolutions on the other side of the mandrel

6 transition point between helix and turnaround loop

D mandrel diameter and same size for turnaround loop diameter

NOTE 1 This figure illustrates 4 turns of the sample on the mandrel (0,5 turns in the turnaround loop and 1,75 turns in each helix).

NOTE 2 Annex A shows an advanced design of a special mandrel to perform the bend test.

Figure 2 – Bend test set-up for method E11A: two-helix configuration

The diameter of the turnaround loop shall be at least the diameter of the mandrel. If the diameter of the turnaround loop is equal to the diameter of the mandrel, the number of revolutions in each helix shall be calculated as given in Formula (1).

$$h = (n - p)/2 \tag{1}$$

where

h is the number of revolutions in each helix (without turnaround loop);

n is the specified number of turns;

p is the number of turns in the turnaround loop (0,5 turns).

EXAMPLE 1 If the number of turns (n) is specified with 4 and the number of turns in the turnaround loop with 0,5, the number of revolutions in each helix (h) results in 1,75.

EXAMPLE 2 If the number of turns (n) is specified with 6 and the number of turns in the turnaround loop with 0,5, the number of revolutions in each helix (h) results in 2,75.

AVA Documents Document Sharing Hub

If the turnaround loop diameter is larger than the mandrel diameter, the turnaround loop shall not be taken into account for the calculation of the number of revolutions in each helix as given in Formula (1). In this case, p shall be entered with the value 0 in Formula (1).

NOTE See Annex B for the rationale for the above options.

5.4 Procedure

The attenuation of the sample shall be measured in the unwrapped configuration before the start of the test. The fibres of the sample and optical monitoring equipment shall remain connected throughout the test.

The sample shall be wrapped around the mandrel at a uniform rate. Sufficient tension shall be applied to ensure that there is no gap between the mandrel and the outer surface of the sample. The number of turns and revolutions in each helix shall be applied correctly. The change in attenuation shall be measured in the wrapped configuration.

NOTE When using the single-helix configuration (Figure 1), torsion of the cable cannot be avoided.

The sample shall then be unwrapped. The change in attenuation shall be measured in the unwrapped configuration.

A cycle consists of one wrapping and one unwrapping of the sample on and from the mandrel.

The diameter of the test mandrel, the number of turns and the number of cycles shall be specified in the relevant specification.

The change in attenuation shall be calculated relative to the initial attenuation measured before the start of the test.

6 Method E11B – U bend

The attenuation of the sample shall be measured in the straight configuration before the start of the test.

The sample shall be bent around a mandrel through 180° and kept taut during the bending as shown in Figure 3 a).

A cycle consists of one U bend of 180° as shown in Figure 3 a) followed by a reverse U bend of 180° as shown in Figure 3 b), and a return to the straight position.

The two sample sections away from the mandrel (beyond A and B in Figure 3) have to be moved to achieve the 180° bend and 180° reverse bend. Ensure that the two sample sections have sufficiently large bending radii. These bending radii shall be significantly larger than that of the bent sample around the mandrel.

The diameter of the mandrel and the number of cycles shall be stated in the relevant specification. A minimum of one mandrel is required to perform the test but two mandrels having the same diameter may be used, as illustrated in Figure 3.

Documents
Document Sharing Hub
Full document details: IEC 60794-1-111-2023

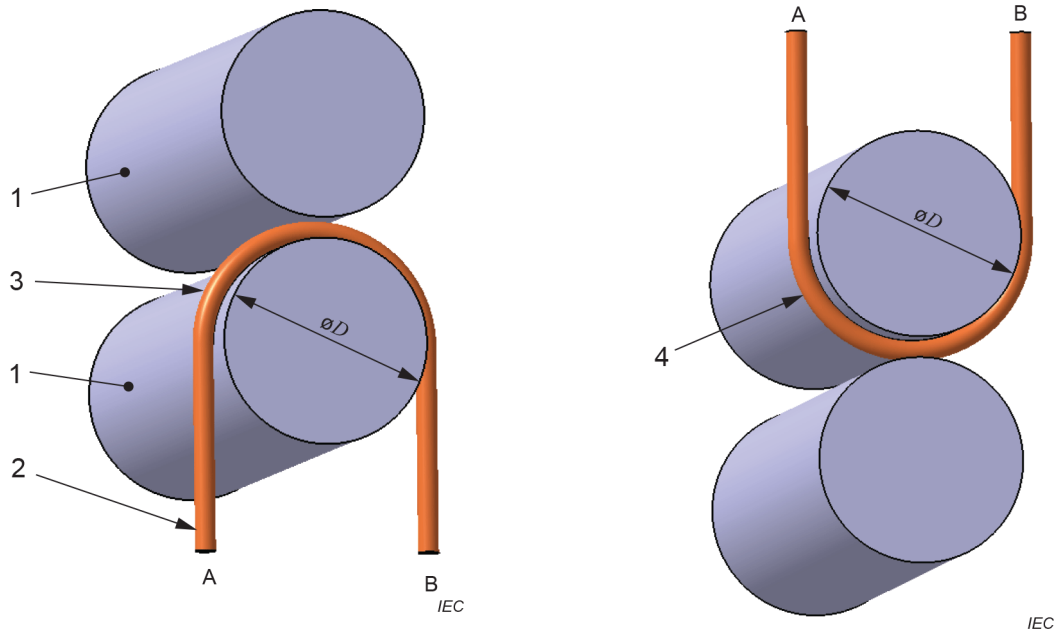

a) 180° bend **b) 180° reverse bend**

Key

1 mandrel

2 sample

3 180° bend of sample

4 180° reverse bend of sample

A sample section on one side

B sample section on the other side

D mandrel diameter

NOTE This figure uses two mandrels with the same diameter for better illustration.

Figure 3 – Bend test set-up for method E11B

The change in attenuation shall be measured in the bent and straight configuration during and in the straight configuration after test as required by the relevant specification. The change in attenuation shall be calculated relative to the initial attenuation before the start of the test.

7 Requirements

The acceptance criteria for the test shall be as stated in the relevant specification. The requirements include change in attenuation and physical damage to the cable.

8 Details to be specified

The relevant specification shall include the following:

a) method to be used (E11A or E11B);

b) mandrel diameter (or ratio of mandrel diameter to cable diameter);

c) number of turns (for method E11A);

d) number of cycles;

Documents
Document Sharing Hub
Full document details: IEC 60794-1-111-2023