IEC 60810

Edition 5.0 2017-09
REDLINE VERSION

INTERNATIONAL STANDARD

colour inside

Lamps, light sources and LED packages for road vehicles – Performance requirements

IEC 60810:2017-09 RLV(en)

AVA Documents
Document Sharing Hub

Full document details: IEC 60810 2017 RLV

THIS PUBLICATION IS COPYRIGHT PROTECTED

Copyright © 2017 IEC, Geneva, Switzerland

All rights reserved. Unless otherwise specified, no part of this publication may be reproduced or utilized in any form or by any means, electronic or mechanical, including photocopying and microfilm, without permission in writing from either IEC or IEC's member National Committee in the country of the requester. If you have any questions about IEC copyright or have an enquiry about obtaining additional rights to this publication, please contact the address below or your local IEC member National Committee for further information.

IEC Central Office
3, rue de Varembé
CH-1211 Geneva 20
Switzerland

Tel.: +41 22 919 02 11
Fax: +41 22 919 03 00
info@iec.ch
www.iec.ch

About the IEC
The International Electrotechnical Commission (IEC) is the leading global organization that prepares and publishes International Standards for all electrical, electronic and related technologies.

About IEC publications
The technical content of IEC publications is kept under constant review by the IEC. Please make sure that you have the latest edition, a corrigenda or an amendment might have been published.

IEC Catalogue - webstore.iec.ch/catalogue
The stand-alone application for consulting the entire bibliographical information on IEC International Standards, Technical Specifications, Technical Reports and other documents. Available for PC, Mac OS, Android Tablets and iPad.

IEC publications search - www.iec.ch/searchpub
The advanced search enables to find IEC publications by a variety of criteria (reference number, text, technical committee,…). It also gives information on projects, replaced and withdrawn publications.

IEC Just Published - webstore.iec.ch/justpublished
Stay up to date on all new IEC publications. Just Published details all new publications released. Available online and also once a month by email.

Electropedia - www.electropedia.org
The world's leading online dictionary of electronic and electrical terms containing 20 000 terms and definitions in English and French, with equivalent terms in 16 additional languages. Also known as the International Electrotechnical Vocabulary (IEV) online.

IEC Glossary - std.iec.ch/glossary
65 000 electrotechnical terminology entries in English and French extracted from the Terms and Definitions clause of IEC publications issued since 2002. Some entries have been collected from earlier publications of IEC TC 37, 77, 86 and CISPR.

IEC Customer Service Centre - webstore.iec.ch/csc
If you wish to give us your feedback on this publication or need further assistance, please contact the Customer Service Centre: csc@iec.ch.

AVA Documents
Document Sharing Hub

Full document details: IEC 60810 2017 RLV

IEC 60810

Edition 5.0 2017-09
REDLINE VERSION

INTERNATIONAL STANDARD

colour inside

Lamps, light sources and LED packages for road vehicles – Performance requirements

INTERNATIONAL
ELECTROTECHNICAL
COMMISSION

ICS 29.140.99

ISBN 978-2-8322-4855-3

Warning! Make sure that you obtained this publication from an authorized distributor.

® Registered trademark of the International Electrotechnical Commission

Documents
Document Sharing Hub

Full document details: IEC 60810 2017 RLV

CONTENTS

FOREWORD 8
1 Scope 10
2 Normative references 10
3 Terms and definitions 12
4 Requirements and test conditions for filament lamps 16
4.1 Basic function and interchangeability 16
4.2 Torsion strength 16
4.3 Characteristic life T_c 17
4.4 Life B_3 17
4.5 Luminous flux maintenance 17
4.6 Resistance to vibration and shock 17
4.7 Glass-bulb strength 18
5 Filament lamp data 18
6 Requirements and test conditions for discharge lamps 23
6.1 Basic function and interchangeability 23
6.2 Mechanical strength 23
6.2.1 Bulb-to-cap connection 23
6.2.2 Cable-to-cap connection (if any) 23
6.3 Characteristic life T_c 23
6.4 Life B_3 23
6.5 Luminous flux maintenance 23
6.6 Resistance to vibration and shock 23
6.7 Discharge lamps with integrated starting device 23
6.8 Discharge lamps with integrated starting device and integrated ballast 24
7 Requirements and test conditions for LED light sources 24
7.1 Basic function and interchangeability 24
7.2 UV radiation 25
7.3 Luminous flux and colour maintenance 25
7.4 Resistance to vibration and shock 27
7.5 Electromagnetic compatibility 28
7.6 Powered thermal cycling test 28
7.7 Mass 29
7.8 Typical circuits for LED light sources 29
7.8.1 General 29
7.8.2 Typical circuits for LR3, LR5, LY3, LY5, LW3 and LW5 LED light sources 29
7.8.3 Typical circuits for LR4 LED light sources 30
7.9 Maximum power consumption 31
7.10 Overvoltage test 31
7.11 Reverse voltage test 31
7.12 Transient voltage test (field decay) 32
7.13 Transient voltage test (load dump) 33
7.14 Electrostatic discharge test (ESD) 34
7.15 Pulsed operating life (PLT) test 34
8 Requirements and test conditions for LED packages 34
8.1 LED package stress test qualification 34

AVA Documents
Document Sharing Hub
Full document details: IEC 60810 2017 RLV

8.2 Test samples ... 35
8.2.1 Lot requirements ... 35
8.2.2 Production requirements ... 35
8.2.3 Pre- and post-stress test requirements ... 36
8.2.4 Assembly of LED packages on test boards ... 36
8.2.5 Moisture pre-conditioning (MP) ... 36
8.2.6 Thermal resistance (TR) test ... 36
8.3 Definition of failure criteria ... 36
8.4 Choice between test conditions ... 37
8.5 Criteria for passing qualification/requalification ... 37
8.6 Qualification test ~~definition~~ ... 37
8.6.1 Pre- and post- electrical and photometric test ... 37
8.6.2 Pre- and post- external visual (EV) test ... 37
8.6.3 High temperature operating life (HTOL) test ... 38
8.6.4 Temperature cycling (TMCL) test ... 38
8.6.5 Wet high temperature operating life (WHTOL) test ... 38
8.6.6 Power temperature cycling (PTMCL) test ... 39
8.6.7 Electrostatic discharge, human body model (ESD-HBM) test ... 39
8.6.8 Electrostatic discharge, machine model (ESD-MM) test ... 39
8.6.9 Destructive physical analysis (DPA) test ... 39
8.6.10 Physical dimensions (PD) test ... 39
8.6.11 Vibrations variable frequency (VVF) test ... 39
8.6.12 Mechanical shock (MS) test ... 40
8.6.13 Resistance to soldering heat (RSH-TTW) test ... 40
8.6.14 Resistance to soldering heat (RSH-reflow) test ... 40
8.6.15 Solderability (SO) test ... 40
8.6.16 Thermal shock (TMSK) test ... 40
8.6.17 Hydrogen sulphide (H_2S) test ... 41
8.6.18 Pulsed operating life (PLT) test ... 41
8.6.19 Dew (DEW) test ... 41
8.6.20 Flowing mixed gas corrosion (FMGC) test ... 42
8.6.22 Bond shear test (BS) ... 43
8.6.23 Die shear test (DS) ... 43
8.6.21 Wire bond pull test (WBP) ... 43
Annex A (normative) Life test conditions for filament lamps ... 44
A.1 Ageing ... 44
A.2 Test voltage ... 44
A.3 Operating position and operating conditions ... 44
A.4 Switching cycle ... 44
A.4.1 Single-filament lamps ... 44
A.4.2 Dual-filament lamps for headlamps ... 45
A.4.3 Dual-filament lamps for light signalling equipment ... 45
A.5 Luminous flux and colour maintenance ... 45
Annex B (normative) Vibration tests ... 46
B.1 General ... 46
B.2 Test conditions ... 47
B.2.1 General ... 47
B.2.2 Mounting (see IEC 60068-2-47) ... 47
B.2.3 Measuring points ... 47

AVA Documents
Document Sharing Hub
Full document details: IEC 60810 2017 RLV

B.2.4 Control point 47
B.2.5 Conditioning 47
B.2.6 Axis of vibration 47
B.2.7 WBR test – Basic motion 48
B.3 Test conditions 48
B.3.1 General 48
B.3.2 Narrowband random vibration tests 48
B.3.3 Wideband random vibration tests 49
Annex C (normative) Glass-bulb strength test 51
C.1 General 51
C.2 Test equipment and procedure 51
C.2.1 Principle of the test equipment 51
C.2.2 Test conditions 51
C.2.3 Requirements for plates 52
C.3 Requirements 52
C.4 Evaluation 53
C.4.1 General 53
C.4.2 Assessment based on attributes 53
C.4.3 Assessment based on variables 53
Annex D (normative) Life and luminous flux maintenance test conditions for discharge lamps 55
D.1 Ageing 55
D.2 Test circuit and test voltage 55
D.3 Burning position and operating conditions 55
D.4 Switching cycle 55
D.5 Luminous flux maintenance 57
Annex E (normative) Bulb deflection test 58
E.1 General 58
E.2 Test set-up and procedure 58
E.3 Requirement 58
Annex F (informative) Guidance on equipment design 59
F.1 Pinch temperature limit 59
F.2 Solder temperature limit 59
F.3 Maximum filament lamp outline 59
F.4 Maximum surge voltage 59
F.5 Recommended instructions for use and handling of halogen filament lamps 59
F.6 Recommended instructions for use and handling of discharge lamps 60
Annex G (informative) ~~Information for~~ Ballast design 65
Annex H (informative) Symbols 66
H.1 General 66
H.2 Symbol indicating that lamps operate at high temperatures 67
H.3 Symbol indicating that care should be taken to avoid touching the bulb 67
H.4 Symbol indicating that the use of protective gloves is advised 67
H.5 Symbol indicating that lamps with scratched or otherwise damaged bulbs should not be used 67
H.6 Symbol indicating that before handling, the lamp shall be switched off 67
H.7 Symbol indicating that the use of eye protection is advised 67
H.8 Symbol indicating that during operation, the lamp emits UV-radiation 68

AVA Documents
Document Sharing Hub
Full document details: IEC 60810 2017 RLV

H.9 Symbol indicating that the lamp shall be operated only in a luminaire with a protective shield ... 68
H.10 Symbol indicating dangerous voltage ... 69
H.11 Pictogram for instruction "Non-ECE" ... 69
H.12 Pictogram for instruction "Interior lighting only" ... 70
Annex I (normative) Luminous flux maintenance test conditions for LED light sources ... 71
I.1 Ageing ... 71
I.2 Test voltage ... 71
I.3 Operating conditions ... 71
I.3.1 Test rack ... 71
I.3.2 LED light sources with integrated thermal management ... 71
I.3.3 LED light sources with external thermal management ... 71
I.4 Switching cycle ... 72
I.4.1 Single-function LED light sources ... 72
I.4.2 Dual-function LED light sources for headlamps ... 72
I.4.3 Multiple-function LED light sources for light signalling equipment ... 72
I.5 Luminous flux maintenance measurements ... 73
I.6 Colour measurement ... 73
Annex J (normative) Destructive physical analysis for LED packages ... 74
J.1 Description ... 74
J.2 Equipment ... 74
J.3 Procedure ... 74
J.4 Failure criteria ... 74
Annex K (informative) Communication sheet LED package testing ... 75
Annex L (normative) Re-testing matrix for LED packages testing ... 78
Annex M (informative) Guidelines for LED packages robustness validation ... 79
M.1 General ... 79
M.2 Test samples ... 81
M.2.1 Lot requirements ... 81
M.2.2 Production requirements ... 82
M.2.3 Pre- and post-stress test requirements ... 82
M.2.4 Assembly of LED packages on test boards ... 82
M.3 Definition of end-of-test criteria ... 82
M.4 Test sequence of over-stress testing ... 82
M.5 Over-stress test definition ... 83
M.5.1 Pre- and post-electrical and photometric test ... 83
M.5.2 Pre- and post-external visual (EV) test ... 83
M.5.3 High temperature operating life (HTOL) and low temperature operating life (LTOL) tests ... 83
M.5.4 Temperature cycling (TMCL) test ... 84
M.5.5 Wet high temperature operating life (WHTOL) test ... 84
M.5.6 Power temperature cycling (PTMCL) test ... 85
M.5.7 Thermal shock (TMSK) test ... 85
M.6 Destructive physical analysis (DPA) test ... 86
M.7 Projection models ... 86
Bibliography ... 90

Figure 1 – Examples of LED packages ... 14

AVA Documents
Document Sharing Hub
Full document details: IEC 60810 2017 RLV

Figure 2 – Example of an LED module without integrated heatsink 14
Figure 3 – Example of an LED module with integrated heatsink 15
Figure 4 – Example of a replaceable LED light source 15
Figure 5 – Example of a non-replaceable LED light source 16
Figure 6 – Position of the centre of gravity (shaded areas) 24
Figure 7 – Extract from IEC 60068-2-14 Test Nb, showing the temperature cycle profile 28
Figure 8 – Typical electrical circuit for an LR3, LR5, LY3, LY5, LW3 and LW5 LED light source 30
Figure 9 – Typical electrical circuit for an LR4 LED light source 30
Figure 10 – Profile of pulse 1 from ISO 7637-2 32
Figure 11 – Profile of pulse 2a from ISO 7637-2 33
Figure 12 – Temperature–humidity characteristics for the DEW test 42
Figure B.1 – Recommended equipment layout for vibration testing 50
Figure C.1 – Diagrammatic sketch of the principle of the test equipment 51
Figure D.1 – Superposition of on/off switching and power switching cycle 56
Figure E.1 – Sketch of the test set-up 58
Figure F.1 – Voltage surges for 12 V filament lamps – Maximum tolerable duration for a voltage surge as a function of its height 60
Figure F.2 – Maximum filament lamp outlines H1 61
Figure F.3 – Maximum filament lamp outlines H2 62
Figure F.4 – Maximum filament lamp outlines H3 63
Figure F.5 – Maximum filament lamp outlines P21W, PY21W, P21/4W and P21/5W 64
Figure H.1 – Pictogram for instruction "Non-ECE" 69
Figure H.2 – Pictogram for instruction "Interior lighting only" 70
Figure M.1 – Concept of over-stress testing for two stress parameters 80
Figure M.2 – Flow diagram for the robustness validation process 81

Table 1 – Conditions of compliance for life B_3 17
Table 2 – Conditions of compliance for the vibration test 17
Table 3 – Rated life values for continuous operation 19
Table 4 – Rated luminous flux-maintenance values for continuous operation 22
Table 5 – Minimum $L_{70}B_{10}$ values for ~~standardised~~ replaceable LED light sources 26
Table 6 – Typical “on”-times for the different functions per 100 000 km drive distance, based on an average speed of 33,6 km/h [a] 27
Table 7 – Example of product data 27
Table 8 – Temperature classes for the powered thermal cycling test 28
Table 9 – Maximum mass for LED light sources 29
Table 10 – Maximum power consumption 31
Table 11 – Test parameters for pulse 1 from ISO 7637-2 32
Table 12 – Test parameters for pulse 2a from ISO 7637-2 33
Table B.1 – Vibration test on motor vehicle lamps – Test conditions 48
Table B.2 – Vibration test on motor vehicle lamps – Standard test conditions (narrowband) 48
Table B.3 – Vibration test on motor vehicle lamps – Heavy-duty test conditions 49

AVA Documents
Document Sharing Hub
Full document details: IEC 60810 2017 RLV

Table B.4 – Vibration test on motor vehicle lamps – Standard test conditions(wideband) (wideband) 49
Table C.1 – Compression strength 52
Table C.2 – Inspection by attributes – Double sampling plan 53
Table C.3 – Inspection by variables – "S" method of assessment 54
Table D.1 – On/off switching cycle 55
Table D.2 – Power switching cycle 56
Table D.3 – Fast power switching cycle 57
Table G.1 – Open circuit voltage 65
Table I.1 – Examples of possible product data 72
~~Table L.1 – Retesting matrix ....~~
Table M.1 – Typical over-stress matrix for two stress parameters 83
Table M.2 – Acceleration models 87

Documents
Document Sharing Hub
Full document details: IEC 60810 2017 RLV

INTERNATIONAL ELECTROTECHNICAL COMMISSION

LAMPS, LIGHT SOURCES AND LED PACKAGES FOR ROAD VEHICLES – PERFORMANCE REQUIREMENTS

FOREWORD

1) The International Electrotechnical Commission (IEC) is a worldwide organization for standardization comprising all national electrotechnical committees (IEC National Committees). The object of IEC is to promote international co-operation on all questions concerning standardization in the electrical and electronic fields. To this end and in addition to other activities, IEC publishes International Standards, Technical Specifications, Technical Reports, Publicly Available Specifications (PAS) and Guides (hereafter referred to as "IEC Publication(s)"). Their preparation is entrusted to technical committees; any IEC National Committee interested in the subject dealt with may participate in this preparatory work. International, governmental and non-governmental organizations liaising with the IEC also participate in this preparation. IEC collaborates closely with the International Organization for Standardization (ISO) in accordance with conditions determined by agreement between the two organizations.
2) The formal decisions or agreements of IEC on technical matters express, as nearly as possible, an international consensus of opinion on the relevant subjects since each technical committee has representation from all interested IEC National Committees.
3) IEC Publications have the form of recommendations for international use and are accepted by IEC National Committees in that sense. While all reasonable efforts are made to ensure that the technical content of IEC Publications is accurate, IEC cannot be held responsible for the way in which they are used or for any misinterpretation by any end user.
4) In order to promote international uniformity, IEC National Committees undertake to apply IEC Publications transparently to the maximum extent possible in their national and regional publications. Any divergence between any IEC Publication and the corresponding national or regional publication shall be clearly indicated in the latter.
5) IEC itself does not provide any attestation of conformity. Independent certification bodies provide conformity assessment services and, in some areas, access to IEC marks of conformity. IEC is not responsible for any services carried out by independent certification bodies.
6) All users should ensure that they have the latest edition of this publication.
7) No liability shall attach to IEC or its directors, employees, servants or agents including individual experts and members of its technical committees and IEC National Committees for any personal injury, property damage or other damage of any nature whatsoever, whether direct or indirect, or for costs (including legal fees) and expenses arising out of the publication, use of, or reliance upon, this IEC Publication or any other IEC Publications.
8) Attention is drawn to the Normative references cited in this publication. Use of the referenced publications is indispensable for the correct application of this publication.
9) Attention is drawn to the possibility that some of the elements of this IEC Publication may be the subject of patent rights. IEC shall not be held responsible for identifying any or all such patent rights.

This redline version of the official IEC Standard allows the user to identify the changes made to the previous edition. A vertical bar appears in the margin wherever a change has been made. Additions are in green text, deletions are in strikethrough red text.

Documents
Document Sharing Hub

Full document details: IEC 60810 2017 RLV

International Standard IEC 60810 has been prepared by subcommittee 34A: Lamps, of IEC technical committee 34: Lamps and related equipment.

This fifth edition cancels and replaces the fourth edition published in 2014 and Amendment 1:2017. This edition constitutes a technical revision.

This edition includes the following significant technical changes with respect to the previous edition:

a) update and clarification of the title and scope;

b) introduction of new LED light sources;

c) introduction of requirements for LED light sources;

d) introduction of guidelines on LED package robustness validation for LED packages.

The text of this International Standard is based on the following documents:

FDIS	Report on voting
34A/2021/FDIS	34A/2033/RVD

Full information on the voting for the approval of this International Standard can be found in the report on voting indicated in the above table.

This document has been drafted in accordance with the ISO/IEC Directives, Part 2.

The committee has decided that the contents of this document will remain unchanged until the stability date indicated on the IEC website under "http://webstore.iec.ch" in the data related to the specific document. At this date, the document will be

- reconfirmed,
- withdrawn,
- replaced by a revised edition, or
- amended.

IMPORTANT – The 'colour inside' logo on the cover page of this publication indicates that it contains colours which are considered to be useful for the correct understanding of its contents. Users should therefore print this document using a colour printer.

Documents
Document Sharing Hub

Full document details: IEC 60810 2017 RLV

LAMPS, LIGHT SOURCES AND LED PACKAGES FOR ROAD VEHICLES – PERFORMANCE REQUIREMENTS

1 Scope

This document is applicable to ~~lamps (~~filament lamps, discharge lamps, LED light sources~~)~~ and LED packages to be used in road vehicles, i.e. in headlamps, fog-lamps, signalling lamps and interior lighting. It is especially applicable to those lamps and light sources which are listed in IEC 60809. ~~However, the standard may also be used for other lamps falling under the scope of this standard.~~

It specifies requirements and test methods for the measurement of performance characteristics such as lamp life, luminous flux maintenance, torsion strength, glass bulb strength and resistance to vibration and shock. Moreover, information on temperature limits, maximum lamp outlines and maximum tolerable voltage surges is given as guidance for lighting and electrical equipment design.

For some of the requirements given in this document, reference is made to data given in tables. For lamps not listed in such tables, the relevant data are supplied by the lamp manufacturer or responsible vendor.

The performance requirements are additional to the basic requirements specified in IEC 60809. They are, however, not intended to be used by authorities for legal type-approval purposes.

NOTE 1 In the various vocabularies and standards, different terms are used for "incandescent lamp" (IEC 60050-845:1987, 845-07-04) and "discharge lamp" (IEC 60050-845:1987, 845-07-17). In this document, "filament lamp" and "discharge lamp" are used. However, where only “lamp” is written both types are meant, unless the context clearly shows that it applies to one type only.

NOTE 2 This document does not apply to luminaires.

NOTE 3 In this document, the term LED light source is used, in other standards the term LED lamps can be used to describe similar products.

2 Normative references

The following documents are referred to in the text in such a way that some or all of their content constitutes requirements of this document. For dated references, only the edition cited applies. For undated references, the latest edition of the referenced document (including any amendments) applies.

~~IEC 60050 (all parts), *International Electrotechnical Vocabulary* (available at <http://www.electropedia.org/)~~

IEC 60050-845, *International Electrotechnical Vocabulary – Part 845: Lighting* (available at http://www.electropedia.org)

IEC 60061-1, *Lamp caps and holders together with gauges for the control of interchangeability and safety – Part 1: Lamp caps*

~~IEC 60068-2-6:1995, *Environmental testing – Part 2-6: Tests – Test Fc: Vibration (sinusoidal)*~~

IEC 60068-2-14, *Environmental testing – Part 2–14: Tests – Test N: Change of temperature*

AVA Documents Document Sharing Hub

Full document details: IEC 60810 2017 RLV

IEC 60068-2-43, *Environmental testing – Part 2-43: Tests – Test Kd: Hydrogen sulphide test for contacts and connections*

IEC 60068-2-58, *Environmental testing – Part 2-58: Tests – Test Td: Test methods for solderability, resistance to dissolution of metallization and to soldering heat of surface mounting devices (SMD)*

IEC 60068-2-60, *Environmental testing – Part 2-60: Tests – Test Ke: Flowing mixed gas corrosion test*

~~IEC 60410:1973, *Sampling plans and procedures for inspection by attributes*~~

IEC 60809:2014, *Lamps for road vehicles – Dimensional, electrical and luminous requirements*

CISPR 25, *Vehicles, boats and internal combustion engines – Radio disturbance characteristics – Limits and methods of measurement for the protection of on-board receivers*

ISO 7637-2:2011, *Road vehicles – Electrical disturbances from conduction and coupling – Part 2: Electrical transient conduction along supply lines only*

ISO 10605, *Road vehicles – Test methods for electrical disturbances from electrostatic discharge*

United Nations Vehicle Regulations – 1958 Agreement, *Agreement concerning the adoption of uniform technical prescriptions for wheeled vehicles, equipment and parts which can be fitted and/or be used on wheeled vehicles and the conditions for reciprocal recognition of approvals granted on the basis of these prescriptions*
(available at www.unece.org/trans/main/wp29/wp29regs.html)[1]

Addendum 36: Regulation No. 37, *Uniform provisions concerning the approval of filament lamps for use in approved lamp units of power-driven vehicles and of their trailers*

~~Addendum 37: Regulation No. 38, *Uniform provisions concerning the approval of rear fog lamps for power-driven vehicles and their trailers*~~

Addendum 47: Regulation No 48, *Uniform provisions concerning the approval of vehicles with regard to the installation of lighting and light-signalling devices*

Addendum 100: Regulation No. 101, *Uniform provisions concerning the approval of passenger cars powered by an internal combustion engine only, or powered by a hybrid electric power train with regard to the measurement of the emission of carbon dioxide and fuel consumption and/or the measurement of electric energy consumption and electric range, and of categories M1 and N1 vehicles powered by an electric power train only with regard to the measurement of electric energy consumption and electric range*

Addendum 122: Regulation No. 123, *Uniform provisions concerning the approval of adaptive front-lighting systems (AFS) for motor vehicles*

Addendum 127: Regulation No. 128, *Uniform provisions concerning the approval of light emitting diode (LED) light sources for use in approved lamp units on power-driven*

~~JESD22-A100D, *Cycled temperature humidity bias life test*~~

JESD22-A101C, *Steady-state temperature humidity bias life test*

~~JESD22-A104D~~ JESD22-A104E, *Temperature cycling*

---

[1] Also known as The 1958 Agreement. In the text of this document the regulations under this agreement are referred to as, for example, UN Regulation 37 or R37.

AVA Documents
Document Sharing Hub

Full document details: IEC 60810 2017 RLV

JESD22-A105C, *Power and temperature cycling*

JESD22-A106B, *Thermal shock*

JESD22-A108D, *Temperature, bias, and operating life*

JESD22-A113F, *Preconditioning of plastic surface mount devices prior to reliability testing*

JESD22-A115C, *Electrostatic discharge (ESD) sensitivity testing machine model (MM)*

JESD22-B101B, *External visual*

JESD22-B103B, *Vibration, variable frequency*

JESD22-B110B, *Mechanical shock*

JESD22-B106D, *Resistance to solder shock for through-hole mounted devices*

JESD22-B116:1998, *Wire Bond Shear Test Method*

JESD51-50:2012-04, *Overview of methodologies for the thermal measurement of single- and multi-chip, single- and multi-pnjunction light-emitting diodes (LEDs)*

JESD51-51:2012-04, *Implementation of the electrical test method for the measurement of real thermal resistance and impedance of light-emitting diodes with exposed cooling surface*

JESD51-52:2012-04, *Guidelines for combining CIE 127-2007 total flux measurements with thermal measurements of leds with exposed cooling surface*

JESD51-53:2012-05, *Terms, definitions and units glossary for LED thermal testing*

ANSI/IPC/ECA J-STD-002C, *Solderability tests for component leads, terminations, lugs, terminals and wires*

ANSI/ESDA/JEDEC JS-001-2012, *Joint JEDEC/ESDA standard for electrostatic discharge sensitivity testing human body model (HBM) – component level*

MIL-STD-883E:2015, *Visual Inspection Criteria*

ZVEI "*Guideline for Customer Notifications of Product and/or Process Changes (PCN) of Electronic Components specified for Automotive Applications*" 4th revised Edition, October 2016, Rev. 3

3 Terms and definitions

For the purposes of this document, the terms and definitions given in IEC 60050-845 and IEC 60809, and the following apply.

ISO and IEC maintain terminological databases for use in standardization at the following addresses:

- IEC Electropedia: available at http://www.electropedia.org/
- ISO Online browsing platform: available at http://www.iso.org/obp

Documents
Document Sharing Hub

Full document details: IEC 60810 2017 RLV

3.1
life
total time (expressed in hours) during which a lamp has been operated before it becomes useless

Note 1 to entry: For filament lamps, it is considered to be so according to one of the following criteria:

a) the end of life is the time when the filament fails;

b) the life of a dual-filament lamp is the time until either filament fails, if the lamp is tested in a switching cycle involving alternative operation of both filaments.

3.2
characteristic life
T
T_c
constant of the Weibull distribution indicating the time up to which 63,2 % of a number of tested lamps of the same type have ended their individual lives

3.3
life B_3
constant of the Weibull distribution indicating the time during which 3 % of a number of the tested lamps of the same type have reached the end of their individual lives

3.4
luminous flux maintenance
ratio of the luminous flux of a lamp at a given time in its life to its initial luminous flux, the lamp being operated under specific conditions

EXAMPLE 1 L_{70} is the time in hours to 70 % luminous flux maintenance.

EXAMPLE 2 L_{50} is the time in hours to 50 % luminous flux maintenance.

3.5
initial luminous flux
luminous flux of a lamp measured after ~~the ageing specified in Annex C of IEC 60809:2014, for filament lamps or in Annex D of this standard for discharge lamps or in Annex I of this standard for LED light sources~~ specified ageing

Note 1 to entry: The ageing is specified in Annex C of IEC 60809:2014 for filament lamps or in Annex D of this document for discharge lamps or in Annex I of this document for LED light sources.

3.6
rated value
value of a characteristic specified for operation of a lamp at test voltage and/or other specified conditions

3.7
pinch temperature limit
maximum admissible pinch temperature to ensure satisfactory lamp performance in service

3.8
solder temperature limit
maximum admissible solder temperature to ensure satisfactory lamp performance in service

3.9
maximum lamp outline
contour limiting the space to be reserved for the lamp in the relevant equipment

Documents
Document Sharing Hub
Full document details: IEC 60810 2017 RLV

3.10
heavy-duty lamp
lamp which shall comply with the heavy-duty test conditions specified in Table B.2 of IEC 60810 in addition to the requirements specified in IEC 60809

Note 1 to entry: A lamp is declared as heavy-duty by the manufacturer or responsible vendor.

3.11
life B_{10}
constant of the Weibull distribution indicating the time during which 10 % of a number of the tested lamps of the same type have reached the end of their individual lives

3.12
LED package
solid state device embodying a p-n junction, emitting optical radiation when excited by an electric current

Note 1 to entry: Examples are shown in Figure 1.

Note 2 to entry: In UN terminology the term "LED" is used with the same definition.

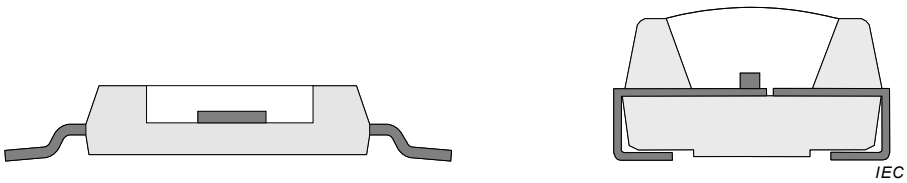

Figure 1 – Examples of LED packages

3.13
LED light source
light source where the visible radiation is emitted from one or more LED(s)

Note 1 to entry: An LED light source may or may not require an additional electronic controlgear and may or may not require additional provisions for thermal management.

3.13.1
LED module
LED light source which can only be replaced with the use of mechanical tools

Note 1 to entry: LED modules are generally considered as components for use in trades, professions or industries and are generally not intended for sale to the general public.

Note 2 to entry: Examples are shown in Figures 2 and 3.

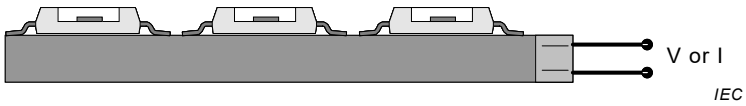

Figure 2 – Example of an LED module without integrated heatsink

Documents
Document Sharing Hub
Full document details: IEC 60810 2017 RLV

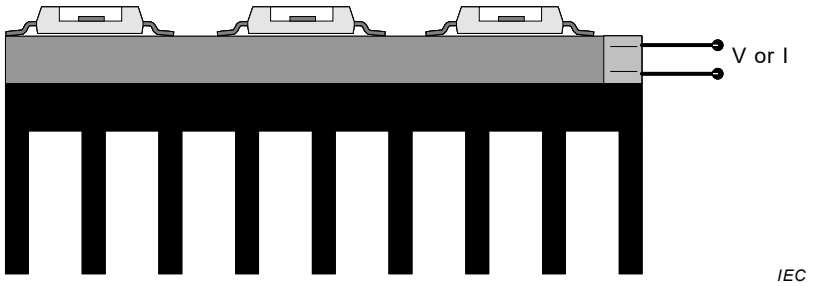

Figure 3 – Example of an LED module with integrated heatsink

3.13.2
replaceable LED light source
LED light source which can be easily replaced without the use of special tools

Note 1 to entry: Replaceable LED light sources are usually intended for sale to the general public as a replacement part.

Note 2 to entry: An example is shown in Figure 4.

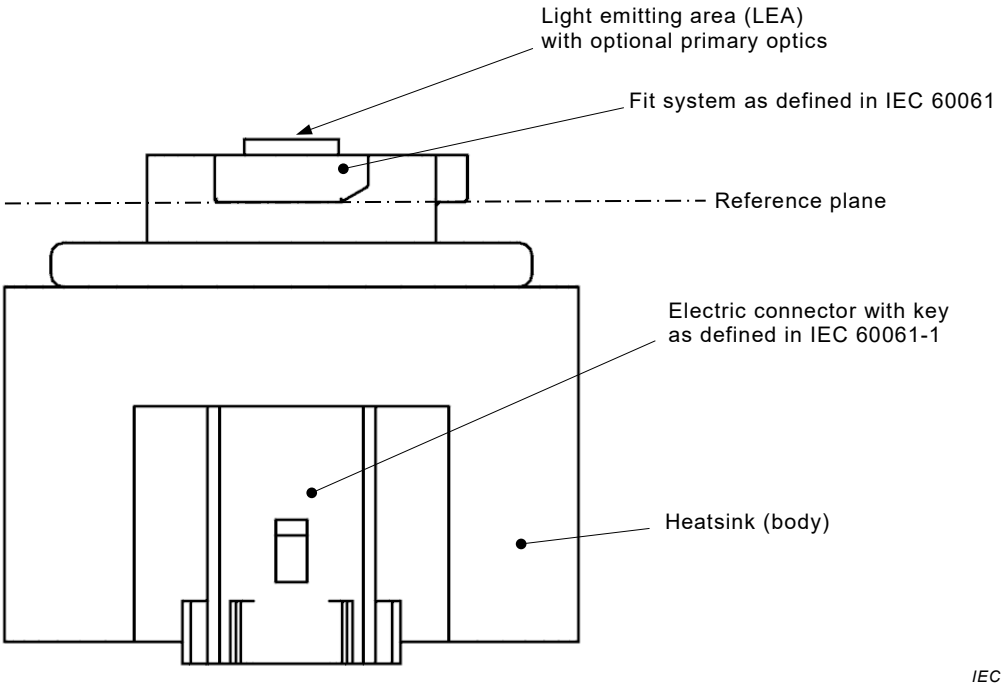

Figure 4 – Example of a replaceable LED light source

3.13.3
non-replaceable LED light source
LED light source which cannot be removed from the device or luminaire

Note 1 to entry: Non-replaceable LED light sources are usually intended as components for integration into the luminaire or device by manufacturers. They are designed and intended to be indivisible parts of a lighting or light signalling device, or of parts or modules or units of such devices.

Note 2 to entry: An example is shown in Figure 5.

Documents
Document Sharing Hub
Full document details: IEC 60810 2017 RLV

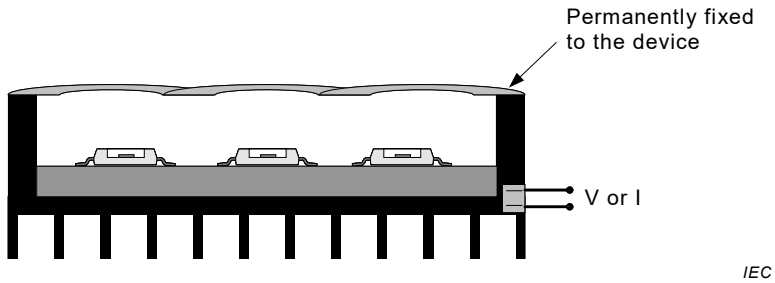

Figure 5 – Example of a non-replaceable LED light source

3.14
T_p ~~**of a LED light source**~~
temperature at a specified location on the surface of the LED light source (T_p-point) that can be measured during operation of the light source and that can be correlated to the temperature of the p-n junction of the LED

Note 1 to entry: The T_p point is generally specified by the manufacturer of the LED light source or by its datasheet.

3.15
electronic light source controlgear
one or more component(s) between supply and light source to control voltage and/or electrical current of the light source

3.16
case temperature
T_s
temperature of the thermocouple attachment point on the LED package as defined by the manufacturer of the package

4 Requirements and test conditions for filament lamps

4.1 Basic function and interchangeability

Filament lamps shall comply with IEC 60809.

4.2 Torsion strength

The cap shall be strong and firmly secured to the bulb.

Compliance is checked before and after the life test by submitting the filament lamp to the following torque values:

- filament lamps with bayonet caps
  - with 9 mm shell diameter: 0,3 Nm;
  - with 15 mm shell diameter: 1,5 Nm;
  - with 20 mm shell diameter: 3,0 Nm;
- filament lamps with screw caps
  - with 10 mm shell diameter: 0,8 Nm.

NOTE The torque values given above are all under consideration.

The torque shall not be applied suddenly but shall be increased progressively from 0 to the specified amount.

Documents
Document Sharing Hub
Full document details: IEC 60810 2017 RLV

Values are based on a non-compliance level of 1 %.

4.3 Characteristic life ~~T~~ T_c

The life ~~T~~ T_c measured on a test quantity of at least 20 filament lamps shall be at least 96 % of the rated value, given in Table 3.

Compliance is checked by life tests as ~~prescribed~~ specified in Annex A.

4.4 Life B_3

The life B_3 shall not be less than the rated value given in Table 3.

Compliance is checked by life tests as ~~prescribed~~ specified in Annex A.

The number of filament lamps failing before the required time shall not exceed the values in Table 1.

Table 1 – Conditions of compliance for life B_3

Number of filament lamps tested	Acceptance number
23 to 35	2
36 to 48	3
49 to 60	4
61 to 74	5
75 to 92	6

4.5 Luminous flux maintenance

The luminous flux maintenance shall be not less than the rated value given in Table 4. This value is based on a non-compliance level of 10 %.

4.6 Resistance to vibration and shock

In the event of service life being influenced by vibration or shock, the test methods and schedules detailed in Annex B shall be used to assess the performance.

The filament lamps are deemed to have satisfactorily completed the wideband or narrowband random vibration test as described in Annex B, if they continue to function during and after the test.

The number of filament lamps failing one of the tests shall not exceed the values in Table 2 (values are based on an acceptance quality limit (AQL) of 4 %).

Table 2 – Conditions of compliance for the vibration test

Number of filament lamps tested	Acceptance number
14 to 20	2
21 to 32	3
33 to 41	4
42 to 50	5
51 to 65	6

Documents
Document Sharing Hub
Full document details: IEC 60810 2017 RLV

4.7 Glass-bulb strength

In the event of bulbs being impaired by mechanical handling for their assembly in equipment, the test methods and schedules defined in Annex C shall be used to assess the performance. The bulbs shall withstand the specified compression strength.

5 Filament lamp data

Rated life and luminous flux-maintenance values for road vehicle filament lamps are tested under the conditions ~~prescribed~~ specified in Annex A.

Tables 3 and 4 provide rated life and luminous flux maintenance values for continuous operation.

Documents
Document Sharing Hub

Full document details: IEC 60810 2017 RLV

Table 3 – Rated life values for continuous operation

Filament lamp data sheet number		Type	12 V			24 V		
IEC 60809[a]	UN[b]	Category	Test V	B_3/h	T_c/h	Test V	B_3/h	T_c/h
Lamps for front lighting applications								
2310	R37-H1	H1	13,2	150	400	28,0	90	250
2320	-	H2	13,2	90	250	28,0	90	250
2330	R37-H3	H3	13,2	150	400	28,0	90	250
2120	R37-H4	H4 (HB/LB)	13,2	125/250	250/500	28,0	100/200	200/400
2315	R37-H7	H7	13,2	300	500	28,0	200	400
2365	R37-H8	H8, H8B	13,2	400	800			
2370	R37-H9	H9, H9B	13,2	250	500			
2375	R37-H10	H10	13,2	800	1 600			
2380	R37-H11	H11, H11B	13,2	350	600	28,0	300	600
2385	R37-H12	H12	13,2	480	970			
-	R37-H13	H13,H13A (HB/LB)	13,2	170/1 200	350/2 500			
-	R37-H15	H15 (HB/DRL)	13,2	250/2 000	500/4 000	28,0	200/1 500	400/3 000
-	R37-H16	H16, H16B	13,2	500	1 000			
-	R37-H17	H17	13,2	100/~~350~~ 200	200/~~700~~ 400			
-	R37-H18	H18	13,2	300	500			
-	R37-H19	H19 (HB/LB)	13,2	125/250	250/500			
-	R37-H20	H20	13,2	100	200			
3430	R37-H27W	H27W/1 H27W/2	13,5	90	190			
2325	R37-HB3	HB3/ HB3A	13,2	250	500			
2335	R37-HB4	HB4/ HB4A	13,2	850	1 700			
2420	R37-HIR2	HIR2	13,2	300	600			
2130	R37-HS1	HS1 (HB/LB)	13,2	~~150~~ 75/150	~~300~~ 150/300			
2340	R37-HS2	HS2	13,2	100	250			
~~-~~	~~R37-P24W~~	~~PSX24W~~	~~13,2~~	~~1000~~	~~2000~~			
~~-~~	~~R37-P24W~~	~~PX24W~~	~~13,2~~	~~1000~~	~~2000~~			
-	R37-PSX26W	PSX26W	13,2	1 000	2 000			
2110	R37-R2	R2 (HB / LB)	13,2	30/60	90/160			
2150	R37-S1/S2	S2	13,2	~~100~~ 50/100	~~200~~ 100/200			
Lamps for signalling applications								
		C5W	13,5	350	750	28,0	120	350
3410	R37-H6W	H6W, HY6W	13,5	350	700			
-	R37-H10W	H10W/1	13,5	150	400			
-	R37-H10W	HY10W/1	13,5	300	600			
3420	R37-H21W	H21W	13,5	200	400	28,0	90	300

AVA Documents
Document Sharing Hub
Full document details: IEC 60810 2017 RLV

Filament lamp data sheet number		Type	12 V			24 V		
IEC 60809[a]	UN[b]	Category	Test V	B_3/h	T_c/h	Test V	B_3/h	T_c/h
-	R37-HY21W	HY21W	13,5	200	400	28,0	90	180
-	R37-P13W	P13W	13,5	4 000	8 000			
-	R37-P19W	P19W	13,5	1 000	2 000			
3310	R37-P21W	P21W	13,5	120	320	28,0	60	160
3120	R37-P21/4W	P21/4W	13,5	60/600	160/1 600	28,0	60/600	160/1 600
3110	R37-P21/5W	P21/5W	13,5	60/600	160/1 600	28,0	60/600	160/1 600
-	R37-P24W	P24W	13,5	750	1500			
3315	R37-P27W	P27W	13,5	550	1320			
-	R37-P27/7W	P27/7W	13,5	550/3 690	1 320/8 820			
-	R37-PR21W	PR21W	13,5	120	320	28,0	60	160
~~-~~	~~R37-PR21/4W~~	~~PR21/4W~~	~~13,5~~	~~60/600~~	~~160/ 1600~~			
-	R37-PR21/5W	PR21/5W	13,5	60/600	160/1 600			
~~-~~	~~R37-P27/7W~~	~~PR27/7W~~	~~13,5~~	~~550/3600~~	~~1300/8000~~			
-	R37-P19W	PSY19W	13,5	1 200	2 400			
-	R37-P24W	PSY24W	13,5	1 000	2 000			
-	R37-P19W	PY19W	13,5	1 200	2 400			
3311	R37-PY21W	PY21W	13,5	120	320	28,0	60	160
-	R37-P24W	PY24W	13,5	1 000	2 000			
3141	R37-PY27/7W	PY27/7W	13,5	550/3 600	1 300/8 000			
3320	R37-R5W	R5W	13,5	100	300	28,0	80	225
3330	R37-R10W	R10W	13,5	100	300	28,0	80	225
-	R37-R10W	RY10W	13,5	100	300			
3340	R37-T4W	T4W	13,5	300	750	28,0	120	350
4310	R37-W3W	W3W	13,5	500	1 500	28,0	400	1 100
4320	R37-W5W	W5W	13,5	200	500	28,0	120	350
4340	R37-W16W	W16W	13,5	250	700			
4321	R37-W5W	WY5W	13,5	200	500			

AVA Documents
Document Sharing Hub
Full document details: IEC 60810 2017 RLV

Filament lamp data sheet number		Type	12 V			24 V		
IEC 60809[a]	UN[b]	Category	Test V	B_3/h	T_c/h	Test V	B_3/h	T_c/h
4120	R37-C21W	C21W	13,5	40	110			
-	R37-WY16W	WY16W	13,5	250	700			
-	R37-W21W	W21W	13,5	120	320			
-	R37-W21/5W	W21/5W	13,5	60/600	160/1 600			
-	R37-WY21W	WY21W	13,5	120	320			
-	R37-W15/5W	W15/5W	13,5	120/600	320/1 600			
-	R37-W10W	W10W	13,5	100	300			
-	R37-WY10W	WY10W	13,5	100	300			

The values indicated are minimum requirements. Depending on some particular customers' specifications, different values may be obtained, i.e. shorter life/higher luminous flux or longer life/lower luminous flux. This shall be negotiated between filament lamp manufacturers and their customers.

If there is no direct contact between the customer and supplier, the information on deviation from recommended life time data shall be given on the package and/or in publicly available technical documentation.

[a] If a UN sheet number is referenced, the IEC sheet number refers to a data sheet withdrawn with IEC 60809:1995/AMD5:2012 and is given for information only.

[b] The number in front of the dash indicates the number of the UN regulation.

Documents
Document Sharing Hub
Full document details: IEC 60810 2017 RLV

Table 4 – Rated luminous flux-maintenance values for continuous operation

Filament lamp data sheet number		Type	12 V			24 V		
IEC 60809[e]	UN[f]	Category	Test V	Luminous flux maintenance		Test V	Luminous flux maintenance	
				h	%		h	%
Lamps for front lighting applications								
2110	R37-R2	R2	13,2	55[c] 110[d]	85 70	28,0 28,0	55[c] 110[d]	85 70
2120	R37-H4	H4	13,2	110[c] 225[d]	85 85	28,0	110[c] 225[d]	85 85
2125	-	H6	14,0	75[c] 150[d]	85 80	–	–	–
2305		H5	14,0	75	85	–	–	–
2310	R37-H1	H1	13,2	170	90	28,0	170	90
2320		H2	13,2	170	90	28,0	170	90
2330	R37-H3	H3	13,2	170	90	28,0	170	90
3110	R37-P21/5W	P21/5W	13,5	110[a] 750[b]	70 70	28,0	110[a] 750[b]	70 70
3120	R37-P21/4W	P21/4W	13,5	110[a]750[b]	70 70	28,0	Under consideration	Under consideration
3310	R37-P21W	P21W	13,5	110	70	28,0	110	70
3320	R37-R5W	R5W	13,5	150	70	28,0	150	70
3330	R37-R10W	R10W	13,5	150	70	28,0	150	70
3340	R37-T4W	T4W	13,5	225	70	28,0	225	70
4110	R37-C5W	C5W	13,5	225	60	28,0	225	60
4120	R37-C21W	C21W	13,5	75	60	–	–	–
4310	R37-W3W	W3W	13,5	750	60	28,0	750	60
4320	R37-W5W	W5W	13,5	225	60	28,0	225	60

The values indicated are minimum requirements. Depending on some particular customers' specifications, different values may be obtained, i.e. shorter life/higher luminous flux or longer life/lower luminous flux. This shall be negotiated between filament lamp manufacturers and their customers.

Luminous flux-maintenance values for extended operation times are under consideration.

[a] High-wattage filament.

[b] Low-wattage filament.

[c] Main or upper beam filament.

[d] Dipped or lower beam filament.

[e] If a UN sheet number is referenced, the IEC sheet number refers to a data sheet withdrawn with IEC 60809:1995/AMD5:2012 and is given for information only.

[f] The number in front of the dash indicates the number of the UN regulation.

AVA Documents Document Sharing Hub

Full document details: IEC 60810 2017 RLV

6 Requirements and test conditions for discharge lamps

6.1 Basic function and interchangeability

Discharge lamps shall comply with the technical requirements of IEC 60809.

6.2 Mechanical strength

6.2.1 Bulb-to-cap connection

The bulb shall be strongly secured to the cap. Compliance is checked by means of the bulb deflection test conducted in accordance with Annex E.

6.2.2 Cable-to-cap connection (if any)

If the cable has a fixed connection to the cap, it shall withstand a pulling force of 60 N. The force shall be applied in the direction of the (straight) cable.

6.3 Characteristic life ~~T~~ T_c

The life ~~T~~ T_c measured on a test quantity of at least 20 lamps shall be not less than the value declared by the manufacturer, which shall be at least 3 000 h. Compliance is checked by tests as ~~prescribed~~ specified in Annex D.

6.4 Life B_3

The life B_3 measured on a test quantity of at least 20 lamps shall be not less than the value declared by the manufacturer, which shall be at least 1 500 h. Compliance is checked by tests as ~~prescribed~~ specified in Annex D.

6.5 Luminous flux maintenance

The luminous flux maintenance shall be at least 60 % of the initial luminous flux. Compliance is checked by tests as ~~prescribed~~ specified in Annex D.

Values are based on a non-compliance level of 10 %.

6.6 Resistance to vibration and shock

In the event of service life being influenced by vibration and shock, the test methods and schedules in Annex B shall be used to assess the performance.

The discharge lamps are deemed to have satisfactorily completed the wideband or narrowband random vibration test as described in Annex B, if they continue to function during and after the test. Moreover, the position of the electrodes shall comply with the dimensional requirements as ~~prescribed~~ specified in the relevant standard.

Values are based on a non-compliance level of 4 %.

Precautions should be taken to avoid potential hazards due to high voltages, UV radiation and risk of bulb breakage during starting, run-up and operation of some discharge lamp types.

6.7 Discharge lamps with integrated starting device

The total weight of the lamp shall not exceed 75 g. Information for ballast design is given in Annex G.

Documents
Document Sharing Hub
Full document details: IEC 60810 2017 RLV

6.8 Discharge lamps with integrated starting device and integrated ballast

The total weight of the lamp shall not exceed 120 g.

The centre of gravity of lamps using IEC cap PK32d shall be positioned within the shape of a cylinder as indicated by the shaded areas in Figure 6.

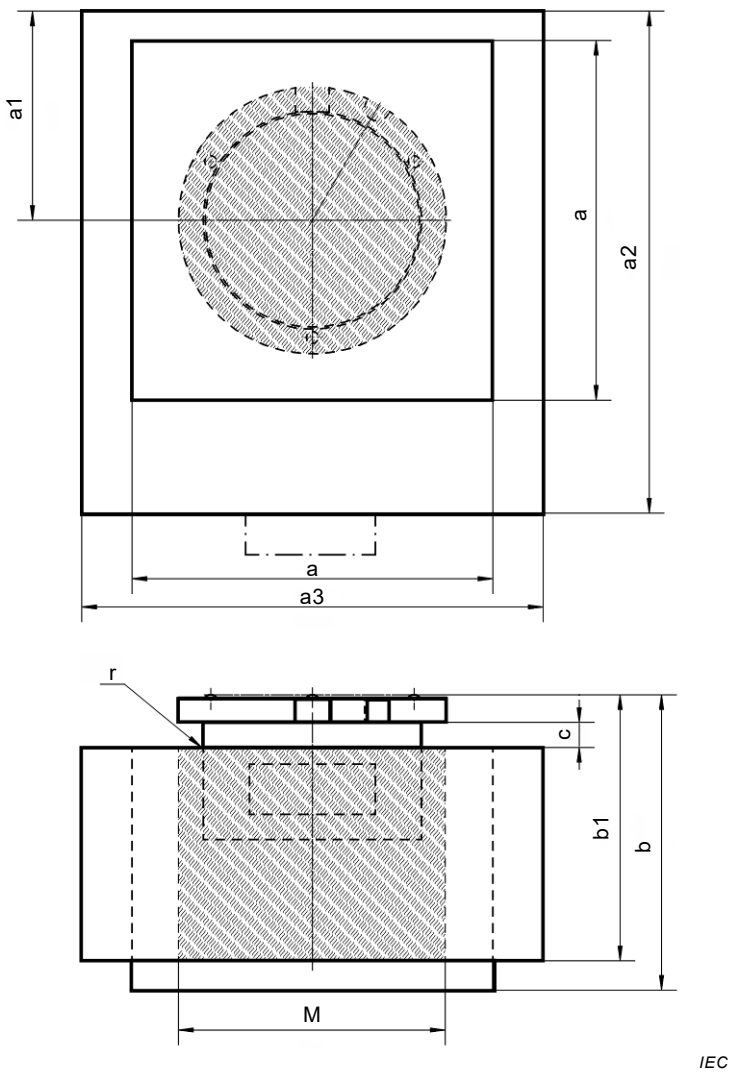

Figure 6 – Position of the centre of gravity (shaded areas)

7 Requirements and test conditions for LED light sources

7.1 Basic function and interchangeability

LED light sources shall:

- be so designed as to be and to remain in good working order when in normal use;
- exhibit no fault in design or manufacture;
- exhibit no scores or spots on their optical surfaces which might impair their efficiency and their optical performance.

Replaceable LED light sources shall be equipped with caps complying with IEC 60061-1. The cap shall be strong and firmly secured to the rest of the LED light source.

AVA Documents Document Sharing Hub

Full document details: IEC 60810 2017 RLV

To ascertain whether LED light sources ~~conform to these~~ comply with the requirements above, a visual inspection, a dimension check and, where necessary, a trial fitting shall be carried out.

LED light sources shall comply with the technical requirements of IEC 60809.

In the case of LED light sources with more than one function, each function shall be tested separately, unless specified differently.

If an electronic light source controlgear (ECG) is needed to operate the LED light source, the test shall be performed with an appropriate ECG.

7.2 UV radiation

The UV-radiation of the LED light source shall be determined according to 5.9 of IEC 60809:2014. If $k_{UV} \leq 10^{-5}$ W/lm the light source is of the low-UV type.

7.3 Luminous flux and colour maintenance

The luminous flux maintenance value L_{70} and the colour maintenance shall be measured on a test quantity of at least 20 LED light sources according to the procedure given in Annex I.

For very small production batches, a test quantity less than 20 may be acceptable.

The manufacturer shall declare and determine the ~~L_{70} T_c and~~ $L_{70}B_{10}$ values.

The measured values shall be not less than the value declared by the manufacturer.

For LED light sources which were approved under the corresponding UN Regulation 128, the $L_{70}B_{10}$ values shall be not less than those specified in Table 5.

Documents
Document Sharing Hub
Full document details: IEC 60810 2017 RLV

Table 5 – Minimum $L_{70}B_{10}$ values for ~~standardised~~ replaceable LED light sources

Category according to UN R 128	Minimum $L_{70}B_{10}$ h
LR1	2 200 ~~a~~ [mi] 1 000 ~~b~~ [ma]
LW2	4 000
LR3A, LR3B	1 000
LR4A, LR4B	2 200 [mi] 1 000 [ma]
LR5A, LR5B	1 000
LW3A, LW3B	2 200
LW5A, LW5B	4 000
LY3A, LY3B	500 [fl]
LY5A, LY5B	500 [fl]
Key ~~[a] low power function~~ ~~[b] high power function~~ [mi] minor function [ma] major function [fl] tested in flashing mode, i.e. ON/OFF ratio of 1:1	
NOTE In the case of pulse width modulation (PWM) operation, it can be expected that the $L_{70}B_{10}$ value is higher (depending on duty cycle).	

Table 6 shows typical “on”-time values for the different functions per 100 000 km, for information.

Documents
Document Sharing Hub
Full document details: IEC 60810 2017 RLV

Table 6 – Typical "on"-times for the different functions per 100 000 km drive distance, based on an average speed of 33,6 km/h [a]

Intended application	Typical "on" times in hours per 100 000 km drive distance
Rear registration plate lamp	1 100 [b]
Direction indicator lamp	250
Front and rear position lamp	1 100 [b]
Stop lamp	500
End-outline marker lamp	1 100
Reversing lamp	50
Rear fog lamp	50
Daytime running lamp (DRL)	2 000
Side marker lamp	1 100 [b]
Cornering lamp	100
Low beam lamp (passing beam)	1 000
High beam lamp (driving beam)	100 [c]
Front fog lamp	100

[a] The average driving speed is based on the composition of driving cycles defined in UN R101.

[b] In case these light sources are intended for vehicles where these functions are also switched on together with the DRL function, then the value of 3 100 shall be used.

[c] In case these light sources are intended for vehicles which use the 'adaptive driving beam' function of UN R123, then the value of 200 shall be used.

If the specific requirements of the intended use are known for the LED light source, these should be taken into account.

Compliance is checked by the tests ~~prescribed~~ specified in Annex I.

Values are based on a non-compliance level of 10 %.

An example of LED light source life-time data is given in Table 7.

Table 7 – Example of product data

Type	Intended use	$L_{70}B_{10}$	~~L_{70}, T_c~~
MD0815	Stop lamp	1 500 h	~~2 500 h~~

7.4 Resistance to vibration and shock

In the event of service life being influenced by vibration and shock, the test methods and schedules in Annex B shall be used to assess the performance.

The light sources are deemed to have satisfactorily completed the wideband or narrowband random vibration test as described in Annex B, if they continue to function during and after the test.

Values are based on a non-compliance level of 4 %.

Documents
Document Sharing Hub
Full document details: IEC 60810 2017 RLV

7.5 Electromagnetic compatibility

Replaceable LED light sources shall be classified according to CISPR 25.

7.6 Powered thermal cycling test

This test is intended to determine the ability of the LED light source to withstand changes of ambient temperatures.

LED light sources shall be tested according to test condition “Nb” of IEC 60068-2-14, under the following conditions (see Figure 7):

- rate of change of temperature is 3 K/min;
- the exposure time t_1 shall be a minimum of 2 h;
- the number of cycles shall be 15;
- the test shall be performed on a minimum of 20 LED light sources;
- during the testing, the LED light source shall be continuously switched on and off in 5 min intervals (5 min on, 5 min off, 5 min on, etc.);
- the test voltage shall be chosen according to Clause I.2 of this document;
- temperatures T_A and T_B shall be chosen according to the classes defined in Table 8.

Table 8 – Temperature classes for the powered thermal cycling test

	Lower temperature T_A	Higher temperature T_B
Class A	–40 °C	+60 °C
Class B	–40 °C	+85 °C
Class C	–40 °C	+105 °C

For LED light sources that require an external light source controlgear, the light source controlgear may also be subjected to this test.

LED light sources that require additional provisions for thermal management shall be tested with these provisions in place. A description of the thermal management design shall be included in the test report.

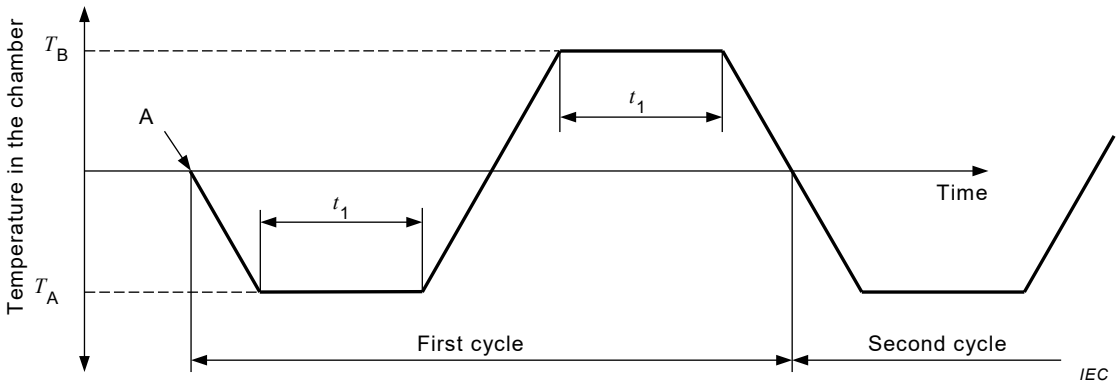

Key

A start of first cycle

Figure 7 – Extract from IEC 60068-2-14 Test Nb, showing the temperature cycle profile

Documents
Document Sharing Hub
Full document details: IEC 60810 2017 RLV

After the powered thermal cycling test, the electrical and photometrical performance of the LED light source shall be tested.

The LED light sources are deemed to have satisfactorily completed the test if they continue to function after the test and if the photometrical and electrical performance is within the specifications provided by the manufacturer.

Values are based on a non-compliance level of 10 %.

7.7 Mass

The total mass of the LED light source shall not exceed the value given in Table 9 or, where not given, the value in the system information on cap sheets specified in IEC 60061-1.

Table 9 – Maximum mass for LED light sources

LED light source category	Cap	Mass g
LR1	PGJ21	60
LW2	PGJY50	50
LR3, LR4, LR5, LW3, LW5, LY3, LY5	PGJ18.5	35

7.8 Typical circuits for LED light sources

7.8.1 General

The purpose of 7.8 is to show typical electrical circuits for LED light sources.

7.8.2 Typical circuits for LR3, LR5, LY3, LY5, LW3 and LW5 LED light sources

A typical electrical circuit for LR3, LR5, LY3, LY5, LW3, and LW5 light source contains

- one or more LED dies/packages and an electronic driver,
- an electronic protection,
- an optional resistor to ensure a minimum current for special application requirements,

as shown in Figure 8.

Documents
Document Sharing Hub

Full document details: IEC 60810 2017 RLV

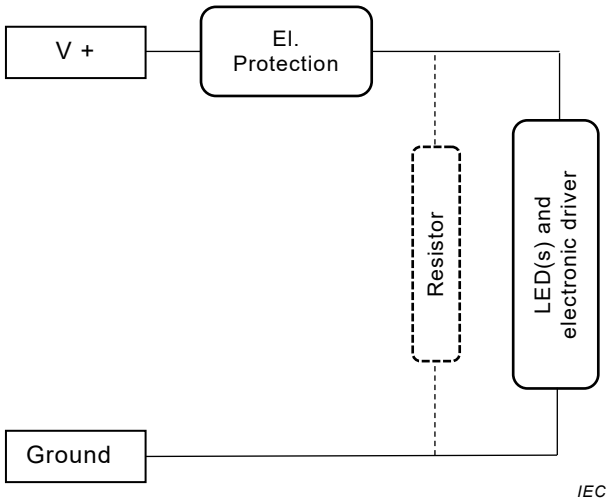

Figure 8 – Typical electrical circuit for an LR3, LR5, LY3, LY5, LW3 and LW5 LED light source

7.8.3 Typical circuits for LR4 LED light sources

A typical electrical circuit for LR4 light source contains

- two electrical strings (with common ground),
- for each string one or more LED dies/packages and an electronic driver,
- for each string an electronic protection,
- a resistor to ensure a minimum current of 10 mA in the “major function” string

as shown in Figure 9.

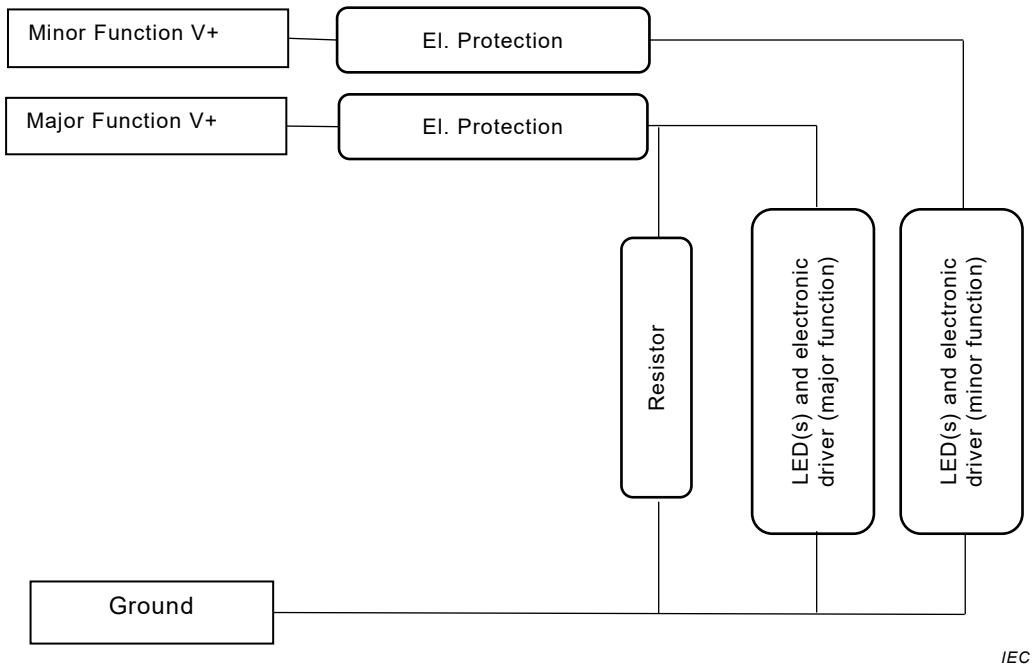

Figure 9 – Typical electrical circuit for an LR4 LED light source

Documents
Document Sharing Hub
Full document details: IEC 60810 2017 RLV

7.9 Maximum power consumption

For the LED light sources listed in Table 10, the maximum power consumption at test voltages of 9 V DC, 13,5 V DC and 16 V DC shall not exceed the values given in Table 10.

Table 10 – Maximum power consumption

	Test voltage		
	9 V DC	**13,5 V DC**	**16 V DC**
LR3	3,5 W	3,5 W	5 W
LR4 (minor/major function)	1,0 W / 3,5 W	1,0 W / 3,5 W	1,5 W / 5 W
LR5	3,5 W	3,5 W	5 W
LW3	5 W	5 W	10 W
LY3 [a]	5 W	5 W	10 W
LW5	8 W	8 W	10 W
LY5 [a]	8 W	8 W	12 W
NOTE The values given in Table 10 for maximum power at 13,5V DC are taken from UN R128. [a] During the ON state, tested in flashing mode, i.e. ON/OFF ratio of 1:1.			

7.10 Overvoltage test

The purpose of this test is to evaluate the performance of the LED light source under stress due to overvoltage. The test shall be conducted on a test quantity of at least 20 LED light sources with the following test conditions:

- for a 12 V-light source: test voltage: 26 V;
- for a 24 V-light-source: test voltage: 52 V;
- ambient temperature: 23 °C ± 5 °C;
- duration 60 s.

The light sources are deemed to have satisfactorily completed the test, if after the test

- the luminous flux has not changed by more than 20 % compared to the initial value;
- the chromaticity values (cx, cy) remain within the colour boundaries;
- the electrical current has not changed by more than 10 % compared to the initial value.

Values are based on a non-compliance level of 10 %.

7.11 Reverse voltage test

The purpose of this test is to evaluate the performance of the LED light source under stress due to reverse voltage. The test shall be conducted on a test quantity of at least 20 LED light sources with the following test conditions:

- for a 12 V-light source: test voltage: 14 V DC with reverse polarity;
- for a 24 V-light-source: test voltage: 28 V DC with reverse polarity;
- ambient temperature: 23 °C ± 5 °C
- duration 60 s.

The light sources are deemed to have satisfactorily completed the test, if after the test

- the luminous flux has not changed by more than 20 % compared to the initial value;

AVA Documents
Document Sharing Hub
Full document details: IEC 60810 2017 RLV

- the chromaticity values (cx, cy) remain within the colour boundaries;
- the electrical current has not changed by more than 10 % compared to the initial value.

Values are based on a non-compliance level of 10 %.

7.12 Transient voltage test (field decay)

The purpose of this test is to evaluate the performance of the LED light source under stress due to transient voltage (field decay). The test shall be conducted on a test quantity of at least 20 LED light sources with the following test conditions:

- conditions: see Figure 10 and Table 11 (see also ISO 7637-2, pulse 1),
- test pulse severity level III;
- minimum 500 pulses;
- pulse repetition ≥ 0,5 s.

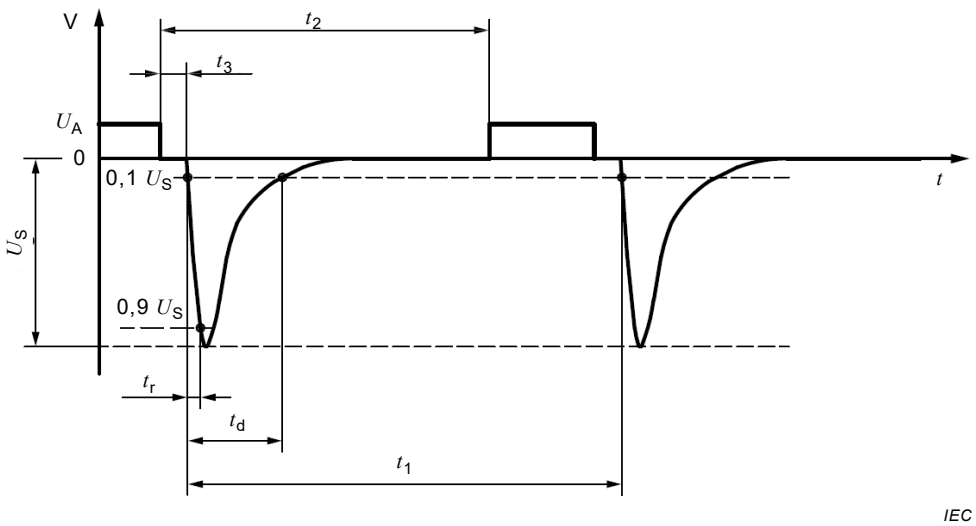

Figure 10 – Profile of pulse 1 from ISO 7637-2

Table 11 – Test parameters for pulse 1 from ISO 7637-2

Parameters	Nominal 12 V system	Nominal 24 V system
U_s	-75 V to -150 V	-300 V to -600 V
R_i	10 Ω	50 Ω
t_d	2 ms	1 ms
t_r	$\left(1^{0}_{-0,5}\right)$ µs	$\left(3^{0}_{-1,5}\right)$ µs
t_1 [a]	≥ 0,5 s	
t_2	200 ms	
t_3 [b]	< 100 µs	

[a] t_1 shall be chosen such that it is the minimum time for the DUT to be correctly initialized before the application of the next pulse and shall be ≥ 0,5 s.

[b] t_3 is the smallest possible time necessary between the disconnection of the supply source and the application of the pulse.

The light sources are deemed to have satisfactorily completed the test, if after the test

AVA Documents Document Sharing Hub

Full document details: IEC 60810 2017 RLV

- the luminous flux has not changed by more than 20 % compared to the initial value;
- the chromaticity values (cx, cy) remain within the colour boundaries;
- the electrical current has not changed by more than 10 % compared to the initial value.

Values are based on a non-compliance level of 10 %.

7.13 Transient voltage test (load dump)

The purpose of this test is to evaluate the performance of the LED light source under stress due to transient voltage (load dump). The test shall be conducted on a test quantity of at least 20 LED light sources with the following test conditions:

- conditions: see Figure 11 and Table 12 (see also ISO 7637-2, pulse 2a);
- test pulse severity level III;
- minimum 500 pulses;
- pulse repetition ≥ 0,2 s.

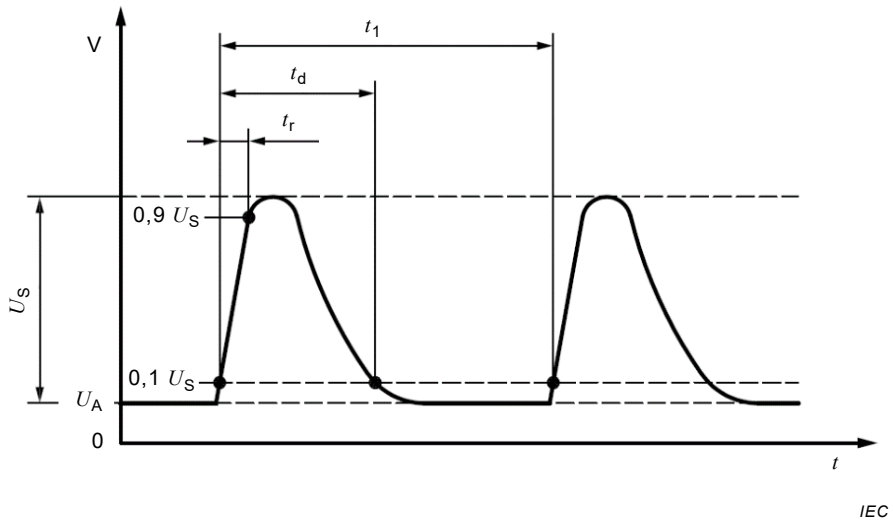

Figure 11 – Profile of pulse 2a from ISO 7637-2

Table 12 – Test parameters for pulse 2a from ISO 7637-2

Parameters	Nominal 12 V and 24 V system
U_s	+37 V to + 112 V
R_i	2 Ω
t_d	0,05 ms
t_r	$\left(1^{0}_{-0,5}\right)$ µs
t_1 [a]	0,2 s to 5 s
[a] The repetition time t_1 can be short depending on the switching. The use of a short repetition time reduces the test time.	

The light sources are deemed to have satisfactorily completed the test, if after the test

- the luminous flux has not changed by more than 20 % compared to the initial value;
- the chromaticity values (cx, cy) remain within the colour boundaries;
- the electrical current has not changed by more than 10 % compared to the initial value.

Documents
Document Sharing Hub

Values are based on a non-compliance level of 10 %.

7.14 Electrostatic discharge test (ESD)

The purpose of this test is to evaluate the performance of the LED light source under stress due to electrostatic discharge at the terminals of the LED light source and at the housing. The test and classification shall be conducted according to ISO 10605 on a test quantity of at least 20 LED light sources. Details of the testing and applied criteria, for example severity level, shall be reported.

7.15 Pulsed operating life (PLT) test

The purpose of this test is to evaluate the performance of the LED light source under stress due to pulsed operation.

- duration 1 000 h;
- peak voltage 13,5 V;
- T_{ambient} = 23 °C ± 5 °C;
- pulse width 100 µs, duty cycle 3 %. This corresponds to a frequency of 300 Hz.

The light sources are deemed to have satisfactorily completed the test, if after the test

- the luminous flux has not changed after 100 h by more than 10 % compared to the initial value;
- the luminous flux has not changed after 1 000 h by more than 20 % compared to the initial value;
- the chromaticity values (cx, cy) remain within the colour boundaries:
- the electrical current has not changed by more than 10 % compared to the initial value.

Values are based on a non-compliance level of 10 %.

8 Requirements and test conditions for LED packages

8.1 LED package stress test qualification

Clause 8[2] defines minimum stress test driven qualification requirements and references test conditions for qualification of LED packages.

The purpose of this document is to determine that a LED package is capable of passing the specified stress tests and thus can be expected to give a certain level of quality/reliability in automotive lighting applications.

“Stress test qualification” according to this document is defined as successful completion of the test requirements outlined in this document.

Subclause 8.6 defines a set of qualification tests that shall be considered for new LED package qualifications. In the case of requalification associated with a design or process change, a limited set of qualification tests may be considered, see Annex L.

Where appropriate, family qualifications ~~can~~ may be done, a rationale should be given by the supplier.

[2] The approach on LED package stress test qualification as described in this document is derived from a similar approach developed by the Automotive Electronics Council (AEC – Q101: Stress test qualification for automotive grade discrete semiconductors).

AVA Documents
Document Sharing Hub

~~Examples for families:~~

- ~~same chip technology in different LED packages;~~
- ~~same phosphor systems in different LED packages.~~

The family may be classified by following major key characteristics of LED packages.

This is not recommended to transfer results, in case of different

- package material (e.g. pre-mold, ceramic, epoxy) and design, or
- casting material (e.g. silicone, epoxy)/lens/window, or
- conversion (e.g. layer transfer, volume conversion), or
- interconnect die bond (e.g. glued, bonded)/wire bond, or
- chip technology (e.g. AlInGaP, AlInGaN, AlInGaAs, sapphire, regardless of colour).

Any deviation from this recommendation shall be documented.

Transfer of results is possible, in case of different

- phosphor CCT (same or better performance) or
- chip size/number of chips in LED package (same or smaller current density, scalable).

LED packages having the same key characteristics may be released by family qualifications.

This document makes reference to other IEC standards or standards from other organizations (e.g. JEDEC). Where relevant, further details on the test definitions can be found in these documents. Test conditions in this document may deviate from test conditions in the reference documents (e.g. PTMCL condition 2). In such a case, further definitions in the reference document shall still be applied as appropriate.

The results of LED package testing may be reported by using the communication sheet as specified in Annex K.

A guideline on LED package robustness validation is given in Annex M.

8.2 Test samples

8.2.1 Lot requirements

Unless specified otherwise in 8.6, a total of minimum 78 LED packages taken from three different batches of 26 each shall be used for each test. For family qualification, the three different batches shall be considered to represent the whole variety of the qualification family.

The sample size may be reduced due to technical problems or experimental limitations to a minimum of 3 x 5 LED packages. The reason(s) for sample size reduction shall be provided with the report.

8.2.2 Production requirements

All qualification LED packages shall be produced on tooling and processes at the manufacturing site that will be used to support LED package deliveries at projected production volumes.

Documents
Document Sharing Hub

Full document details: IEC 60810 2017 RLV

8.2.3 Pre- and post-stress test requirements

Electrical and photometric values (forward voltage, luminous flux or radiant power and/or intensity, colour parameter) shall be measured at the nominal test conditions as defined in the product specification before and after stress testing (see also 8.6.1).

NOTE A simple light/no light test is under consideration for testing at different temperatures.

All LED packages used for qualification shall meet the product specification parameters measured at the nominal test conditions before stress testing.

8.2.4 Assembly of LED packages on test boards

LED packages may need to be assembled on test boards. An appropriate choice of test board, interconnect material and process shall be made by the manufacturer. The choice of test board, interconnect material and process shall be documented for each individual test in the test report.

8.2.5 Moisture pre-conditioning (MP)

Moisture preconditioning is applicable to surface mountable devices designed for reflow soldering. All qualification LED packages used for the following tests:

- 8.6.4 TMCL,
- 8.6.5 WHTOL,
- 8.6.6 PTMCL, and
- 8.6.14 RSH-reflow

shall be subject to moisture preconditioning according to JESD22-A113F. The initial electrical and photometrical test according to 8.6.1 shall be executed after the moisture pre-conditioning.

8.2.6 Thermal resistance (TR) test

The thermal resistance shall be tested according to JESD51-50, JESD51-51, JESD51-52 and JESD51-53; the resulting $R_{\text{th electr}}$ and the optical power radiation of the LED package for the calculation of "$R_{\text{th,real}}$" should be recorded and the $R_{\text{th,electr}}$ (typical) and the $R_{\text{th,electr}}$ (maximum) shall be reported (reporting should be done in the communication sheet according to Annex K).

8.3 Definition of failure criteria

A LED package shall be considered to have failed if any of the following criteria applies.

- Forward voltage V_f at the nominal drive current I_f deviates by more than ±10 % of the initial value.
- Radiant power or luminous flux or intensity at the nominal drive current I_f deviates by more than
  - ±20 % of the initial value, or
  - ±30 % of the initial value

where these options of ±20 % or ±30 % are at the choice of the manufacturer.

  - A deviation of ±50 % of the initial value may be acceptable for some interior lighting applications (e.g. LED packages for instrument clusters).
- Colour coordinates x,y at the nominal drive current I_f of white LED deviate by more than ±0,01 from the initial value. The permitted deviation for saturated colour LEDs is under

AVA Documents
Document Sharing Hub
Full document details: IEC 60810 2017 RLV

consideration. A deviation of ±0,02 of the initial value may be acceptable for some interior lighting.

- The LED package exhibits externally visible physical damage attributable to the environmental test (e.g. delamination). However, if the cause of failure is agreed (by the manufacturer and the user) to be due to mishandling or ESD, the failure shall be discounted, but reported as part of the data submission. A microscope with a magnification in a range of 40X to 50X shall be used.

Failures in the interconnect to the test board or in the test board that are not related to a LED package failure shall be discounted, but reported as part of the data submission.

8.4 Choice between test conditions

A manufacturer shall select a specific luminous flux maintenance class according to 8.3 prior to the qualification testing. The appropriate pass/fail criteria shall be applicable.

Furthermore, the manufacturer shall choose between different classes of test conditions where applicable (e.g. TMCL cycle condition 1 to 4 in 8.6.4). The test condition shall be documented in the test report.

In general, it may be assumed that passing the harsher test conditions implies that the more relaxed conditions would also be passed (e.g. passing TMCL condition 3 implies that TMCL conditions 1 and 2 would also be passed).

8.5 Criteria for passing qualification/requalification

All LED packages under test shall pass the tests, otherwise the LED package or LED package family is considered to have failed.

LED packages that have failed the acceptance criteria of tests required by this document require the supplier to satisfactorily determine root cause and corrective action to assure the user that the failure mechanism is understood and contained and the corrective and preventive actions are confirmed to be effective by repeating the applicable qualification test(s) successfully.

8.6 Qualification test ~~definition~~

8.6.1 Pre- and post- electrical and photometric test

All LED packages shall be tested at nominal drive current according to the following requirements of the appropriate LED package specification (manufacturer's datasheet) prior to and after the following tests except for 8.6.2 and 8.6.10:

- luminous flux or radiant power or intensity (whichever is appropriate);
- forward voltage;
- colour coordinates or dominant or peak wave length (whichever is appropriate).

NOTE The choice between dominant and peak wavelength is under consideration.

In addition, the forward voltage at the minimum (or lower) and maximum drive current shall be recorded.

8.6.2 Pre- and post- external visual (EV) test

The construction, marking and workmanship of the LED package shall be inspected according to JESD22-B101B prior to and after the following tests except for 8.6.10.

Documents
Document Sharing Hub
Full document details: IEC 60810 2017 RLV

8.6.3 High temperature operating life (HTOL) test

The purpose of this test is to evaluate the performance of the LED package under stress due to high temperature operation. The test shall be conducted according to JESD22-A108D; the following test conditions apply:

- Duration 1 000 h.
- ~~If no derating is required, the testing shall be doneat:~~
  - ~~T_s = 85 °C with the maximum drive current, and~~
  - ~~at the max. specified T_s with the corresponding maximum rated drive current.~~
- ~~If derating is required, the testing shall be done:~~
  - ~~with the maximum drive current at the corresponding max. rated T_s, and~~
  - ~~at the max. specified T_s with the corresponding maximum rated drive current.~~
- the testing shall be done:
  - at the maximum specified drive current with the corresponding maximum rated T_s, and
  - at the maximum specified T_s with the corresponding maximum rated drive current.

8.6.4 Temperature cycling (TMCL) test

The purpose of this test is to evaluate the performance of the LED package under stress due to temperature cycles without operation of the LED. The LED package shall be tested according to ~~JESD 22-A104D~~ JESD22-A104E; the following test conditions apply:

- duration 1 000 cycles;
- soak mode 4 (minimum soak time 15 min).

The following minimum and maximum temperatures for T_s shall be chosen by the manufacturer:

- TMCL condition 1: $T_{s,min}$ = –40 °C; $T_{s,max}$ = 85 °C;
- TMCL condition 2: $T_{s,min}$ = –40 °C; $T_{s,max}$ = 100 °C;
- TMCL condition 3: $T_{s,min}$ = –40 °C; $T_{s,max}$ = 110 °C;
- TMCL condition 4: $T_{s,min}$ = –40 °C; $T_{s,max}$ = 125 °C;
- TMCL condition 5: $T_{s,min}$ = –40 °C; $T_{s,max}$ = 150 °C .

The TMCL condition closest to the manufacturer's operating temperature range according to the appropriate LED package specification (manufacturer's datasheet) shall be chosen unless the manufacturer wishes to test compliance with a more severe cycle condition. The choice of the TMCL cycle condition and the transfer time shall be reported.

8.6.5 Wet high temperature operating life (WHTOL) test

The purpose of this test is to evaluate the performance of the LED package under stress due to temperature and humidity during steady state operation. The LED package shall be tested according to JESD22-A101C; the following test conditions apply:

- duration 1 000 h;
- T_s = 85 °C;
- 85 % RH;
- power cycle 30 min on/30 min off.

The tests shall be performed at the corresponding minimum and maximum rated drive current (i.e. rating at T_s = 85 °C).

Documents
Document Sharing Hub
Full document details: IEC 60810 2017 RLV

8.6.6 Power temperature cycling (PTMCL) test

The purpose of this test is to evaluate the performance of the LED package under stress due to temperature cycles during operation of the LED package. The LED package shall be tested according to JESD22-A105C; the following test conditions apply:

- duration 1 000 temperature cycles;
- power cycle 5 min on/5 min off operated at the corresponding maximum rated drive current.

The manufacturer shall select one of the following test types:

- PTMCL condition 1: T_s –40 °C to 85 °C, (test condition A according to JESD22-A105C);
- PTMCL condition 2: T_s –40 °C to ~~105~~ 100 °C, (transition and dwell time according to test condition A of JESD22-A105C);
- PTMCL condition 3: T_s –40 °C to 125 °C, (test condition B according to JESD22-A105C).

The PTMCL condition closest to the manufacturer's operating temperature range according to the appropriate LED package specification (manufacturer's datasheet) shall be chosen unless the manufacturer wishes to test compliance with a more severe cycle condition. The choice of the PTMCL condition shall be reported.

8.6.7 Electrostatic discharge, human body model (ESD-HBM) test

The purpose of this test is to evaluate the performance of the LED package under stress due to electrostatic discharge using the human body model. The LED package shall be tested according to ANSI/ESDA/JEDEC JS-001-2012.

8.6.8 Electrostatic discharge, machine model (ESD-MM) test

The purpose of this test is to evaluate the performance of the LED package under stress due to electrostatic discharge using the machine model. The LED package shall be tested according to JESD22-A115C.

8.6.9 Destructive physical analysis (DPA) test

The purpose of this test is to evaluate the capability of the device's internal materials, design, and workmanship to withstand forces induced by various stresses induced during environmental testing.

Perform DPA according to Annex J on random samples of good units after completion of the PTMCL test, WHTOL test, H2S and FMGC test (two samples per lot). The post electrical and photometrical test of these samples shall be executed before the destructive physical analysis.

8.6.10 Physical dimensions (PD) test

Verify physical dimensions according to LED package mechanical drawings of the LED package manufacturer.

8.6.11 Vibrations variable frequency (VVF) test

The purpose of this test is to evaluate the performance of the LED package under stress due to mechanical vibrations with variable frequency. The LED package shall be tested according to JESD22-B103B.

Use a constant displacement of 1,5 mm (double amplitude) over the range of 20 Hz to 100 Hz and a 200 m/s^2 constant peak acceleration over the range of 100 Hz to 2 kHz.

Documents
Document Sharing Hub
Full document details: IEC 60810 2017 RLV

8.6.12 Mechanical shock (MS) test

The purpose of this test is to evaluate the performance of the LED package under stress due to mechanical shock. The LED package shall be tested according to JESD22-B110B:

- 15 000 m/s^2 for 0,5 ms;
- five shocks in each direction, three orientations (+ and – $x/y/z$ direction, i.e. 30 shocks).

~~This test is not applicable if wire bonds are casted.~~

8.6.13 Resistance to soldering heat (RSH-TTW) test

The purpose of the TTW ("through the wave") test is to evaluate the performance of the LED package under stress due to soldering heat. The LED package shall be tested according to JESD22-B106D.

This test only applies to LED packages that are declared to be solderable by wave soldering by the manufacturer.

8.6.14 Resistance to soldering heat (RSH-reflow) test

The purpose of this test is to evaluate the performance of the LED package under stress due to soldering heat. The LED package shall be tested according to JESD22-A113F; alternative: ANSI/IPC/ECA J-STD-002C.

Reflow soldering shall be tested three times at 260 °C. Testing according to 8.6.1 shall be carried out before and after each reflow.

This test applies only to LED packages that are specified for reflow soldering.

8.6.15 Solderability (SO) test

~~Details for this test are under consideration.~~

The purpose of this test is to determine the solderability of lead free solder alloys applicable for surface mounted (SMD) LED packages. The LED packages shall be tested according to IEC 60068-2-58.

Sample size: 3 x 10.

8.6.16 Thermal shock (TMSK) test

The purpose of this test is to evaluate the performance of the LED package under stress due to thermal shock. The LED package shall be tested according to JESD22-A106B. The following conditions shall apply:

- duration 1 000 cycles;
- TMSK cycle condition 1: $T_{s,min}$ = –40 °C; $T_{s,max}$ = 85 °C;
- ~~TMSK cycle condition 2: $T_{s,min}$ = –40 °C; $T_{s,max}$ = 125 °C;~~
- TMSK cycle condition 2: $T_{s,min}$ = –40 °C; $T_{s,max}$ = 100 °C;
- TMSK cycle condition 3: $T_{s,min}$ = –40 °C; $T_{s,max}$ = 125 °C;
- liquid to liquid.

The cycle condition closest to the manufacturer's operating temperature range according to the appropriate LED package specification (manufacturer's datasheet) shall be chosen unless the manufacturer wishes to test compliance with a more severe cycle condition. The choice of the TMSK cycle condition shall be reported.

AVA Documents Document Sharing Hub

Full document details: IEC 60810 2017 RLV

8.6.17 Hydrogen sulphide (H_2S) test

The resistance to hydrogen sulphide shall be tested according to IEC 60068-2-43; the following test conditions apply:

- air temperature 40 °C;
- 90 % RH;
- H_2S concentration: ~~10×10^{-6} to~~ 15×10^{-6};
- duration 336 h.

8.6.18 Pulsed operating life (PLT) test

The purpose of this test is to evaluate the performance of the LED package under stress due to pulsed operation. The LED package shall be tested according to JESD22-A108D.

- duration 1 000 h;
- T_s = 55 °C;
- pulse width 100 µs, duty cycle 3 %.

For interior lighting applications the test may be performed at T_s = 25 °C.

The LED package shall be operated at the corresponding maximum rated drive current.

8.6.19 Dew (DEW) test

The purpose of this test is to evaluate the performance of the LED ~~package~~ under stress due to dew deposition. ~~The LED package shall be tested according to JESD 22-A100D.~~ The following conditions shall be applied to the LED package.

~~The LED package shall be cycled from 30 °C to 65 °C. 65 °C shall be maintained for 4 h to 8 h before reducing the temperature to 30 °C. This cycle shall continue for 1 008 h, with relative humidity maintained between 90 % to 98 % in the test chamber.~~

~~No bias shall be applied during this test.~~

The LED package shall be cycled from 10 °C to 80 °C and from 50 % RH to 100 % RH with each cycle of t_{cycle} = 6,5 h, see Figure 12 and detailed description below.

1) When the LED package is initially placed in the chamber, over a 15 min time period the temperature is dropped from 20 °C to 10 °C, and the humidity is raised from 50 % RH to between 50 % to 100 % RH.
2) Hold the LED package for 60 min at 10 °C to ensure it has reached the starting temperature for bedewing. During the first 30 min, the humidity is raised to between 90 % to 100 % RH. During the next 30 min, the humidity is raised to between 95 % to 100 % RH. Now switch over from air condition control to chamber control.
3) Temperature is raised gradually from 10 °C to 70 °C over a 3 h period with heating rate of 20 °C/h, with humidity held between 95 % to 100 % RH . During this time the LED packages are turned on only every 30 min for 2 min with current density of not more than 0,05 A/mm^2, low enough not to heat the LED packages beyond condensation. Except for these 2 min every 30 min, the LED packages shall be turned off.
4) Temperature is raised to 80 °C within a further 30 min. The humidity shall be held between 95 % to 100 % RH.
5) Temperature is decreased to 75 °C and is held for 30 min. The humidity is undefined and uncontrolled during this time. Start of the drying after reaching 75 °C air temperature.

Documents
Document Sharing Hub
Full document details: IEC 60810 2017 RLV

6) Temperature is decreased from 75 °C to 20 °C within 75 min. The humidity is undefined and uncontrolled during this time. This is the end of the first cycle and the DUT shall be dry (RH < 50 %).

7) Each additional cycle starts at step 1 and continues to step 6.

The test is continuous except for where interim measurements are required. Electrical measurements shall be performed not sooner than one hour after removing the LED packages from the stress chamber. For interim readouts, the LED packages shall be returned to stress within four hours after removing them from the stress chamber.

Duration: Typical duration is 10 cycles.

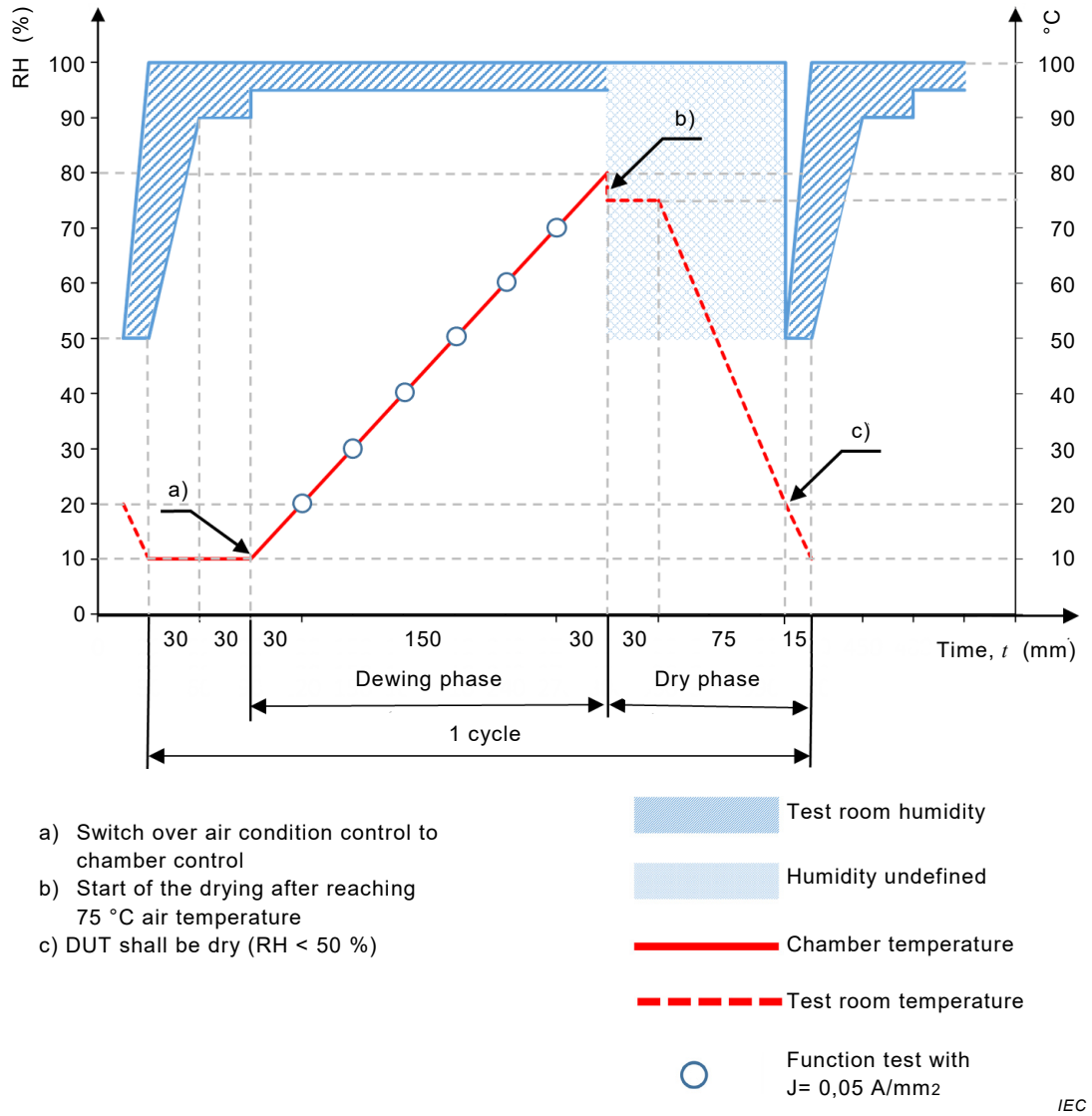

Figure 12 – Temperature–humidity characteristics for the DEW test

8.6.20 Flowing mixed gas corrosion (FMGC) test

The resistance to corrosive gas atmosphere shall be tested according to IEC 60068-2-60; the following test conditions apply:

- test method 4;
- air temperature 25 °C;
- 75 % RH;

Documents
Document Sharing Hub

- H_2S concentration: 10×10^{-9};
  NO_2 concentration: 200×10^{-9};
  Cl_2 concentration: 10×10^{-9};
  SO_2 concentration: 200×10^{-9};
- duration 500 h.

8.6.21 Wire bond pull test (WBP)

The purpose of this test is to measure the wire bond strength of the LED package. This test may be applicable to all versions of available wire bond techniques used for LED packages. The wire bond strength test shall be performed according to MIL-STD 883E. The wire bond strength C_{pk} value shall be > 1,67 and shall be reported separately. See ISO 3534-2 for the definition of the C_{pk} value.

A post-stress test evaluation of wire bond strength is not recommended, since the LED packages are typically encapsulated and the de-capsulation process could influence the result of wire bond strength evaluation. A minimum sample size of 3 x 5 is recommended.

8.6.22 Bond shear test (BS)

The purpose of this test is to determine the strength of the interface between ball bond and die bonding surface, or an wedge/stich bond and a die or package bonding surface. The bond shear test shall be performed according to JESD22-B116. The bond shear C_{pk} value shall be > 1,67 and shall be reported separately. See ISO 3534-2 for the definition of the C_{pk} value.

A post-stress test evaluation of wire bond shear is not recommended, since the LED packages are typically encapsulated and the de-capsulation process could influence the result of wire bond shear evaluation. A minimum sample size of 3 x 5 is recommended.

8.6.23 Die shear test (DS)

The purpose of this test is to determine the quality of the interface between the semiconductor die and package bonding surface. The die shear shall be performed according to MIL-STD 883E. The die shear C_{pk} value shall be > 1,67 and shall be reported separately. See ISO 3534-2 for the definition of the C_{pk} value.

A post-stress test evaluation of the die shear is not recommended, since the LED packages are typically encapsulated and the de-capsulation process could influence the result of die shear evaluation. A minimum sample size of 3 x 5 is recommended.

Documents
Document Sharing Hub
Full document details: IEC 60810 2017 RLV

Annex A
(normative)

Life test conditions for filament lamps

A.1 Ageing

Filament lamps shall be aged at their test voltage for approximately 1 h. For dual-filament lamps, each filament shall be aged separately. Filament lamps which fail during the ageing period shall be omitted from the test results.

A.2 Test voltage

Measurements shall be carried out at the test voltage specified in Clause 5 which shall be a stable DC or AC voltage with a frequency between 40 Hz and 60 Hz.

In the case of non-replaceable filament lamps (defined in IEC 60809), the filament lamp shall be operated at the test voltage specified in the relevant data sheet. In case an electronic regulator is used, such as pulse width modulation (PWM), this non-replaceable filament lamp should be operated in such a way that it does not negatively affect the lifetime of the filament lamp.

NOTE The test voltage is deemed to be stable when the momentary fluctuations do not exceed 1 % and the deviation of the average over the test period does not exceed 0,5 % of the specified value.

A.3 Operating position and operating conditions

Filament lamps shall be operated on a vibration-free test rack with both lamp axis and filament(s) horizontal. In the special case of double-filament lamps which include a shield, this shall be under the dipped or lower-beam filament (H-H line horizontal). In the case of filament lamps with an axial filament, the longer filament support shall be positioned above the filament.

The lamps shall be tested under normal ambient temperature conditions; assumption is 25 °C ± 10 °C.

A.4 Switching cycle

A.4.1 Single-filament lamps

A.4.1.1 Filament lamps for continuous operation

Filament lamps shall be switched off twice daily for periods of not less than 15 min, such periods not being considered as part of the life.

A.4.1.2 Filament lamps for intermittent operation

Filament lamps for intermittent operation as used in stop-lamps and flashing direction indicators shall be operated in the following switching cycle:

- 15 s on for intermittent (flashing) operation;
- 15 s off;
- flashing frequency: 90/min;
- on/off ratio 1:1.

Documents
Document Sharing Hub
Full document details: IEC 60810 2017 RLV

The whole flashing operation time is considered as life.

A.4.2 Dual-filament lamps for headlamps

The filaments shall be operated alternately according to the following cycle and starting with the lower beam filament:

- dipped or lower-beam filament: 15 h on/45 min off;
- main or upper-beam filament: 7,5 h on/45 min off.

The end of the life is determined by failure of either filament.

The off periods are not considered as part of the life.

NOTE The life of the lower-beam filament represents two-thirds of the total life, the life of the upper-beam filament one-third.

A.4.3 Dual-filament lamps for light signalling equipment

A.4.3.1 General

Life testing shall be carried out for each filament separately. Life testing of the low-wattage filament shall be carried out on filament lamps other than those used for life testing of the high-wattage filament.

A.4.3.2 Filaments for continuous operation

The switching cycle shall be as specified in A.4.1.1.

A.4.3.3 Filaments for intermittent operation

The switching cycle shall be as specified in A.4.1.2.

A.5 Luminous flux and colour maintenance

Tests may be interrupted for determination of the luminous flux and colour maintenance.

Documents
Document Sharing Hub

Full document details: IEC 60810 2017 RLV

Annex B
(normative)

Vibration tests

B.1 General

These tests are designed to ensure that lamps satisfactorily completing this schedule will not be adversely affected by shock and vibration in normal service.

Two levels of test are specified which are referred to as "standard test" and "heavy-duty test" and the appropriate level shall be selected for the intended vehicle usage.

The acceleration levels and frequency spectra used in these tests are based on extensive investigations into the characteristics experienced at lamp mounting positions on a wide range of vehicles and in normal service conditions.

Although the standard test relates to normal vehicle service conditions, investigations have shown that the more arduous conditions given by heavy goods vehicles require lamps of a greater mechanical strength.

Within the constraints of dimensional and photometric specifications, the ultimate strength of an incandescent lamp is limited by the properties of the filament material. These restrict the mechanical stress to which a lamp can be subjected.

Higher vibration levels may impair the performance of lamps.

Two tests methods are specified:

a) a wideband random vibration test (WBR);

b) a narrowband random vibration test (NBR).

The WBR test is the preferred one, as simulation of service conditions can be achieved most accurately by the use of WBR equipment. However, studies have indicated that a relationship exists between WBR and NBR vibrations. For the purpose of this document, both tests are equal for testing motor vehicle lamps to vibration resistance.

Analysis of vibration measurements, taken under transient conditions such as door, boot and bonnet closures, shows compatibility with the significant features of both the WBR and NBR test programmes.

The generally accepted requirements of a fatigue life of 10^7 reversals are encompassed by the schedule in IEC 60068-2-6.

Measurements of vibration and shock characteristics in service reveal frequencies of up to 20 000 Hz.

A vibration level is expressed as acceleration spectral density (ASD). It is the spectral density of an acceleration variable and is given in units of acceleration squared per unit frequency.

ASD spectrum defines the way ASD varies within the frequency range.

The ASD levels at frequencies above 1 000 Hz are, however, so low as to be insignificant, as the resonant frequencies of the critical construction features of most automobile lamps fall within the range of 200 Hz to 800 Hz. This, together with problems in the design of fixtures

AVA Documents
Document Sharing Hub
Full document details: IEC 60810 2017 RLV

suitable for operation at frequencies above this level, has led to the adoption of 1 000 Hz as the maximum limit for the test schedules (excluding half bandwidth).

B.2 Test conditions

B.2.1 General

Figure B.1 details the preferred arrangement of equipment for the testing of lamps of WBR or NBR tests.

In order to be assured of reliable and reproducible test results, the following procedures should be followed.

B.2.2 Mounting (see IEC 60068-2-47)

The lamp caps shall be fastened rigidly to the work holders on the vibration head. This may be achieved by clamping, soldering or embedding. Electrical connection to the lamps shall be made by the use of soldered wires or other means such that electrical connection is ensured during the whole test.

On tests including higher frequencies, it is essential that fixtures are designed in such a way that the propagation path (the distance between lamp and moving coil) is always shorter than the one-quarter wavelength of the velocity of sound in the fixture material.

B.2.3 Measuring points

A measuring point is the position at which measurements are made to ensure that the test requirements are met. The measuring point shall be on the fixture as close as possible to the position at which the lamp is held and the detector shall be rigidly connected to it.

If several lamps are mounted on a single fixture, the measuring point may be related to the fixture generally rather than the lamp fixing points.

The resonant frequency of the fully loaded fixture shall always be higher than the maximum test frequency.

B.2.4 Control point

The signal from the transducer mounted at the measuring point shall be used as a means of maintaining the specified vibration characteristics.

B.2.5 Conditioning

Filament lamps shall be aged for 30 min at test voltage as given in the relevant data sheets of IEC 60809 or in the relevant data sheets of non-replaceable filament lamps. No ageing period is required for discharge lamps, but lamps which fail before starting a vibration test shall be omitted from the test results.

B.2.6 Axis of vibration

Field measurements on vehicles have shown that automobile lamps are usually subjected to greater stresses in the vertical plane than in either of the horizontal planes. It is therefore recommended that a vertical direction of excitation be used for testing with the principal lamp axis and filament(s) horizontal.

Documents
Document Sharing Hub
Full document details: IEC 60810 2017 RLV

B.2.7 WBR test – Basic motion

The basic motion of the control point on the test fixture (see Figure B.1) shall be rectilinear and of a stochastic nature with a normal (Gaussian) distribution of instantaneous acceleration values. Peak values are limited to three times the r.m.s. value as determined by the ASD profile and its frequency range (i.e. "3σ-clipping"). Experience has shown that a peak factor set to 2,3 at the exciter corresponds to a 3 σ test signal at the control point because of filtering by the vibrator (see ISO 5344).

B.3 Test conditions

B.3.1 General

The test voltage for filament lamps shall be in accordance with IEC 60809 or with the specification in the relevant data sheets of non-replaceable filament lamps. For discharge lamps, the conditions of Clause D.2 apply.

The specific vibration test conditions are given as follows (see Tables B.1, B.2, B.3 and B.4):

Table B.1 – Vibration test on motor vehicle lamps – Test conditions

Narrowband random vibration test	Standard test conditions	Table B.2
	Heavy-duty test conditions	Table B.3
Wideband random vibration test	Standard test conditions	Table B.4

B.3.2 Narrowband random vibration tests

Table B.2 – Vibration test on motor vehicle lamps – Standard test conditions (narrowband)

Narrowband random vibration test		
1	**Frequency range**	30 Hz to 1 050 Hz
2	**Bandwidth**	100 Hz
3	**Sweep range**	80 Hz to 1 000 Hz
4	**Sweep rate**	1 octave/min
5	**Sweep duration (full cycle)**	7,3 min
6	**ASD spectrum**	0,12 g^2/Hz (= 3,5 g eff.)
		from 80 Hz to 150 Hz
		0,014 g^2/Hz (= 1,2 g eff.)
		from 150 Hz to 1 000 Hz
7	**Tolerance of the acceleration values**	±1 dB
8	**Test duration**	20 h
9	**Switching cycle**	20 min lit to 10 min unlit
10	**Compressor speed**	10 dB/s

Documents
Document Sharing Hub
Full document details: IEC 60810 2017 RLV