IEC 60811-202

Edition 1.2 2023-11
CONSOLIDATED VERSION

INTERNATIONAL STANDARD

NORME INTERNATIONALE

colour inside

Electric and optical fibre cables – Test methods for non-metallic materials – Part 202: General tests – Measurement of thickness of non-metallic sheath

Câbles électriques et à fibres optiques – Méthodes d'essai pour les matériaux non métalliques – Partie 202: Essais généraux – Mesure de l'épaisseur des gaines non métalliques

IEC 60811-202:2012-03+AMD1:2017-07+AMD2:2023-11 CSV(en-fr)

Documents
Document Sharing Hub

Full document details: IEC 60811-202-2023

THIS PUBLICATION IS COPYRIGHT PROTECTED
Copyright © 2023 IEC, Geneva, Switzerland

All rights reserved. Unless otherwise specified, no part of this publication may be reproduced or utilized in any form or by any means, electronic or mechanical, including photocopying and microfilm, without permission in writing from either IEC or IEC's member National Committee in the country of the requester. If you have any questions about IEC copyright or have an enquiry about obtaining additional rights to this publication, please contact the address below or your local IEC member National Committee for further information.

Droits de reproduction réservés. Sauf indication contraire, aucune partie de cette publication ne peut être reproduite ni utilisée sous quelque forme que ce soit et par aucun procédé, électronique ou mécanique, y compris la photocopie et les microfilms, sans l'accord écrit de l'IEC ou du Comité national de l'IEC du pays du demandeur. Si vous avez des questions sur le copyright de l'IEC ou si vous désirez obtenir des droits supplémentaires sur cette publication, utilisez les coordonnées ci-après ou contactez le Comité national de l'IEC de votre pays de résidence.

IEC Secretariat
3, rue de Varembé
CH-1211 Geneva 20
Switzerland

Tel.: +41 22 919 02 11
info@iec.ch
www.iec.ch

About the IEC
The International Electrotechnical Commission (IEC) is the leading global organization that prepares and publishes International Standards for all electrical, electronic and related technologies.

About IEC publications
The technical content of IEC publications is kept under constant review by the IEC. Please make sure that you have the latest edition, a corrigendum or an amendment might have been published.

IEC publications search - webstore.iec.ch/advsearchform
The advanced search enables to find IEC publications by a variety of criteria (reference number, text, technical committee, …). It also gives information on projects, replaced and withdrawn publications.

IEC Just Published - webstore.iec.ch/justpublished
Stay up to date on all new IEC publications. Just Published details all new publications released. Available online and once a month by email.

IEC Customer Service Centre - webstore.iec.ch/csc
If you wish to give us your feedback on this publication or need further assistance, please contact the Customer Service Centre: sales@iec.ch.

IEC Products & Services Portal - products.iec.ch
Discover our powerful search engine and read freely all the publications previews. With a subscription you will always have access to up to date content tailored to your needs.

Electropedia - www.electropedia.org
The world's leading online dictionary on electrotechnology, containing more than 22 300 terminological entries in English and French, with equivalent terms in 19 additional languages. Also known as the International Electrotechnical Vocabulary (IEV) online.

A propos de l'IEC
La Commission Electrotechnique Internationale (IEC) est la première organisation mondiale qui élabore et publie des Normes internationales pour tout ce qui a trait à l'électricité, à l'électronique et aux technologies apparentées.

A propos des publications IEC
Le contenu technique des publications IEC est constamment revu. Veuillez vous assurer que vous possédez l'édition la plus récente, un corrigendum ou amendement peut avoir été publié.

Recherche de publications IEC - webstore.iec.ch/advsearchform
La recherche avancée permet de trouver des publications IEC en utilisant différents critères (numéro de référence, texte, comité d'études, …). Elle donne aussi des informations sur les projets et les publications remplacées ou retirées.

IEC Just Published - webstore.iec.ch/justpublished
Restez informé sur les nouvelles publications IEC. Just Published détaille les nouvelles publications parues. Disponible en ligne et une fois par mois par email.

Service Clients - webstore.iec.ch/csc
Si vous désirez nous donner des commentaires sur cette publication ou si vous avez des questions contactez-nous: sales@iec.ch.

IEC Products & Services Portal - products.iec.ch
Découvrez notre puissant moteur de recherche et consultez gratuitement tous les aperçus des publications. Avec un abonnement, vous aurez toujours accès à un contenu à jour adapté à vos besoins.

Electropedia - www.electropedia.org
Le premier dictionnaire d'électrotechnologie en ligne au monde, avec plus de 22 300 articles terminologiques en anglais et en français, ainsi que les termes équivalents dans 19 langues additionnelles. Egalement appelé Vocabulaire Electrotechnique International (IEV) en ligne.

Documents
Document Sharing Hub

Full document details: IEC 60811-202-2023

IEC 60811-202

Edition 1.2 2023-11
CONSOLIDATED VERSION

INTERNATIONAL STANDARD

NORME INTERNATIONALE

colour inside

Electric and optical fibre cables – Test methods for non-metallic materials – Part 202: General tests – Measurement of thickness of non-metallic sheath

Câbles électriques et à fibres optiques – Méthodes d'essai pour les matériaux non métalliques – Partie 202: Essais généraux – Mesure de l'épaisseur des gaines non métalliques

INTERNATIONAL
ELECTROTECHNICAL
COMMISSION

COMMISSION
ELECTROTECHNIQUE
INTERNATIONALE

ICS 29.035.01, 29.060.20

ISBN 978-2-8322-7789-8

Warning! Make sure that you obtained this publication from an authorized distributor.
Attention! Veuillez vous assurer que vous avez obtenu cette publication via un distributeur agréé.

AVA Documents
Document Sharing Hub

® Registered trademark of the International Electrotechnical Commission
Marque déposée de la Commission Electrotechnique Internationale

Full document details: IEC 60811-202-2023

Documents
Document Sharing Hub

Full document details: IEC 60811-202-2023

IEC 60811-202

Edition 1.2 2023-11
CONSOLIDATED VERSION

REDLINE VERSION

VERSION REDLINE

colour inside

Electric and optical fibre cables – Test methods for non-metallic materials – Part 202: General tests – Measurement of thickness of non-metallic sheath

Câbles électriques et à fibres optiques – Méthodes d'essai pour les matériaux non métalliques – Partie 202: Essais généraux – Mesure de l'épaisseur des gaines non métalliques

IEC 60811-202:2012-03+AMD1:2017-07+AMD2:2023-11 CSV(en-fr)

Documents
Document Sharing Hub

Full document details: IEC 60811-202-2023

CONTENTS

FOREWORD 3
INTRODUCTION 5
1 Scope 6
2 Normative references 6
3 Terms and definitions 6
4 Test method 6
4.1 General 6
4.2 Measuring equipment 6
4.3 Sample and test piece preparation 7
4.3.1 Sheaths applied over longitudinally regular surfaces 7
4.3.2 Sheaths applied over longitudinally irregular surfaces 7
4.3.3 Sheath applied over corrugated metallic sheaths 7
4.4 Measuring procedure 7
4.5 Evaluation of the measurement results 8
5 Test report 8
Bibliography 13

Figure 1 – Measurement of sheath thickness (circular inner profile) 9
Figure 2 – Measurement of sheath thickness (irregular circular inner profile) 9
Figure 3 – Measurement of sheath thickness (non-circular inner profile) 10
Figure 4 – Measurement of sheath thickness (irregular outer surface) 10
Figure 5 – Measurement of sheath thickness (twin sheathed flat cable) 11
Figure 6 – Measurement of sheath thickness (flat cable with single cores) 12

Documents
Document Sharing Hub
Full document details: IEC 60811-202-2023

INTERNATIONAL ELECTROTECHNICAL COMMISSION

ELECTRIC AND OPTICAL FIBRE CABLES – TEST METHODS FOR NON-METALLIC MATERIALS –

Part 202: General tests – Measurement of thickness of non-metallic sheath

FOREWORD

1) The International Electrotechnical Commission (IEC) is a worldwide organization for standardization comprising all national electrotechnical committees (IEC National Committees). The object of IEC is to promote international co-operation on all questions concerning standardization in the electrical and electronic fields. To this end and in addition to other activities, IEC publishes International Standards, Technical Specifications, Technical Reports, Publicly Available Specifications (PAS) and Guides (hereafter referred to as "IEC Publication(s)"). Their preparation is entrusted to technical committees; any IEC National Committee interested in the subject dealt with may participate in this preparatory work. International, governmental and non-governmental organizations liaising with the IEC also participate in this preparation. IEC collaborates closely with the International Organization for Standardization (ISO) in accordance with conditions determined by agreement between the two organizations.
2) The formal decisions or agreements of IEC on technical matters express, as nearly as possible, an international consensus of opinion on the relevant subjects since each technical committee has representation from all interested IEC National Committees.
3) IEC Publications have the form of recommendations for international use and are accepted by IEC National Committees in that sense. While all reasonable efforts are made to ensure that the technical content of IEC Publications is accurate, IEC cannot be held responsible for the way in which they are used or for any misinterpretation by any end user.
4) In order to promote international uniformity, IEC National Committees undertake to apply IEC Publications transparently to the maximum extent possible in their national and regional publications. Any divergence between any IEC Publication and the corresponding national or regional publication shall be clearly indicated in the latter.
5) IEC itself does not provide any attestation of conformity. Independent certification bodies provide conformity assessment services and, in some areas, access to IEC marks of conformity. IEC is not responsible for any services carried out by independent certification bodies.
6) All users should ensure that they have the latest edition of this publication.
7) No liability shall attach to IEC or its directors, employees, servants or agents including individual experts and members of its technical committees and IEC National Committees for any personal injury, property damage or other damage of any nature whatsoever, whether direct or indirect, or for costs (including legal fees) and expenses arising out of the publication, use of, or reliance upon, this IEC Publication or any other IEC Publications.
8) Attention is drawn to the Normative references cited in this publication. Use of the referenced publications is indispensable for the correct application of this publication.
9) Attention is drawn to the possibility that some of the elements of this IEC Publication may be the subject of patent rights. IEC shall not be held responsible for identifying any or all such patent rights.

This consolidated version of the official IEC Standard and its amendments has been prepared for user convenience.

IEC 60811-202 edition 1.2 contains the first edition (2012-03) [documents 20/1281/FDIS and 20/1330/RVD], its amendment 1 (2017-07) [documents 20/1732/FDIS and 20/1743/RVD] and its amendment 2 (2023-11) [documents 20/2127/FDIS and 20/2137/RVD].

In this Redline version, a vertical line in the margin shows where the technical content is modified by amendments 1 and 2. Additions are in green text, deletions are in strikethrough red text. A separate Final version with all changes accepted is available in this publication.

Documents
Document Sharing Hub

Full document details: IEC 60811-202-2023

International Standard IEC 60811-202 has been prepared by IEC technical committee 20: Electric cables.

There are no specific technical changes with respect to the previous edition, but see the Foreword to IEC 60811-100:2012.

This publication has been drafted in accordance with the ISO/IEC Directives, Part 2.

This part of IEC 60811 shall be read in conjunction with IEC 60811-100.

A list of all the parts in the IEC 60811 series, published under the general title *Electric and optical fibre cables – Test methods for non-metallic materials*, can be found on the IEC website.

The committee has decided that the contents of this document and its amendments will remain unchanged until the stability date indicated on the IEC website under webstore.iec.ch in the data related to the specific document. At this date, the document will be

- reconfirmed,
- withdrawn,
- replaced by a revised edition, or
- amended.

IMPORTANT – The *'colour inside'* logo on the cover page of this publication indicates that it contains colours which are considered to be useful for the correct understanding of its contents. Users should therefore print this document using a colour printer.

Documents
Document Sharing Hub

Full document details: IEC 60811-202-2023

INTRODUCTION

The IEC 60811 series specifies the test methods to be used for testing non-metallic materials of all types of cables. These test methods are intended to be referenced in standards for cable construction and for cable materials.

NOTE 1 Non-metallic materials are typically used for insulating, sheathing, bedding, filling or taping within cables.

NOTE 2 These test methods are accepted as basic and fundamental and have been developed and used over many years principally for the materials in all energy cables. They have also been widely accepted and used for other cables, in particular optical fibre cables, communication and control cables and cables for ships and offshore applications.

Documents
Document Sharing Hub

Full document details: IEC 60811-202-2023

ELECTRIC AND OPTICAL FIBRE CABLES – TEST METHODS FOR NON-METALLIC MATERIALS –

Part 202: General tests – Measurement of thickness of non-metallic sheath

1 Scope

This Part 202 of IEC 60811 gives the methods for measuring thicknesses of non-metallic sheath which apply to the most common types of sheathing compounds (cross-linked, PVC, PE, PP, etc.).

2 Normative references

The following documents, in whole or in part, are normatively referenced in this document and are indispensable for its application. For dated references, only the edition cited applies. For undated references, the latest edition of the referenced document (including any amendments) applies.

IEC 60811-100:2012, *Electric and optical fibre cables – Test methods for non-metallic materials - Part 100: General*

3 Terms and definitions

For the purposes of this document, the terms and definitions given in IEC 60811-100 apply.

4 Test method

4.1 General

This part of IEC 60811 shall be used in conjunction with IEC 60811-100.

~~Unless otherwise specified, tests shall be carried out at room temperature.~~

The measurement of sheath thickness may be required as an individual test, or as a step in the procedure for carrying out other tests, such as the measurement of mechanical properties. The test method applies to the measurement of all sheaths for which thickness limits are specified, for example separation sheaths, as well as external sheaths.

In each case, the method of selecting samples shall be in accordance with the relevant cable standard.

4.2 Measuring equipment

A measuring microscope or a profile projector of at least 10 x magnification or an optical digital image analyser shall be used. ~~All~~ These types of equipment shall allow ~~a~~ the reading of 0,01 mm ~~and~~. An estimated reading to three decimal places shall be made when measuring ~~insulation~~ a sheath with a specified thickness less than 0,5 mm.

For sheaths applied over longitudinally irregular surfaces such as corrugated metallic sheaths, a micrometer having a ball nose radius of 1 mm and allowing a reading of 0,01 mm

AVA Documents
Document Sharing Hub

may be used. This method is suitable only for corrugations having a radius greater than 1 mm.

For sheaths, where the underlying surface is not irregular, the measurement can be made with a micrometer having a ball nose radius of 2,5 mm to 3 mm. In the case of thicknesses greater than 5 mm, and for oversheath material types ST_1, ST_2, ST_3, ST_7, ST_8 and ST_{12}, any of the previously mentioned devices in 4.2, may be used.

In case of doubt, the measuring microscope shall be taken as the reference method.

Attention is drawn to the fact that the measurement device should not deform the oversheath.

4.3 Sample and test piece preparation

4.3.1 Sheaths applied over longitudinally regular surfaces

After all materials, if any, inside and outside the sheath have been removed, each test piece shall be prepared by cutting a thin slice along a plane perpendicular to the longitudinal axis of the cable, using a suitable device.

If the sheath carries an indenting marking, thus giving rise to a local reduction in thickness, the test piece shall include such marking.

4.3.2 Sheaths applied over longitudinally irregular surfaces

Cut a short piece of sheath, perpendicular to the longitudinal axis of the cable, including at least one complete pitch or helix formed by the underlying tape.

If using a ball nose micrometer, the sample may be left whole. If using a microscope or profile projector, the test piece shall be prepared by cutting six thin longitudinal slices (parallel to the cable axis), using a suitable device.

4.3.3 Sheath applied over corrugated metallic sheaths

A sample of complete cable shall be taken, 500 mm from the end of the drum and of sufficient length to include two peaks and two troughs. A reference line shall be drawn on the outer surface of the over sheath, parallel to the axis of the cable. The position of the minimum thickness shall be determined on an annular ring taken from the end of the sample. A strip shall then be cut at this minimum point parallel to the axis of the cable (the previously drawn reference line shall be used to locate this position).

4.4 Measuring procedure

The test piece shall be placed under the measuring equipment with the plane of the cut perpendicular to the optical axis.

a) When the inner profile of the test piece is of circular form, six measurements shall be made radially, each approximately 60°, as shown in Figure 1.

b) If the substantially circular inner surface is not regular or smooth, six measurements shall be made radially at the positions where the sheath is thinnest, as shown in Figure 2.

c) When the inner profile exhibits deep grooves caused by the cores, radial measurements shall be taken at the bottom of each groove, as shown in Figure 3.

   When the number of grooves exceeds six, item b) applies.

d) In order to eliminate the influence of any irregularities on the outer surface, which may be due to the presence of a proofed tape or a ribbed sheath finish, the measurements shall be made as shown in Figure 4.

Documents
Document Sharing Hub

Full document details: IEC 60811-202-2023

e) In the case of sheathed flat cables, measurements shall be taken on lines approximately parallel to the minor axis and on the major axis of the cross-section, at the position of each core, one of the measurements being, however, made at the thinnest place, as shown in Figure 5.

f) For sheathed flat cables composed of up to and including six single cores, measurement shall be taken as shown in Figure 6:

   – on both rounded off sides, along the major axis of the cross-section;

   – on both flat sides, on the first and last core, and at the thinnest place (plus opposite sheath thickness), if this does not coincide with any of the other measurements.

   For cables composed of more than six cores, the above applies but measurements shall also be taken on the middle core, or on one of the two middle cores in the case of an even number of cores.

g) For cables with a sheath applied over longitudinally irregular surfaces, the piece of sheath prepared in accordance with 4.3.2 shall be measured using a ball nose micrometer, to determine the minimum thickness. Alternatively, the six thin longitudinal slices prepared in accordance with 4.3.2 shall be measured optically to determine the minimum thickness.

h) For cables with a sheath applied over a corrugated metal sheath, four measurements shall be taken on the longitudinal strip prepared in accordance with 4.3.3 at, respectively, two peaks and two troughs of the corrugation.

If the sheath carries an indented marking, this shall not be included in the measurements made for the calculation of mean thickness. In such cases, another slice shall be taken and measurements made on areas not affected by the indented marking.

The readings shall be made in millimetres to two decimal places.

In all cases, the thickness at the position of the indented marking shall comply with the minimum requirement specified in the relevant standard.

4.5 Evaluation of the measurement results

The results shall be evaluated as specified in the test requirements of the relevant cable standard.

5 Test report

The test report shall be in accordance with that given in IEC 60811-100.

Documents
Document Sharing Hub

Full document details: IEC 60811-202-2023

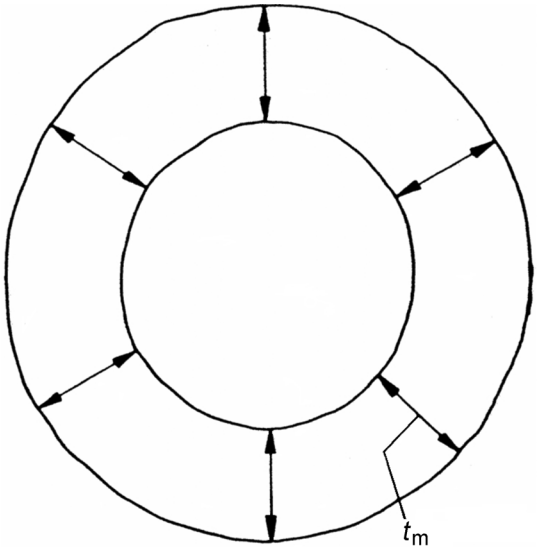

IEC 245/12

Key

t_m minimum thickness

Figure 1 – Measurement of sheath thickness (circular inner profile)

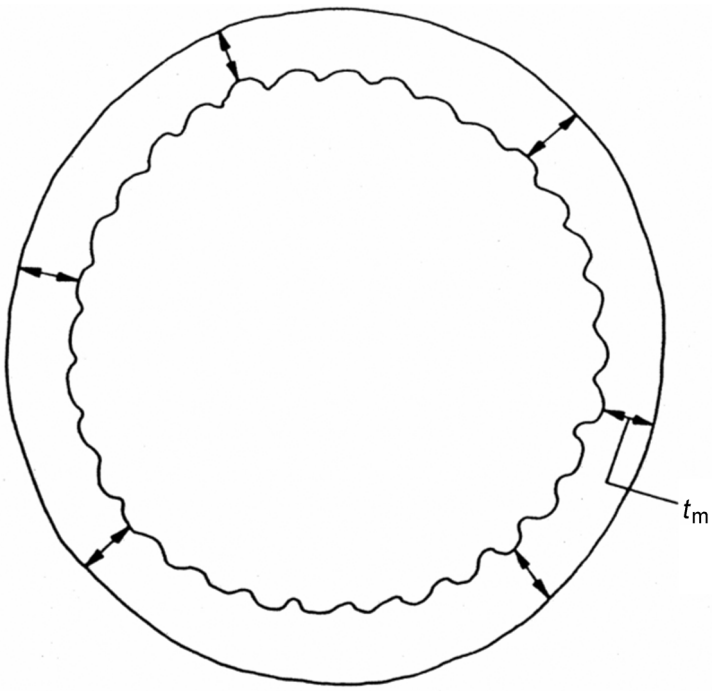

IEC 251/12

Key

t_m minimum thickness

Figure 2 – Measurement of sheath thickness (irregular circular inner profile)

Documents
Document Sharing Hub

Full document details: IEC 60811-202-2023

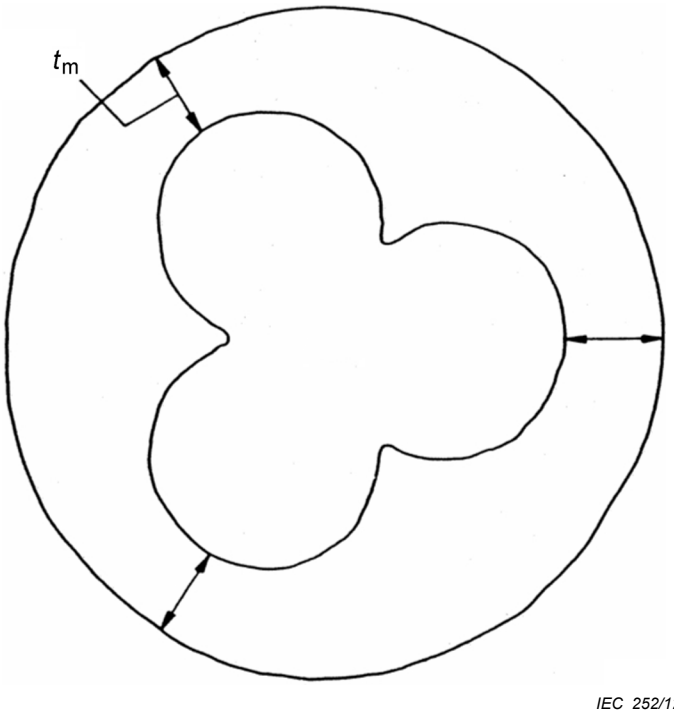

Key

t_m minimum thickness

Figure 3 – Measurement of sheath thickness (non-circular inner profile)

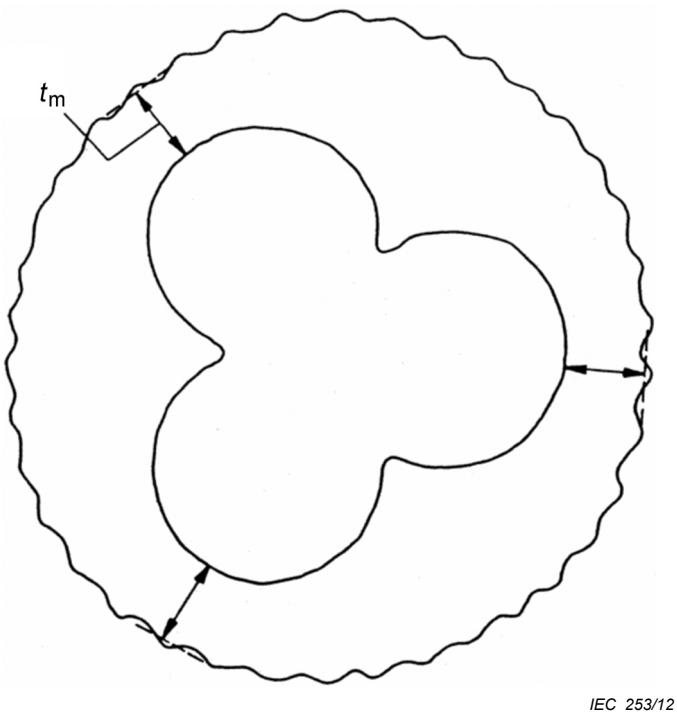

Key

t_m minimum thickness

Figure 4 – Measurement of sheath thickness (irregular outer surface)

Documents
Document Sharing Hub
Full document details: IEC 60811-202-2023

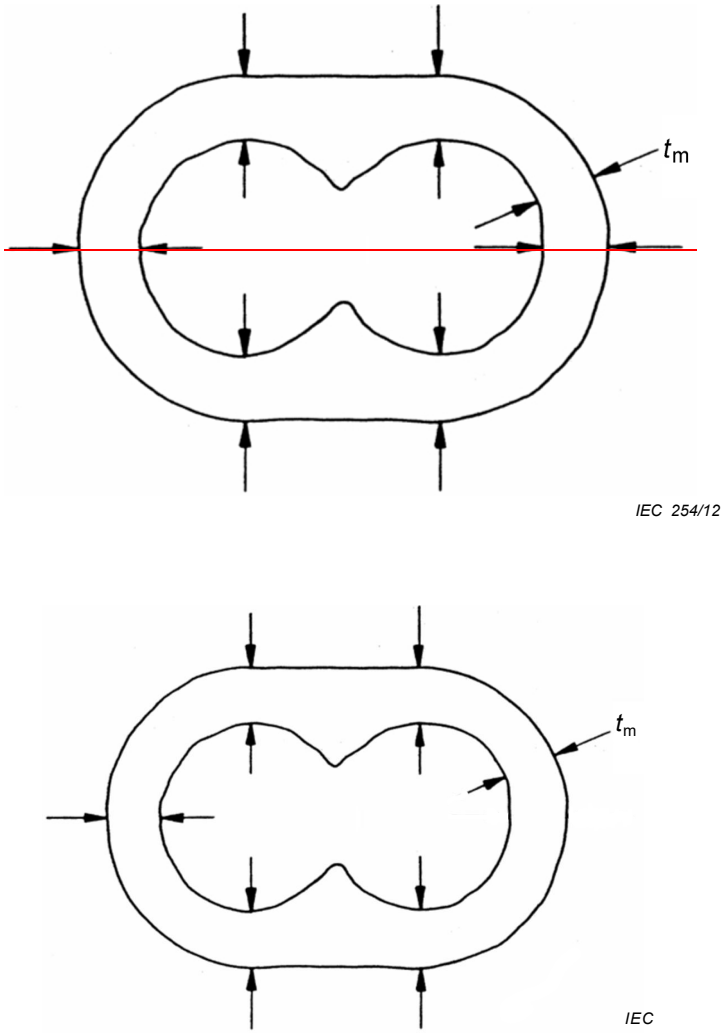

Key

t_m minimum thickness

Figure 5 – Measurement of sheath thickness (twin sheathed flat cable)

Documents
Document Sharing Hub
Full document details: IEC 60811-202-2023

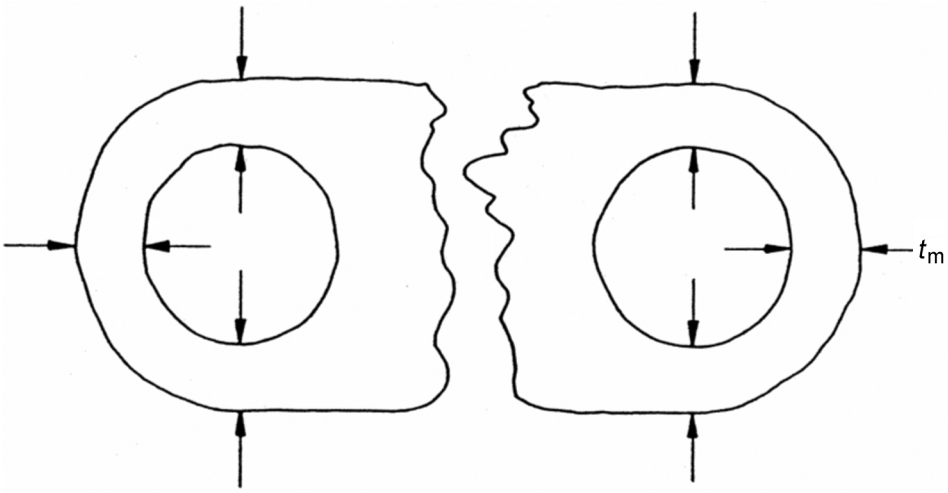

IEC 255/12

Key

t_m minimum thickness

Figure 6 – Measurement of sheath thickness (flat cable with single cores)

Documents
Document Sharing Hub
Full document details: IEC 60811-202-2023

Bibliography

IEC 60811-1-1:1993, *Common test methods for insulating and sheathing materials of electric cables – Part 1: Methods for general application – Section 1: Measurement of thickness and overall dimensions – Tests for determining the mechanical properties*
(withdrawn)

Documents
Document Sharing Hub

Full document details: IEC 60811-202-2023