IEC 60838-2-3

Edition 1.0 2016-05

INTERNATIONAL STANDARD

NORME INTERNATIONALE

Miscellaneous lampholders –
Part 2-3: Particular requirements – Lampholders for double-capped linear LED lamps

Douilles diverses pour lampes –
Partie 2-3: Exigences particulières – Douilles pour lampes LED linéaires à deux culots

IEC 60838-2-3:2016-05(en-fr)

Documents
Document Sharing Hub
Full document details: IEC 60838-2-3 2016

THIS PUBLICATION IS COPYRIGHT PROTECTED
Copyright © 2016 IEC, Geneva, Switzerland

All rights reserved. Unless otherwise specified, no part of this publication may be reproduced or utilized in any form or by any means, electronic or mechanical, including photocopying and microfilm, without permission in writing from either IEC or IEC's member National Committee in the country of the requester. If you have any questions about IEC copyright or have an enquiry about obtaining additional rights to this publication, please contact the address below or your local IEC member National Committee for further information.

Droits de reproduction réservés. Sauf indication contraire, aucune partie de cette publication ne peut être reproduite ni utilisée sous quelque forme que ce soit et par aucun procédé, électronique ou mécanique, y compris la photocopie et les microfilms, sans l'accord écrit de l'IEC ou du Comité national de l'IEC du pays du demandeur. Si vous avez des questions sur le copyright de l'IEC ou si vous désirez obtenir des droits supplémentaires sur cette publication, utilisez les coordonnées ci-après ou contactez le Comité national de l'IEC de votre pays de résidence.

IEC Central Office
3, rue de Varembé
CH-1211 Geneva 20
Switzerland

Tel.: +41 22 919 02 11
Fax: +41 22 919 03 00
info@iec.ch
www.iec.ch

About the IEC
The International Electrotechnical Commission (IEC) is the leading global organization that prepares and publishes International Standards for all electrical, electronic and related technologies.

About IEC publications
The technical content of IEC publications is kept under constant review by the IEC. Please make sure that you have the latest edition, a corrigenda or an amendment might have been published.

IEC Catalogue - webstore.iec.ch/catalogue
The stand-alone application for consulting the entire bibliographical information on IEC International Standards, Technical Specifications, Technical Reports and other documents. Available for PC, Mac OS, Android Tablets and iPad.

IEC publications search - www.iec.ch/searchpub
The advanced search enables to find IEC publications by a variety of criteria (reference number, text, technical committee,…). It also gives information on projects, replaced and withdrawn publications.

IEC Just Published - webstore.iec.ch/justpublished
Stay up to date on all new IEC publications. Just Published details all new publications released. Available online and also once a month by email.

Electropedia - www.electropedia.org
The world's leading online dictionary of electronic and electrical terms containing 20 000 terms and definitions in English and French, with equivalent terms in 15 additional languages. Also known as the International Electrotechnical Vocabulary (IEV) online.

IEC Glossary - std.iec.ch/glossary
65 000 electrotechnical terminology entries in English and French extracted from the Terms and Definitions clause of IEC publications issued since 2002. Some entries have been collected from earlier publications of IEC TC 37, 77, 86 and CISPR.

IEC Customer Service Centre - webstore.iec.ch/csc
If you wish to give us your feedback on this publication or need further assistance, please contact the Customer Service Centre: csc@iec.ch.

A propos de l'IEC
La Commission Electrotechnique Internationale (IEC) est la première organisation mondiale qui élabore et publie des Normes internationales pour tout ce qui a trait à l'électricité, à l'électronique et aux technologies apparentées.

A propos des publications IEC
Le contenu technique des publications IEC est constamment revu. Veuillez vous assurer que vous possédez l'édition la plus récente, un corrigendum ou amendement peut avoir été publié.

Catalogue IEC - webstore.iec.ch/catalogue
Application autonome pour consulter tous les renseignements bibliographiques sur les Normes internationales, Spécifications techniques, Rapports techniques et autres documents de l'IEC. Disponible pour PC, Mac OS, tablettes Android et iPad.

Recherche de publications IEC - www.iec.ch/searchpub
La recherche avancée permet de trouver des publications IEC en utilisant différents critères (numéro de référence, texte, comité d'études,…). Elle donne aussi des informations sur les projets et les publications remplacées ou retirées.

IEC Just Published - webstore.iec.ch/justpublished
Restez informé sur les nouvelles publications IEC. Just Published détaille les nouvelles publications parues. Disponible en ligne et aussi une fois par mois par email.

Electropedia - www.electropedia.org
Le premier dictionnaire en ligne de termes électroniques et électriques. Il contient 20 000 termes et définitions en anglais et en français, ainsi que les termes équivalents dans 15 langues additionnelles. Egalement appelé Vocabulaire Electrotechnique International (IEV) en ligne.

Glossaire IEC - std.iec.ch/glossary
65 000 entrées terminologiques électrotechniques, en anglais et en français, extraites des articles Termes et Définitions des publications IEC parues depuis 2002. Plus certaines entrées antérieures extraites des publications des CE 37, 77, 86 et CISPR de l'IEC.

Service Clients - webstore.iec.ch/csc
Si vous désirez nous donner des commentaires sur cette publication ou si vous avez des questions contactez-nous: csc@iec.ch.

Documents
Document Sharing Hub

Full document details: IEC 60838-2-3 2016

IEC 60838-2-3

Edition 1.0 2016-05

INTERNATIONAL STANDARD

NORME INTERNATIONALE

Miscellaneous lampholders –
Part 2-3: Particular requirements – Lampholders for double-capped linear LED lamps

Douilles diverses pour lampes –
Partie 2-3: Exigences particulières – Douilles pour lampes LED linéaires à deux culots

INTERNATIONAL
ELECTROTECHNICAL
COMMISSION

COMMISSION
ELECTROTECHNIQUE
INTERNATIONALE

ICS 29.140.10

ISBN 978-2-8322-3357-3

Warning! Make sure that you obtained this publication from an authorized distributor.
Attention! Veuillez vous assurer que vous avez obtenu cette publication via un distributeur agréé.

AVA Documents
Document Sharing Hub

® Registered trademark of the International Electrotechnical Commission
Marque déposée de la Commission Electrotechnique Internationale

Full document details: IEC 60838-2-3 2016

CONTENTS

FOREWORD ... 3
1 Scope ... 5
2 Normative references ... 5
3 Terms and definitions ... 5
4 General requirements ... 6
5 General conditions for tests ... 6
6 Classification ... 9
7 Marking ... 9
8 Protection against electric shock ... 10
9 Terminals ... 10
10 Provision for earthing ... 10
11 Construction ... 10
12 Moisture resistance, insulation resistance and electric strength ... 13
13 Mechanical strength ... 13
14 Screws, current-carrying parts and connections ... 13
15 Creepage distances and clearances ... 13
16 Endurance ... 13
17 Resistance to heat and fire ... 13
18 Resistance to excessive residual stresses (season cracking) and to rusting ... 13
Annex A (normative) Lampholders covered by this standard ... 14
Annex B (normative) Test probes for checking gasket sleeves on lampholders for higher IP protection ... 15
Annex C (informative) Explanatory details for the installation of lampholders according to 11.1 ... 16
Bibliography ... 17

Figure 1 – Mounting sheet ... 7
Figure 2 – Fixture for the testing of lampholder flexibility ... 8
Figure 3 – Test cap GX16t-5 ... 9
Figure 4 – Mounting jig for the testing of lampholders ... 12
Figure B.1 – Test probes for checking gasket sleeves ... 15
Figure C.1 – Examples of lampholders ... 16

Documents
Document Sharing Hub

Full document details: IEC 60838-2-3 2016

INTERNATIONAL ELECTROTECHNICAL COMMISSION

MISCELLANEOUS LAMPHOLDERS –

Part 2-3: Particular requirements – Lampholders for double-capped linear LED lamps

FOREWORD

1) The International Electrotechnical Commission (IEC) is a worldwide organization for standardization comprising all national electrotechnical committees (IEC National Committees). The object of IEC is to promote international co-operation on all questions concerning standardization in the electrical and electronic fields. To this end and in addition to other activities, IEC publishes International Standards, Technical Specifications, Technical Reports, Publicly Available Specifications (PAS) and Guides (hereafter referred to as "IEC Publication(s)"). Their preparation is entrusted to technical committees; any IEC National Committee interested in the subject dealt with may participate in this preparatory work. International, governmental and non-governmental organizations liaising with the IEC also participate in this preparation. IEC collaborates closely with the International Organization for Standardization (ISO) in accordance with conditions determined by agreement between the two organizations.
2) The formal decisions or agreements of IEC on technical matters express, as nearly as possible, an international consensus of opinion on the relevant subjects since each technical committee has representation from all interested IEC National Committees.
3) IEC Publications have the form of recommendations for international use and are accepted by IEC National Committees in that sense. While all reasonable efforts are made to ensure that the technical content of IEC Publications is accurate, IEC cannot be held responsible for the way in which they are used or for any misinterpretation by any end user.
4) In order to promote international uniformity, IEC National Committees undertake to apply IEC Publications transparently to the maximum extent possible in their national and regional publications. Any divergence between any IEC Publication and the corresponding national or regional publication shall be clearly indicated in the latter.
5) IEC itself does not provide any attestation of conformity. Independent certification bodies provide conformity assessment services and, in some areas, access to IEC marks of conformity. IEC is not responsible for any services carried out by independent certification bodies.
6) All users should ensure that they have the latest edition of this publication.
7) No liability shall attach to IEC or its directors, employees, servants or agents including individual experts and members of its technical committees and IEC National Committees for any personal injury, property damage or other damage of any nature whatsoever, whether direct or indirect, or for costs (including legal fees) and expenses arising out of the publication, use of, or reliance upon, this IEC Publication or any other IEC Publications.
8) Attention is drawn to the Normative references cited in this publication. Use of the referenced publications is indispensable for the correct application of this publication.
9) Attention is drawn to the possibility that some of the elements of this IEC Publication may be the subject of patent rights. IEC shall not be held responsible for identifying any or all such patent rights.

International Standard IEC 60838-2-3 has been prepared by subcommittee 34B: Lamp caps and holders, of IEC technical committee 34: Lamps and related equipment.

The text of this standard is based on the following documents:

FDIS	Report on voting
34B/1851/FDIS	34B/1857/RVD

Full information on the voting for the approval of this standard can be found in the report on voting indicated in the above table.

This publication has been drafted in accordance with the ISO/IEC Directives, Part 2.

Documents
Document Sharing Hub

Full document details: IEC 60838-2-3 2016

This Part 2-3 is to be used in conjunction with the latest edition of IEC 60838-1 and its amendments. It was established on the basis of the fifth edition (2016) of that standard.

A list of all parts in the IEC 60838 series, published under the general title *Miscellaneous lampholders*, can be found on the IEC website.

In this standard the following print types are used:

– *test specifications and compliance statements: in italic type*;

– NOTES: in small roman type.

The committee has decided that the contents of this publication will remain unchanged until the stability date indicated on the IEC website under "http://webstore.iec.ch" in the data related to the specific publication. At this date, the publication will be

- reconfirmed,
- withdrawn,
- replaced by a revised edition, or
- amended.

Documents
Document Sharing Hub

Full document details: IEC 60838-2-3 2016

MISCELLANEOUS LAMPHOLDERS –

Part 2-3: Particular requirements – Lampholders for double-capped linear LED lamps

1 Scope

This part of IEC 60838-2 applies to lampholders for double-capped linear LED lamps intended for building-in (to be used for general lighting service and with caps as listed in Annex A). Lampholders within the scope of this standard do not include heat management.

Double-capped linear LED lamps can also be used with lampholders originally been designated for other technologies. The requirementsfor these lampholders are covered by separate standards.

2 Normative references

The following documents, in whole or in part, are normatively referenced in this document and are indispensable for its application. For dated references, only the edition cited applies. For undated references, the latest edition of the referenced document (including any amendments) applies.

Clause 2 of IEC 60838-1 applies, together with the following additions.

IEC 60061-2, *Lamp caps and holders together with gauges for the control of interchangeability and safety – Part 2: Lampholders*

IEC 60061-3, *Lamp caps and holders together with gauges for the control of interchangeability and safety – Part 3: Gauges*

IEC 60838-1, *Miscellaneous lamp holders – Part 1: General requirements and tests*

IEC 62504, *General lighting – Light emitting diode (LED) products and related equipment – Terms and definitions*

3 Terms and definitions

For the purposes of this document, the terms and definitions given in IEC 60838-1 and in IEC 62504, as well as the following apply.

3.1
independent lampholder
lampholder so designed that it can be mounted separately from a luminaire, while at the same time providing all the necessary protection according to its classification and marking

[SOURCE: IEC 60238:2004, 2.5]

3.2
flexible lampholder for linear double-capped LED lamp
flexible lampholder
lampholder in which the base of each holder is rigidly mounted in the luminaire but which has one or both of the lampholders so designed as to allow axial movement of the contacts

Documents
Document Sharing Hub

Note 1 to entry: This note applies to the French language only.

[SOURCE: IEC 60400:2008 and IEC 60400:2008/AMD1:2011, 2.3, modified]

3.3
inflexible lampholder for linear double-capped LED lamp
inflexible lampholder
lampholder intended for rigid mounting and in which no axial movement of the contacts is provided or is needed, either for the insertion and removal of the lamp or as compensation for variation in lamp lengths

[SOURCE: IEC 60400:2008, 2.4, modified]

3.4
flexibly mounted lampholder for linear double-capped LED lamp
flexibly mounted lampholder
pair of lampholders which do not in themselves provide for any axial movement of the contact system but which are intended to be mounted in a luminaire in a specified manner so that the combination provides the necessary axial movement of the contact system

[SOURCE: IEC 60400:2008, 2.5, modified]

4 General requirements

The requirements of Clause 4 of IEC 60838-1 apply.

5 General conditions for tests

The requirements of Clause 5 of IEC 60838-1 apply together with the following additions.

5.1 In the case of flexible and inflexible lampholders (see 3.2 and 3.3 respectively), the specimens are mounted on two pairs of mounting sheets as specified in Figure 1.

One pair of holders is mounted so as to represent the minimum mounting distance for this pair of holders according to the manufacturer's mounting instructions; the other pair is mounted at the maximum distance. The matching mounting sheets are marked.

Together with these specimens, the manufacturer's mounting instructions (see 8.1) shall be supplied.

Documents
Document Sharing Hub

Full document details: IEC 60838-2-3 2016

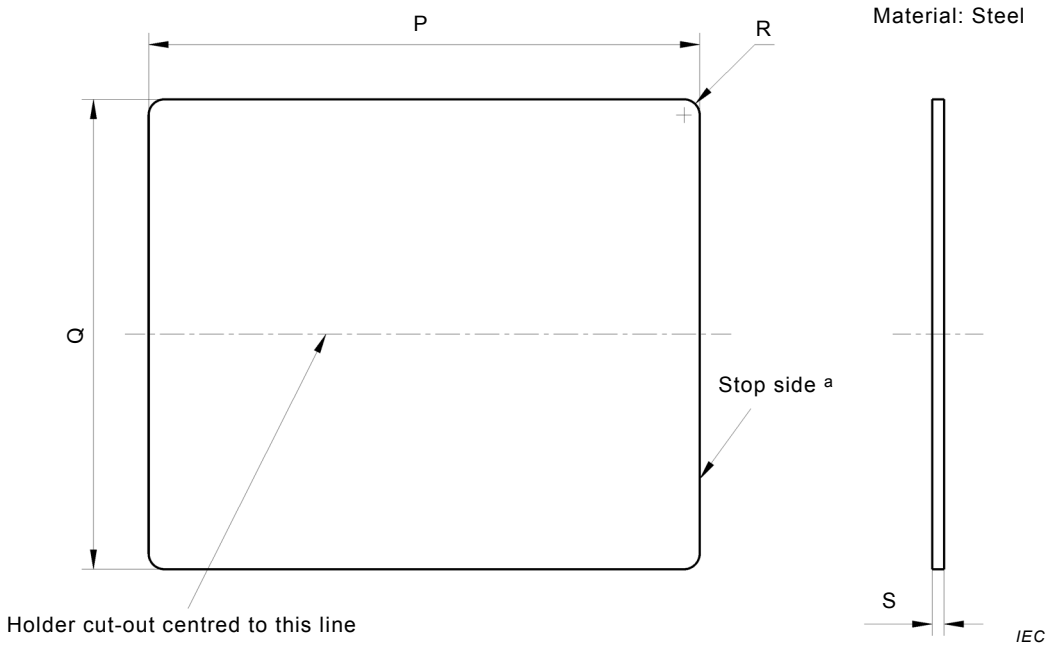

Key

[a] This side shall be marked.

For holders requiring a vertical mounting surface, a steel angle shall be added to the mounting sheet.

When applying a force of 50 N to this angle in the height and in the direction of the lampholder axis, the lampholder shall not deviate by more than 0,2 mm from its original position.

The drawing is intended only to illustrate the essential dimensions of the mounting sheet.

Reference	**Dimension** mm	**Tolerance** mm
P	70	±0,1
Q	60	±0,1
R	2	±0,5
S [b]	1,0	±0,05
[b] If the holder is designed for a lower material thickness, only the area required for the mounting of the holder is reduced to this specific value.		

Figure 1 – Mounting sheet

In case of doubt as to whether a lampholder GX16t-5 provides the required axial movement of the contacts, a test with the device shown in Figure 2 may be carried out.

Documents
Document Sharing Hub
Full document details: IEC 60838-2-3 2016

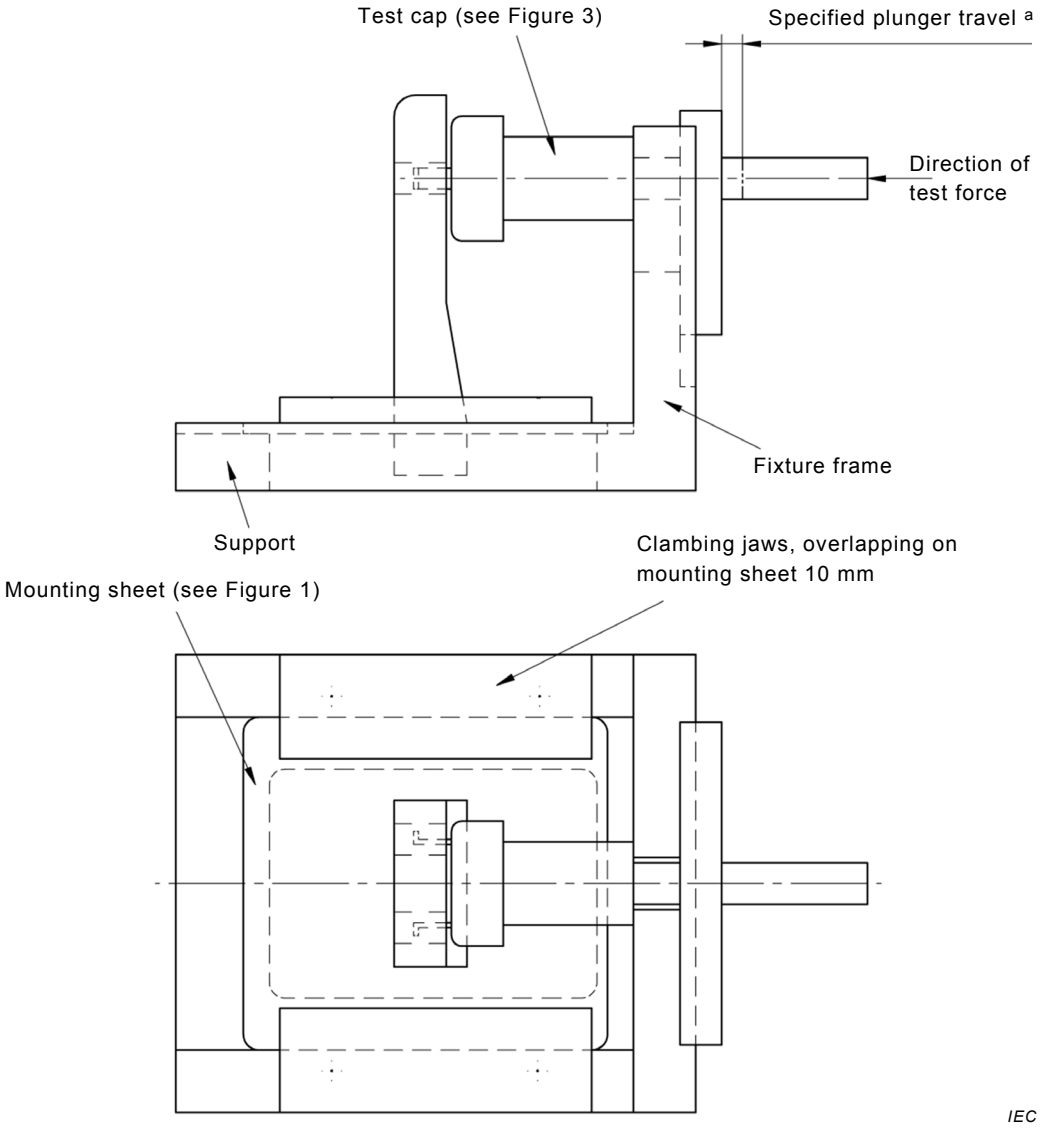

Key

The fixture shown is intended for testing single lampholders. For testing twin-lampholders, modifications will be necessary.

PURPOSE: To check, in case of doubt, whether the lampholder shall be considered as a flexible or an inflexible one.

TESTING: The holder, mounted on the mounting sheet, is placed on the support and the test cap is inserted into the holder. The mounting sheet is then moved in such a way that the test cap[b] is fixed between holder and fixture frame without clearance. In this position the mounting sheet is fixed by the use of the clamping jaws. A force is applied via the plunger to the test cap until the specified plunger travel[a] is achieved. The force required shall not exceed 30 N for lampholders GX16t-5. This procedure is repeated 10 times.

After this test, no clearance shall exist between test cap and fixture frame, nor between test cap and holder. If the holder complies, it is deemed to be a flexible lampholder; if not it is an inflexible one.

[a] The plunger travel is equal to the required minimum axial contact movement, which is:

– for a pair of holders: 3 mm (under consideration) + mounting tolerance, according to the manufacturer's instructions (see 7.1 of IEC 60838-1).

If the combined pair of holders consists of two flexible holders, each holder has to provide half of the required contact movement.

[b] The relevant test caps are described in Figure 3.

Figure 2 – Fixture for the testing of lampholder flexibility

Documents
Document Sharing Hub
Full document details: IEC 60838-2-3 2016

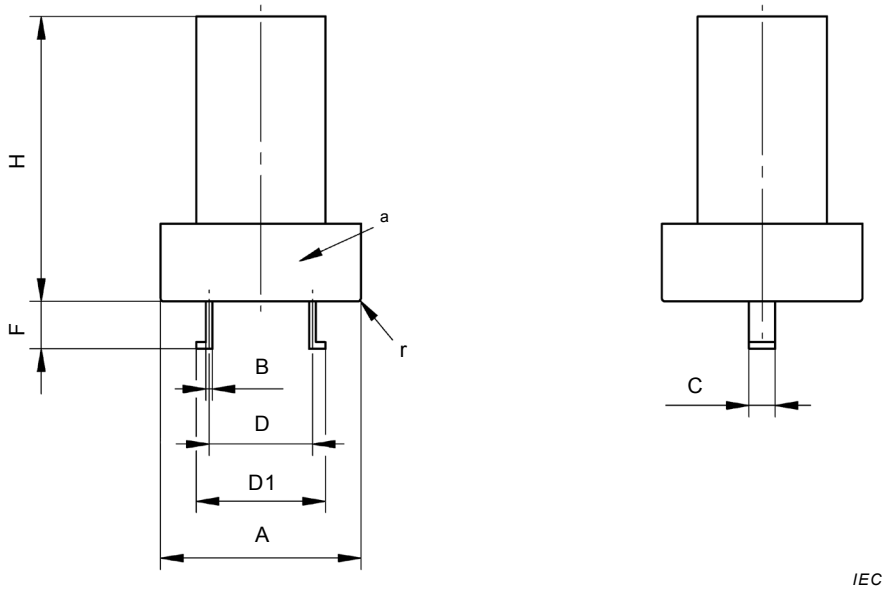

Key

[a] This part of the gauge and the cap pins shall be of hardened steel.

Reference	Dimension mm	Tolerance mm
A [b]	26,5	±0,1
B	1,0	±0,02
C	4,0	±0,02
D	16,00	±0,05
D1	20,0	±0,05
F	7,31	±0,05
H [b]	35,0	±0,1
r [b]	0,5	+0,3 –0,0
[b] These test caps differ from the test caps used in Clause 13 by the material and the additional dimensions A, H and r.		

Figure 3 – Test cap GX16t-5

6 Classification

The requirements of Clause 6 of IEC 60838-1 apply together with the following additions.

6.1 According to the flexibility for axial movement of lamp length:

– flexible lampholders;
– inflexible lampholders.

7 Marking

The requirements of Clause 7 of IEC 60838-1 apply together with the following additions.

Documents
Document Sharing Hub
Full document details: IEC 60838-2-3 2016

7.1 The instructions supplied by the holder manufacturer or responsible vendor in order to ensure correct mounting and operation of a pair of holders for linear double-capped LED lamps shall contain at least the following information:

– method of mounting: for flexibly mounted holders, it shall be clearly stated whether both or only one of the methods of mounting is intended;

NOTE A pair of flexible holders could consist of two holders each having a spring or one holder having a spring and a second without a spring. The two methods of mounting are with and without a separate spring for flexible mounting.

– mounting distance, with tolerance or reference to standard sheets;
– which holders shall be used as a pair;
– required mounting plate thickness, if the holder is designed for screwless mounting.

The above information may be part of the manufacturer's or responsible vendor's catalogue.

Compliance is checked by inspection.

8 Protection against electric shock

The requirements of Clause 8 of IEC 60838-1 apply together with the following additions.

8.1 Protection against electric shock shall be ensured when a lamp is inserted into a lampholder at an angle not greater than 5° from the axis of the normal inserted position of the lamp.

Lampholders incorporating a rotating part shall be tested with this part in the position of normal lamp insertion.

NOTE 1 For further information see Figure C.1 d).

Compliance is checked as follows:

– *by means of the gauge B as per IEC 60061-3, standard sheet 7006-183B (Double ended "GO" gauges for a combined pair of lampholders) and the standard test finger specified in IEC 60529.*

NOTE 2 To prevent electrical contact between the test finger and the metal body of gauge II, the "cap" face of the gauge is covered with insulating material, having a thickness not exceeding 0,1 mm.

9 Terminals

The requirements of Clause 9 of IEC 60838-1 apply.

10 Provision for earthing

The requirements of Clause 10 of IEC 60838-1 apply.

11 Construction

The requirements of Clause 11 of IEC 60838-1 apply together with the following additions.

11.1 In case of absence of any additional lamp support (e.g. gasket sleeves for IP rated lampholders), only lampholder incorporating a rotating part are allowed, no side entry lampholder is permitted. This requirement does not apply to single contact lampholders.

AVA Documents
Document Sharing Hub

Full document details: IEC 60838-2-3 2016