IEC 60851-4

Edition 3.0 2016-07

INTERNATIONAL STANDARD

NORME INTERNATIONALE

Winding wires – Test methods – Part 4: Chemical properties

Fils de bobinage – Méthodes d'essai – Partie 4: Propriétés chimiques

IEC 60851-4:2016-07(en-fr)

Documents
Document Sharing Hub

Full document details: IEC 60851-4 2016

THIS PUBLICATION IS COPYRIGHT PROTECTED
Copyright © 2016 IEC, Geneva, Switzerland

All rights reserved. Unless otherwise specified, no part of this publication may be reproduced or utilized in any form or by any means, electronic or mechanical, including photocopying and microfilm, without permission in writing from either IEC or IEC's member National Committee in the country of the requester. If you have any questions about IEC copyright or have an enquiry about obtaining additional rights to this publication, please contact the address below or your local IEC member National Committee for further information.

Droits de reproduction réservés. Sauf indication contraire, aucune partie de cette publication ne peut être reproduite ni utilisée sous quelque forme que ce soit et par aucun procédé, électronique ou mécanique, y compris la photocopie et les microfilms, sans l'accord écrit de l'IEC ou du Comité national de l'IEC du pays du demandeur. Si vous avez des questions sur le copyright de l'IEC ou si vous désirez obtenir des droits supplémentaires sur cette publication, utilisez les coordonnées ci-après ou contactez le Comité national de l'IEC de votre pays de résidence.

IEC Central Office
3, rue de Varembé
CH-1211 Geneva 20
Switzerland

Tel.: +41 22 919 02 11
Fax: +41 22 919 03 00
info@iec.ch
www.iec.ch

About the IEC
The International Electrotechnical Commission (IEC) is the leading global organization that prepares and publishes International Standards for all electrical, electronic and related technologies.

About IEC publications
The technical content of IEC publications is kept under constant review by the IEC. Please make sure that you have the latest edition, a corrigenda or an amendment might have been published.

IEC Catalogue - webstore.iec.ch/catalogue
The stand-alone application for consulting the entire bibliographical information on IEC International Standards, Technical Specifications, Technical Reports and other documents. Available for PC, Mac OS, Android Tablets and iPad.

IEC publications search - www.iec.ch/searchpub
The advanced search enables to find IEC publications by a variety of criteria (reference number, text, technical committee,…). It also gives information on projects, replaced and withdrawn publications.

IEC Just Published - webstore.iec.ch/justpublished
Stay up to date on all new IEC publications. Just Published details all new publications released. Available online and also once a month by email.

Electropedia - www.electropedia.org
The world's leading online dictionary of electronic and electrical terms containing 20 000 terms and definitions in English and French, with equivalent terms in 15 additional languages. Also known as the International Electrotechnical Vocabulary (IEV) online.

IEC Glossary - std.iec.ch/glossary
65 000 electrotechnical terminology entries in English and French extracted from the Terms and Definitions clause of IEC publications issued since 2002. Some entries have been collected from earlier publications of IEC TC 37, 77, 86 and CISPR.

IEC Customer Service Centre - webstore.iec.ch/csc
If you wish to give us your feedback on this publication or need further assistance, please contact the Customer Service Centre: csc@iec.ch.

A propos de l'IEC
La Commission Electrotechnique Internationale (IEC) est la première organisation mondiale qui élabore et publie des Normes internationales pour tout ce qui a trait à l'électricité, à l'électronique et aux technologies apparentées.

A propos des publications IEC
Le contenu technique des publications IEC est constamment revu. Veuillez vous assurer que vous possédez l'édition la plus récente, un corrigendum ou amendement peut avoir été publié.

Catalogue IEC - webstore.iec.ch/catalogue
Application autonome pour consulter tous les renseignements bibliographiques sur les Normes internationales, Spécifications techniques, Rapports techniques et autres documents de l'IEC. Disponible pour PC, Mac OS, tablettes Android et iPad.

Recherche de publications IEC - www.iec.ch/searchpub
La recherche avancée permet de trouver des publications IEC en utilisant différents critères (numéro de référence, texte, comité d'études,…). Elle donne aussi des informations sur les projets et les publications remplacées ou retirées.

IEC Just Published - webstore.iec.ch/justpublished
Restez informé sur les nouvelles publications IEC. Just Published détaille les nouvelles publications parues. Disponible en ligne et aussi une fois par mois par email.

Electropedia - www.electropedia.org
Le premier dictionnaire en ligne de termes électroniques et électriques. Il contient 20 000 termes et définitions en anglais et en français, ainsi que les termes équivalents dans 15 langues additionnelles. Egalement appelé Vocabulaire Electrotechnique International (IEV) en ligne.

Glossaire IEC - std.iec.ch/glossary
65 000 entrées terminologiques électrotechniques, en anglais et en français, extraites des articles Termes et Définitions des publications IEC parues depuis 2002. Plus certaines entrées antérieures extraites des publications des CE 37, 77, 86 et CISPR de l'IEC.

Service Clients - webstore.iec.ch/csc
Si vous désirez nous donner des commentaires sur cette publication ou si vous avez des questions contactez-nous: csc@iec.ch.

Documents
Document Sharing Hub

Full document details: IEC 60851-4 2016

IEC 60851-4

Edition 3.0 2016-07

INTERNATIONAL STANDARD

NORME INTERNATIONALE

Winding wires – Test methods – Part 4: Chemical properties

Fils de bobinage – Méthodes d'essai – Partie 4: Propriétés chimiques

INTERNATIONAL
ELECTROTECHNICAL
COMMISSION

COMMISSION
ELECTROTECHNIQUE
INTERNATIONALE

ICS 29.060.10

ISBN 978-2-8322-3512-6

Warning! Make sure that you obtained this publication from an authorized distributor.
Attention! Veuillez vous assurer que vous avez obtenu cette publication via un distributeur agréé.

AVA Documents
Document Sharing Hub

® Registered trademark of the International Electrotechnical Commission
Marque déposée de la Commission Electrotechnique Internationale

Full document details: IEC 60851-4 2016

CONTENTS

FOREWORD....4
INTRODUCTION....6
1 Scope....7
2 Normative references....7
3 Test 12: Resistance to solvents....7
3.1 General....7
3.2 Equipment....8
3.3 Procedure....8
4 16: Resistance to refrigerants....9
4.1 General....9
4.2 Extraction....9
4.2.1 Principle....9
4.2.2 Equipment....9
4.2.3 Specimen....11
4.2.4 Procedure....11
4.2.5 Result....12
4.3 Breakdown voltage....12
4.3.1 Principle....12
4.3.2 Procedure....12
4.3.3 Result....13
5 Test 17: Solderability....13
5.1 General....13
5.2 Equipment....13
5.3 Procedure....14
6 Test 20: Resistance to hydrolysis and to transformer oil....14
6.1 General....14
6.2 Round wire....15
6.2.1 Equipment....15
6.2.2 Specimens....15
6.2.3 Procedure....15
6.3 Rectangular wire....16
6.3.1 Equipment....16
6.3.2 Specimens....16
6.3.3 Procedure....16
Annex A (informative) Alternative refrigerants to monochlorodifluoromethane....18
Bibliography....19

Figure 1 – Pencil and specimen for solvent test....8
Figure 2 – Refrigerant extractable test siphon cup....10
Figure 3 – Condenser coil....11
Figure 4 – Example of carrier for solderability test....14

Table 1 – Pencil hardness....9
Table 2 – Volume of components....16

AVA Documents
Document Sharing Hub

Full document details: IEC 60851-4 2016

Table A.1 – Alternative refrigerants to R 22 18

Documents
Document Sharing Hub

Full document details: IEC 60851-4 2016

INTERNATIONAL ELECTROTECHNICAL COMMISSION

WINDING WIRES – TEST METHODS –

Part 4: Chemical properties

FOREWORD

1) The International Electrotechnical Commission (IEC) is a worldwide organization for standardization comprising all national electrotechnical committees (IEC National Committees). The object of IEC is to promote international co-operation on all questions concerning standardization in the electrical and electronic fields. To this end and in addition to other activities, IEC publishes International Standards, Technical Specifications, Technical Reports, Publicly Available Specifications (PAS) and Guides (hereafter referred to as "IEC Publication(s)"). Their preparation is entrusted to technical committees; any IEC National Committee interested in the subject dealt with may participate in this preparatory work. International, governmental and non-governmental organizations liaising with the IEC also participate in this preparation. IEC collaborates closely with the International Organization for Standardization (ISO) in accordance with conditions determined by agreement between the two organizations.
2) The formal decisions or agreements of IEC on technical matters express, as nearly as possible, an international consensus of opinion on the relevant subjects since each technical committee has representation from all interested IEC National Committees.
3) IEC Publications have the form of recommendations for international use and are accepted by IEC National Committees in that sense. While all reasonable efforts are made to ensure that the technical content of IEC Publications is accurate, IEC cannot be held responsible for the way in which they are used or for any misinterpretation by any end user.
4) In order to promote international uniformity, IEC National Committees undertake to apply IEC Publications transparently to the maximum extent possible in their national and regional publications. Any divergence between any IEC Publication and the corresponding national or regional publication shall be clearly indicated in the latter.
5) IEC itself does not provide any attestation of conformity. Independent certification bodies provide conformity assessment services and, in some areas, access to IEC marks of conformity. IEC is not responsible for any services carried out by independent certification bodies.
6) All users should ensure that they have the latest edition of this publication.
7) No liability shall attach to IEC or its directors, employees, servants or agents including individual experts and members of its technical committees and IEC National Committees for any personal injury, property damage or other damage of any nature whatsoever, whether direct or indirect, or for costs (including legal fees) and expenses arising out of the publication, use of, or reliance upon, this IEC Publication or any other IEC Publications.
8) Attention is drawn to the Normative references cited in this publication. Use of the referenced publications is indispensable for the correct application of this publication.
9) Attention is drawn to the possibility that some of the elements of this IEC Publication may be the subject of patent rights. IEC shall not be held responsible for identifying any or all such patent rights.

International Standard IEC 60851-4 has been prepared by IEC technical committee 55: Winding wires.

This third edition cancels and replaces the second edition published in 1996, Amendment 1:1997 and Amendment 2:2005. This edition constitutes a technical revision.

This edition includes the following significant technical changes with respect to the previous edition:

a) revision of Test 16: Resistance to refrigerants;
b) revision of Test 17: Solderability;
c) new Annex A for alternative refrigerants to monochlorodifluoromethane (R 22).

Documents
Document Sharing Hub

Full document details: IEC 60851-4 2016

The text of this standard is based on the following documents:

FDIS	Report on voting
55/1578/FDIS	55/1580/RVD

Full information on the voting for the approval of this standard can be found in the report on voting indicated in the above table.

This publication has been drafted in accordance with the ISO/IEC Directives, Part 2.

A list of all the parts in the IEC 60851 series, published under the general title *Winding Wires – Test methods*, can be found on the IEC website.

The committee has decided that the contents of this publication will remain unchanged until the stability date indicated on the IEC website under "http://webstore.iec.ch" in the data related to the specific publication. At this date, the publication will be

- reconfirmed,
- withdrawn,
- replaced by a revised edition, or
- amended.

Documents
Document Sharing Hub

Full document details: IEC 60851-4 2016

INTRODUCTION

The IEC 60851 series is part of a group of International Standards which define insulated wires used for windings in electrical equipment:

1) IEC 60851 series, *Winding wires – Test methods;*
2) IEC 60317 series, *Specifications for particular types of winding wires;*
3) IEC 60264 series, *Packaging of winding wires.*

Documents
Document Sharing Hub

Full document details: IEC 60851-4 2016

WINDING WIRES – TEST METHODS –

Part 4: Chemical properties

1 Scope

This part of IEC 60851 specifies the following chemical properties tests:

- Test 12: Resistance to solvents;
- Test 16: Resistance to refrigerants;
- Test 17: Solderability;
- Test 20: Resistance to transformer oil.

For definitions, general notes on methods of test and the complete series of methods of test for winding wires see IEC 60851-1.

2 Normative references

The following documents, in whole or in part, are normatively referenced in this document and are indispensable for its application. For dated references, only the edition cited applies. For undated references, the latest edition of the referenced document (including any amendments) applies.

IEC 60296, *Fluids for electrotechnical applications – Unused mineral insulating oils for transformers and switchgear*

IEC 60554-1:1977, *Specification for cellulosic papers for electrical purposes – Part 1: Definitions and general requirements*

IEC 60851-1, *Winding wires – Test methods – Part 1: General*

IEC 60851-3:2009, *Winding wires – Test methods – Part 3: Mechanical properties*

IEC 60851-5:2008, *Winding wires – Test methods – Part 5: Electrical properties*

ISO 9453, *Soft solder alloys – Chemical compositions and forms*

3 Test 12: Resistance to solvents

3.1 General

This test is applicable to enamelled round wire with a nominal conductor diameter over 0,250 mm and to enamelled rectangular wire.

The test is not suitable for round wires with a nominal conductor diameter up to and including 0,250 mm.

Resistance to solvents is expressed by the pencil hardness of the wire after solvent treatment.

Documents
Document Sharing Hub

Full document details: IEC 60851-4 2016

3.2 Equipment

The following solvents shall be used:

- standard solvent as specified below, or
- solvent as agreed between purchaser and supplier.

The standard solvent shall be a mixture of:

- 60 % by volume white spirit with maximum aromatic content of 18 %;
- 30 % by volume xylene;
- 10 % by volume butanol.

The pencil to be used shall be a lead pencil of the hardness specified in the relevant standard. Before each test, the point of the pencil shall be sharpened with a smooth-cut file to form an angle of 60° symmetrical about the axis of the lead according to Figure 1.

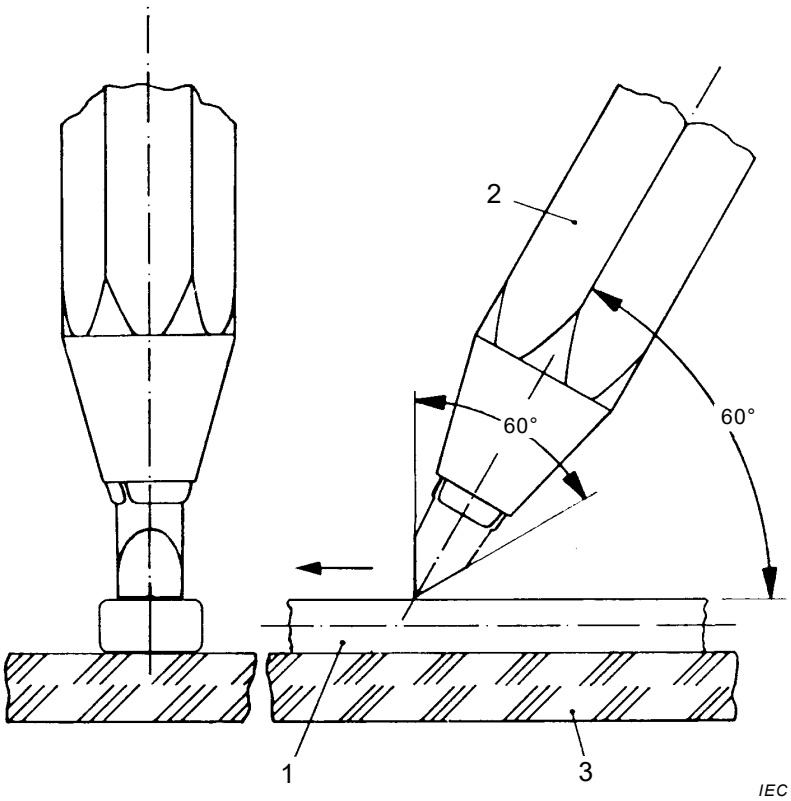

Key

1 Winding wire specimen

2 Pencil

3 Test surface

NOTE Angle tolerances ±5°.

Figure 1 – Pencil and specimen for solvent test

3.3 Procedure

A straight piece of wire, approximately 150 mm in length, shall be preconditioned for (10 ± 1) min at (130 ± 3) °C in an oven with forced air circulation. A substantial length of the wire shall then be immersed in standard solvent contained in a glass cylinder and shall be maintained therein at a temperature of (60 ± 3) °C for a period of (30 ± 3) min. The wire shall

AVA Documents Document Sharing Hub

then be removed from the solvent. The hardness of the wire surface shall then be determined in the following manner within a period of 30 s after removal from the solvent.

The specimen to be tested shall be laid on a smooth hard surface according to Figure 1. In the case of rectangular wires, the test shall be carried out on the largest side of the wire. The pencil shall be placed on the surface of the wire at an angle of approximately (60 ± 5) and the sharpened edge shall be pressed slowly along the surface of the wire with a force of approximately (5 ± 0,5) N.

Three tests shall be made. It shall be reported if the coating is removed with exposure of the bare conductor.

NOTE 1 This method can also be used for testing resistance to other fluids, for example oil.

NOTE 2 Where it is desired to determine the hardness of the insulation, the hardness of the lead pencil which just fails to remove the coating from the surface of the conductor is considered to be the hardness of the wire surface, expressed by the pencil hardness. The pencil hardness series is as described in Table 1.

Table 1 – Pencil hardness

6B	5B	4B	3B	2B	B	HB	H	2H	3H	4H	5H	6H	7H	8H	9H
4	5	6	7	8	9	10	11	12	13	14	15	16	17	18	19

4 16: Resistance to refrigerants

4.1 General

This test is applicable to enamelled round wire.

Resistance to refrigerant is expressed by the quantity of matter extracted from the coating of the wire and by the breakdown voltage after exposure to a refrigerant.

NOTE 1 The data in this test method apply to monochlorodifluoromethane (refrigerant R 22). Other refrigerants that have been determined by investigation to be appropriate for this test are provided in Annex A. When these other refrigerants are used, it is important for safety reasons to observe the critical data for these refrigerants and to comply with the revised test conditions during operation of the pressure vessel.

NOTE 2 Refrigerants like monochlorodifluoromethane and rinsing fluids like trichlorotrifluorethane (refrigerant R 113) are ozone depleting chemicals (ODC). Refrigerant and rinsing fluid are agreed upon between customer and supplier.

4.2 Extraction

4.2.1 Principle

A siphon cup containing the wire sample is placed in the pressure vessel. The extractable matter is determined after exposure of the wire sample to the refrigerant under pressure and at elevated temperature.

4.2.2 Equipment

The following equipment shall be used:

- siphon cup according to Figure 2, of 450 ml volume up to the siphoning level;
- pressure vessel of 2 000 ml volume with an internal diameter of approximately 100 mm and a pressure capacity of 200 bar (20 MPa), preferably of unwelded construction and provided with a controlled heating system;
- top closure of the vessel containing a condenser coil according to Figure 3;
- oven with forced air circulation.

Documents
Document Sharing Hub
Full document details: IEC 60851-4 2016

Key

Height of cup: (82 ± 5) mm

Diameter of cup: (84 ± 5) mm

Diameter of tubing: (5 ± 1) mm

Figure 2 – Refrigerant extractable test siphon cup

Documents
Document Sharing Hub

Full document details: IEC 60851-4 2016

Figure 3 – Condenser coil

4.2.3 Specimen

Eight wire samples each containing (0,6 ± 0,1) g of insulation shall be wound into coils of 70 turns. The specimens shall be degreased and conditioned in an oven with forced air circulation at (150 ± 3) °C for 15 min. After 30 min cooling, the eight specimens shall be weighed together to the nearest 0,000 1 g, resulting in the total initial mass M_1.

4.2.4 Procedure

The eight specimens shall be placed in the siphon cup, which is suspended (25 ± 5) mm below the condenser coil on the pressure vessel cover. The pressure vessel shall be assembled and charged with (700 ± 25) g of distilled refrigerant free from lubricant. The condenser water supply and drain line shall be connected and the pressure vessel shall be heated by means of a controlled heating system with the temperature set to (75 ± 5) °C or a lower temperature if required to comply with the conditions of the following paragraph relating to critical pressure. The water flowing through the condenser shall be adjusted to maintain a reflux rate of 20 to 25 discharges per hour from the siphon cup. The extraction period shall be 6 h.

Documents
Document Sharing Hub
Full document details: IEC 60851-4 2016