IEC 60855-1

Edition 1.0 2009-10

INTERNATIONAL STANDARD

NORME INTERNATIONALE

withdrawn

Live working – Insulating foam-filled tubes and solid rods – Part 1: Tubes and rods of a circular cross-section

Travaux sous tension – Tubes isolants remplis de mousse et tiges isolantes – Partie 1: Tubes et tiges de section circulaire

IEC 60855-1:2009

Documents
Document Sharing Hub

Full document details: IEC 60855-1 2009

THIS PUBLICATION IS COPYRIGHT PROTECTED

Copyright © 2009 IEC, Geneva, Switzerland

All rights reserved. Unless otherwise specified, no part of this publication may be reproduced or utilized in any form or by any means, electronic or mechanical, including photocopying and microfilm, without permission in writing from either IEC or IEC's member National Committee in the country of the requester.
If you have any questions about IEC copyright or have an enquiry about obtaining additional rights to this publication, please contact the address below or your local IEC member National Committee for further information.

Droits de reproduction réservés. Sauf indication contraire, aucune partie de cette publication ne peut être reproduite ni utilisée sous quelque forme que ce soit et par aucun procédé, électronique ou mécanique, y compris la photocopie et les microfilms, sans l'accord écrit de la CEI ou du Comité national de la CEI du pays du demandeur.
Si vous avez des questions sur le copyright de la CEI ou si vous désirez obtenir des droits supplémentaires sur cette publication, utilisez les coordonnées ci-après ou contactez le Comité national de la CEI de votre pays de résidence.

IEC Central Office
3, rue de Varembé
CH-1211 Geneva 20
Switzerland
Email: inmail@iec.ch
Web: www.iec.ch

About the IEC

The International Electrotechnical Commission (IEC) is the leading global organization that prepares and publishes International Standards for all electrical, electronic and related technologies.

About IEC publications

The technical content of IEC publications is kept under constant review by the IEC. Please make sure that you have the latest edition, a corrigenda or an amendment might have been published.

- Catalogue of IEC publications: www.iec.ch/searchpub
The IEC on-line Catalogue enables you to search by a variety of criteria (reference number, text, technical committee,…). It also gives information on projects, withdrawn and replaced publications.
- IEC Just Published: www.iec.ch/online_news/justpub
Stay up to date on all new IEC publications. Just Published details twice a month all new publications released. Available on-line and also by email.
- Electropedia: www.electropedia.org
The world's leading online dictionary of electronic and electrical terms containing more than 20 000 terms and definitions in English and French, with equivalent terms in additional languages. Also known as the International Electrotechnical Vocabulary online.
- Customer Service Centre: www.iec.ch/webstore/custserv
If you wish to give us your feedback on this publication or need further assistance, please visit the Customer Service Centre FAQ or contact us:
Email: csc@iec.ch
Tel.: +41 22 919 02 11
Fax: +41 22 919 03 00

A propos de la CEI

La Commission Electrotechnique Internationale (CEI) est la première organisation mondiale qui élabore et publie des normes internationales pour tout ce qui a trait à l'électricité, à l'électronique et aux technologies apparentées.

A propos des publications CEI

Le contenu technique des publications de la CEI est constamment revu. Veuillez vous assurer que vous possédez l'édition la plus récente, un corrigendum ou amendement peut avoir été publié.

- Catalogue des publications de la CEI: www.iec.ch/searchpub/cur_fut-f.htm
Le Catalogue en-ligne de la CEI vous permet d'effectuer des recherches en utilisant différents critères (numéro de référence, texte, comité d'études,…). Il donne aussi des informations sur les projets et les publications retirées ou remplacées.
- Just Published CEI: www.iec.ch/online_news/justpub
Restez informé sur les nouvelles publications de la CEI. Just Published détaille deux fois par mois les nouvelles publications parues. Disponible en-ligne et aussi par email.
- Electropedia: www.electropedia.org
Le premier dictionnaire en ligne au monde de termes électroniques et électriques. Il contient plus de 20 000 termes et définitions en anglais et en français, ainsi que les termes équivalents dans les langues additionnelles. Egalement appelé Vocabulaire Electrotechnique International en ligne.
- Service Clients: www.iec.ch/webstore/custserv/custserv_entry-f.htm
Si vous désirez nous donner des commentaires sur cette publication ou si vous avez des questions, visitez le FAQ du Service clients ou contactez-nous:
Email: csc@iec.ch
Tél.: +41 22 919 02 11
Fax: +41 22 919 03 00

Withdrawn

Documents
Document Sharing Hub

Full document details: IEC 60855-1 2009

IEC 60855-1

Edition 1.0 2009-10

INTERNATIONAL STANDARD

NORME INTERNATIONALE

withdrawn

Live working – Insulating foam-filled tubes and solid rods – Part 1: Tubes and rods of a circular cross-section

Travaux sous tension – Tubes isolants remplis de mousse et tiges isolantes – Partie 1: Tubes et tiges de section circulaire

INTERNATIONAL
ELECTROTECHNICAL
COMMISSION

COMMISSION
ELECTROTECHNIQUE
INTERNATIONALE

PRICE CODE
CODE PRIX

V

ICS 13.260; 29.240.20; 29.260

ISBN 978-2-88910-314-0

® Registered trademark of the International Electrotechnical Commission
Marque déposée de la Commission Electrotechnique Internationale

Documents
Document Sharing Hub

Full document details: IEC 60855-1 2009

CONTENTS

FOREWORD 4
INTRODUCTION 6
1 Scope 7
2 Normative references 7
3 Terms and definitions 7
4 Requirements 8
4.1 Materials and design 8
4.2 Electrical requirements 8
4.3 Mechanical requirements 8
4.4 Tolerance requirements on outer diameters 8
4.5 Marking 9
4.6 Packaging 9
5 Testing provisions 9
5.1 General 9
5.2 Type test conditions 9
5.2.1 General 9
5.2.2 Groups and test pieces 10
5.3 Visual and dimensional checks 10
5.3.1 General 10
5.3.2 Visual check 10
5.3.3 Dimensional check 10
5.4 Electrical tests 11
5.4.1 Dielectric test under dry condition 11
5.4.2 Dielectric test after exposure to water 12
5.4.3 Wet test 19
5.5 Mechanical tests 21
5.5.1 Bending test 21
5.5.2 Torsion test 23
5.5.3 Crushing test on tube 25
5.5.4 Electrical test after mechanical ageing 26
5.5.5 Dye penetration test 27
5.5.6 Durability of marking 27
6 Conformity assessment of tubes and rods having completed the production phase 27
7 Modifications 27
Annex A (informative) Usual outer diameters 28
Annex B (normative) Plan of carrying out of the type tests 29
Annex C (normative) Classification of defects and associated requirements and tests 30
Bibliography 31

Figure 1 – Dielectric test under dry condition – Typical test arrangement 11
Figure 2 – Dielectric test after exposure to water – Typical test arrangement 13
Figure 3 – Dielectric test after exposure to water – Assembly diagram of the test piece to the guard electrodes 14
Figure 4 – Dielectric test after exposure to water – Constructional drawings for guard electrodes and parts 16

Withdrawn
AVA Documents
Document Sharing Hub
Full document details: IEC 60855-1 2009

Figure 5 – Examples of constructional drawings for guard electrode parts according to some test piece diameters 17
Figure 6 – Wet test 21
Figure 7 – Bending test 22
Figure 8 – Torsion test – Examples for fixing tube or rod 24
Figure 9 – Crushing test 26

Table 1 – Tolerances on outer diameter d 8
Table 2 – Maximum values for the current I 19
Table 3 – Values of F_d, f and F_r for bending test 23
Table 4 – Values of C_d, a_d and C_r for torsion test 25
Table 5 – Values of F_d and F_r for crushing test 25
Table A.1 – Usual diameters 28
Table B.1 – Chronological order of the type tests 29
Table C.1 – Classification of defects and associated requirements and tests 30

Withdrawn

Documents
Document Sharing Hub

Full document details: IEC 60855-1 2009

INTERNATIONAL ELECTROTECHNICAL COMMISSION

LIVE WORKING – INSULATING FOAM-FILLED TUBES AND SOLID RODS –

Part 1: Tubes and rods of a circular cross-section

FOREWORD

1) The International Electrotechnical Commission (IEC) is a worldwide organization for standardization comprising all national electrotechnical committees (IEC National Committees). The object of IEC is to promote international co-operation on all questions concerning standardization in the electrical and electronic fields. To this end and in addition to other activities, IEC publishes International Standards, Technical Specifications, Technical Reports, Publicly Available Specifications (PAS) and Guides (hereafter referred to as "IEC Publication(s)"). Their preparation is entrusted to technical committees; any IEC National Committee interested in the subject dealt with may participate in this preparatory work. International, governmental and non-governmental organizations liaising with the IEC also participate in this preparation. IEC collaborates closely with the International Organization for Standardization (ISO) in accordance with conditions determined by agreement between the two organizations.
2) The formal decisions or agreements of IEC on technical matters express, as nearly as possible, an international consensus of opinion on the relevant subjects since each technical committee has representation from all interested IEC National Committees.
3) IEC Publications have the form of recommendations for international use and are accepted by IEC National Committees in that sense. While all reasonable efforts are made to ensure that the technical content of IEC Publications is accurate, IEC cannot be held responsible for the way in which they are used or for any misinterpretation by any end user.
4) In order to promote international uniformity, IEC National Committees undertake to apply IEC Publications transparently to the maximum extent possible in their national and regional publications. Any divergence between any IEC Publication and the corresponding national or regional publication shall be clearly indicated in the latter.
5) IEC itself does not provide any attestation of conformity. Independent certification bodies provide conformity assessment services and, in some areas, access to IEC marks of conformity. IEC is not responsible for any services carried out by independent certification bodies.
6) All users should ensure that they have the latest edition of this publication.
7) No liability shall attach to IEC or its directors, employees, servants or agents including individual experts and members of its technical committees and IEC National Committees for any personal injury, property damage or other damage of any nature whatsoever, whether direct or indirect, or for costs (including legal fees) and expenses arising out of the publication, use of, or reliance upon, this IEC Publication or any other IEC Publications.
8) Attention is drawn to the Normative references cited in this publication. Use of the referenced publications is indispensable for the correct application of this publication.
9) Attention is drawn to the possibility that some of the elements of this IEC Publication may be the subject of patent rights. IEC shall not be held responsible for identifying any or all such patent rights.

International Standard IEC 60855-1 has been prepared by technical committee 78: Live working.

This first edition of IEC 60855-1 cancels and replaces the first edition of IEC 60855 published in 1985, and constitutes a technical revision.

It includes the following significant technical changes from the previous IEC 60855:

– the clarification of the limitation of the standard to foam-filled tubes and solid rods of circular cross section;
– the review of the maximum tolerances on the outer diameter;
– the addition of a requirement for the individual packaging of the product;
– the addition of a requirement for the marking of the outer diameter on the product;

Withdrawn

AVA Documents Document Sharing Hub

Full document details: IEC 60855-1 2009

– the review of the requirements and test provisions (except for some mechanical test provisions) to permit any diameters of foam-filled tubes and solid rods:
  - the table of electrical tests specifying the limit of current is replaced by a formula;
– the introduction of a subclause for the electrical requirements (4.2) and the clarification of test results (temperature rise, 5.4.1 and 5.4.3.3);
– the dielectric test before exposure to humidity is replaced by a dielectric test under dry condition with different test set-up and different sanction;
– the application of the dye penetration test to the insulating solid rods;
– the introduction of a test for the durability of marking;
– the implementation of the outputs of IEC 61318, focusing on the classification of defects and practicability of test provisions.

Technical committee 78 is considering the preparation of IEC 60855-2, which would cover tubes and rods of cross-section other than circular.

The text of this standard is based on the following documents:

FDIS	Report on voting
78/817/FDIS	78/828/RVD

Full information on the voting for the approval of this standard can be found in the report on voting indicated in the above table.

This publication has been drafted in accordance with the ISO/IEC Directives, Part 2.

A list of all parts of the IEC 60855 series, published under the general title *Live working – Insulating foam-filled tubes and solid rods*, can be found on the IEC website.

The committee has decided that the contents of this publication will remain unchanged until the maintenance result date indicated on the IEC web site under "http://webstore.iec.ch" in the data related to the specific publication. At this date, the publication will be

- reconfirmed,
- withdrawn,
- replaced by a revised edition, or
- amended.

Withdrawn

Documents
Document Sharing Hub
Full document details: IEC 60855-1 2009

INTRODUCTION

This International Standard is intended to define essential characteristics necessary for the safe use of the tubes and rods, to determine appropriate requirements and to provide testing provisions.

This standard has been prepared in accordance with the requirements of IEC 61477.

The product covered by this standard may have an impact on the environment during some or all stages of its life cycle. These impacts can range from slight to significant, be of short-term or long-term, and occur at the global, regional or local level.

This standard does not include requirements and test provisions for the manufacturers of the product, or recommendations to the users of the product for environmental improvement. However, all parties intervening in its design, manufacture, packaging, distribution, use, maintenance, repair, reuse, recovery and disposal are invited to take account of environmental considerations.

Withdrawn

Documents
Document Sharing Hub

Full document details: IEC 60855-1 2009

LIVE WORKING –
INSULATING FOAM-FILLED TUBES AND SOLID RODS –

Part 1: Tubes and rods of a circular cross-section

Withdrawn

1 Scope

This part of IEC 60855 is applicable to insulating foam-filled tubes and solid rods, of a circular cross-section, made of synthetic materials and intended to be used for the manufacture and construction of tools and equipment for carrying out live work on electrical systems operating at voltages above 1 kV.

Tubes and rods of cross-section other than circular are not covered by this part of IEC 60855.

2 Normative references

The following referenced documents are indispensable for the application of this document. For dated references, only the edition cited applies. For undated references, the latest edition of the referenced document (including any amendments) applies.

IEC 60060-1, *High-voltage test techniques – Part 1: General definitions and test requirements*[1)]

IEC 60212:1971, *Standard conditions for use prior to and during the testing of solid electrical insulating materials*

IEC 61318:2007, *Live working – Conformity assessment applicable to tools, devices and equipment*

3 Terms and definitions

For the purposes of this document, the terms and definitions given in IEC 61318 and the following apply.

3.1
insulating tube
long-shaped hollow piece, normally of circular cross section, which is constructed or formed from synthetic insulating and rigid material and is normally reinforced, the interior of which can be foam-filled

[Definition 2.4.6 of IEC 60743]

1) A third edition of IEC 60060-1 is in preparation.

Documents
Document Sharing Hub

Full document details: IEC 60855-1 2009

3.2
insulating rod
long-shaped piece, normally of circular cross section, which is constructed or formed from synthetic insulating and rigid material and which may be reinforced

[Definition 2.4.5 of IEC 60743]

NOTE To simplify this standard, the word "tube" will be used for the "insulating foam filled tube of a circular cross-section" and the word "rod" for the "solid rod of a circular cross-section".

3.3
foam
insulating material composed of closed cells, generally made of polyurethane, used to prevent the ingress and migration of moisture

[Definition 2.4.2 of IEC 60743, modified]

4 Requirements

4.1 Materials and design

Tubes and rods shall be made of synthetic materials which may have reinforcing.

NOTE Yellow, orange and red are the preferred colours to indicate that the material has insulating properties.

The final coating, if any, shall be transparent.

The foam filling shall be bonded to the wall of the tube, and neither the foam nor the bond shall deteriorate during the tests, other than those tests which lead to destruction of the parts. The foam filling shall be free of voids, separations, cracks or other defects.

4.2 Electrical requirements

The material and the design of tubes and rods shall have insulating properties.

The external surface of the tubes and rods shall exhibit hydrophobic properties.

NOTE A test is under consideration and will be included during the next maintenance cycle of the publication.

4.3 Mechanical requirements

The material and the design of tubes and rods shall have mechanical resistant properties.

4.4 Tolerance requirements on outer diameters

The maximum tolerances permitted on the declared outer diameter (d) of tubes and rods covered by this standard, shall be as specified in Table 1.

Table 1 – Tolerances on outer diameter d

Outer diameter mm	$d < 30$	$30 \leq d < 40$	$40 \leq d < 50$	$50 \leq d < 60$	$60 \leq d < 70$	$70 \leq d < 80$	$80 \leq d$
Tolerance mm	± 0,5	± 0,55	± 0,6	± 0,65	± 0,7	± 0,75	± 0,8

For information and for reasons of compatibility with existing equipment, Table A.1 gives the diameters commonly used for live working.

Withdrawn

AVA Documents Document Sharing Hub

Full document details: IEC 60855-1 2009

4.5 Marking

Embossed marking is prohibited. The marking of each tube or rod shall include the following information as a minimum:

– name or trademark of the manufacturer;
– outer diameter;
– date of manufacture (month and year) and identification number when available;
– number of the relevant IEC standard (IEC 60855-1).

Other characteristics or information not needed at the work location, like the year of publication of the standard, shall be associated to the product item by other means, such as coded information (bar codes, microchips, etc.), or shall be associated to its packaging.

The marking shall be clearly legible to a person with normal or corrected vision, without additional magnification. The marking shall be durable and shall not affect the electrical performance of tubes or rods.

4.6 Packaging

Each tube and rod shall be delivered individually packed.

NOTE The packaging should reduce abrasive or direct contact with other tubes or rods or any surface that would damage the polished surface.

5 Testing provisions

5.1 General

This standard provides testing provisions to demonstrate that the tubes and rods comply with the requirements of Clause 4. These testing provisions are primarily intended to be used for type testing for validation of the design input. Where relevant, alternative means (calculation, examination, tests, etc.), are specified within the test subclauses for the purpose of tubes and rods having completed the production phase (see Annex C).

5.2 Type test conditions

5.2.1 General

To comply with this standard, the design of the product shall fulfil all the type tests listed in Table B.1.

The type tests shall be carried out following the order given in the Table B.1.

Each test shall be carried out on each separate test piece in the relevant group.

Any test piece failing to pass any one of the tests mentioned in Table B.1 shall result in the design being rejected.

For all type tests, environmental conditions in the test room shall comply with the normal atmospheric conditions provided in Table I of IEC 60212, at a temperature of between 15 °C and 35 °C, with a relative humidity between 25 % and 75 % (taking into account Note 5 of Table I of IEC 60212).

NOTE This standard covers tubes and rods for use at temperatures between –25 °C and +55 °C and at a relative humidity between 20 % and 93 %. For tools intended to be used in unusual atmospheric conditions (higher or lower temperatures, higher relative humidity), the tests should be more restricting and be carried out in appropriate conditions.

Withdrawn

AVA Documents Document Sharing Hub

Full document details: IEC 60855-1 2009

Unless otherwise specified, for all type tests, the tolerance on the dimensions shall be ± 0,5 %.

When a visual check is specified, it shall be understood to be a visual check by a person with normal or corrected vision without additional magnification.

5.2.2 Groups and test pieces

The manufacturer shall supply lengths of tubes and rods to provide the following groups of test pieces.

Group 1: three test pieces of 0,3 m.

Group 2: three test pieces of 1,2 m, cut at least to 0,1 m from the end of the initial length of rod or tube provided by the manufacturer.

Group 3: three test pieces of 2,5 m in case of tube and 2 m in case of rod.

Group 4: three test pieces of 1,2 m.

Group 5: (for tubes only): three test pieces of length equal to 3 times the outer diameter ± 5 %.

Group 6: three test pieces of 2,5 m.

Group 7: three test pieces of (100 ± 5) mm, cut at least to 100 mm from the end of the initial length of rod or tube provided by the manufacturer.

Group 8: one test piece of 2 m, kept as a specimen.

The equipment used to cut the test pieces shall not leave any trace of overheating on the cross-section. The cut shall be clean, showing no signs of tearing of the fibres.

5.3 Visual and dimensional checks

5.3.1 General

These checks shall be carried out to ensure that the general requirements are fulfilled and that the dimensions comply with the specifications.

5.3.2 Visual check

Initial lengths and test pieces shall be checked visually to verify the elements of marking, the packaging and to detect constructional defects.

There are two levels of inspection to detect constructional defects:

a) A first visual check shall be carried out on each of the initial lengths of tube and rod provided by the manufacturer before the test pieces are cut from them. This is to detect any surface defects such as obviously faulty bonding between the fibre and the resin, air bubbles underneath the varnish, foreign bodies, protrusions, dirt, bumps or scratches. Any defect shall result in rejection of the initial length.

b) A second visual check shall be carried out on each of the test pieces after they have been cut. This is to detect any internal defects around the visible part of the cross-section, and more particularly, any signs of detachment between the foam and the resin, and foam of poor quality (voids, cracks). Any such defect shall result in rejection of the test piece.

5.3.3 Dimensional check

The purpose of the dimensional check is to verify that diameters comply with the marking, and the tolerance requirements comply with 4.4.

The dimensional check shall be carried out on each of the initial lengths, before the test pieces are cut from them, at both ends and in the middle.

Withdrawn

AVA Documents Document Sharing Hub

Full document details: IEC 60855-1 2009

5.4 Electrical tests

5.4.1 Dielectric test under dry condition

An example of suitable test arrangement is given in Figure 1.

Dimensions in millimetres

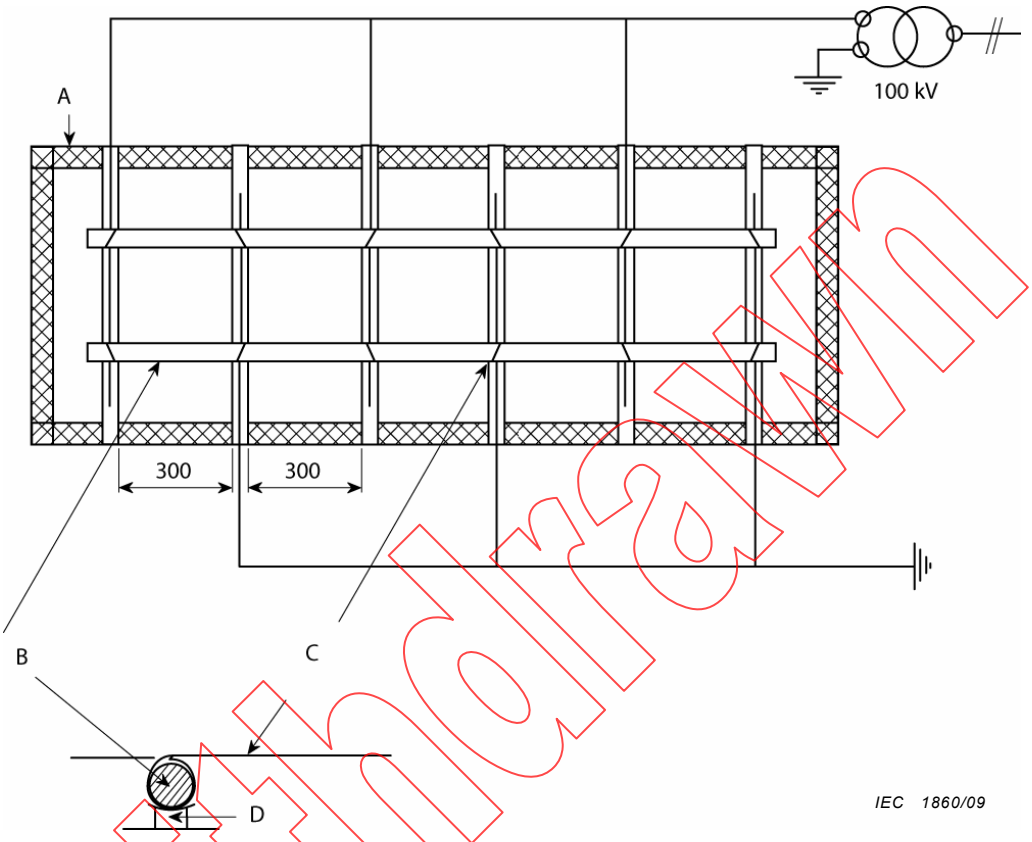

Key

A Insulating table

B Tube or rod to be tested

C Stranded wire electrodes not less than 5 mm width

D Metallic support

Figure 1 – Dielectric test under dry condition – Typical test arrangement

The dielectric test shall be carried out in accordance with IEC 60060-1. The tubes and rods shall be subjected to an alternating voltage of 100 kV r.m.s at power frequency applied between electrodes 30 cm apart, for 1 min.

The test shall be considered as passed if the tubes and rods fulfil the following:

– no flashover, no sparkover or puncture;

– no visual sign of tracking or erosion on the surface;

– no temperature rise greater than 2 °C.

The temperature measurement shall take place no more than 2 min after completion of the test.

NOTE An infrared camera can be used to measure the temperature of the surface. The camera should be calibrated for the test object prior to use.

Withdrawn

AVA Documents Document Sharing Hub

Full document details: IEC 60855-1 2009

5.4.2 Dielectric test after exposure to water

5.4.2.1 Test conditioning

5.4.2.1.1 Conditioning by humidity

Before the test, each test piece of 0,3 m length shall be prepared by cleaning with isopropanol (CH_3-CH(OH)-CH_3) and then dried in air at room temperature for a period of not less than 15 min.

NOTE It is the employer's duty to ensure that any relevant legislation and any specific safety instructions regarding the use of isopropanol are fully observed.

The test pieces shall be placed in a chamber and subjected to the following conditioning: 168 h/23C/93 % according to Table I of IEC 60212.

At the end of this conditioning period, the test pieces shall be returned to the ambient conditions of the test area. They shall be lightly wiped with a clean dry lint free cloth, the ends of the test pieces shall be covered with conducting adhesive tape, and they shall be tested immediately.

5.4.2.1.2 Conditioning by immersion

Before the test, each test piece of 0,3 m length shall be prepared by cleaning with isopropanol (CH_3-CH(OH)-CH_3) and then dried in air at room temperature for a period of not less than 15 min.

NOTE It is the employer's duty to ensure that any relevant legislation and any specific safety instructions regarding the use of isopropanol are fully observed.

The test pieces shall be conditioned by total immersion for 24 h in a tank of tap water with a minimum conductivity of 500 µS/cm, or a maximum resistivity of 20 Ω·m, at 20 °C.

At the end of this conditioning period, the test pieces shall be lightly wiped with a clean dry lint-free cloth, and the ends of the test pieces covered with conducting adhesive tape. The test pieces shall be tested upon return to room temperature in the test area.

5.4.2.2 Measurements

The test assembly shall comply with Figures 2, 3, 4 and 5. The measuring apparatus shall not be less than 2 m from the high voltage source. All measuring leads, the shunt and the optional protective gap shall be shielded and earthed. The test piece shall be mounted at an approximate height of 1 m from the ground on an insulating support. A voltage of 100 kV r.m.s. at power frequency shall be applied between the electrodes for 1 min, in accordance with IEC 60060-1.

The current passing through the test piece shall be measured (the guard electrode on the earth side is directly connected to earth). The maximum current recorded during the test is called I.

The phase difference between current and voltage shall be measured as follows:

– current (earth end), by passing it through a known impedance;
– voltage (line end), by means of an appropriate divider.

The minimum phase angle recorded during the test is called φ.

NOTE Before installing the test piece in the test set-up, reference measurements with no test piece present should be taken and the current and phase angle values recorded. This blank test will help verify the quality of the test set-up.

Withdrawn

AVA Documents Document Sharing Hub

Full document details: IEC 60855-1 2009

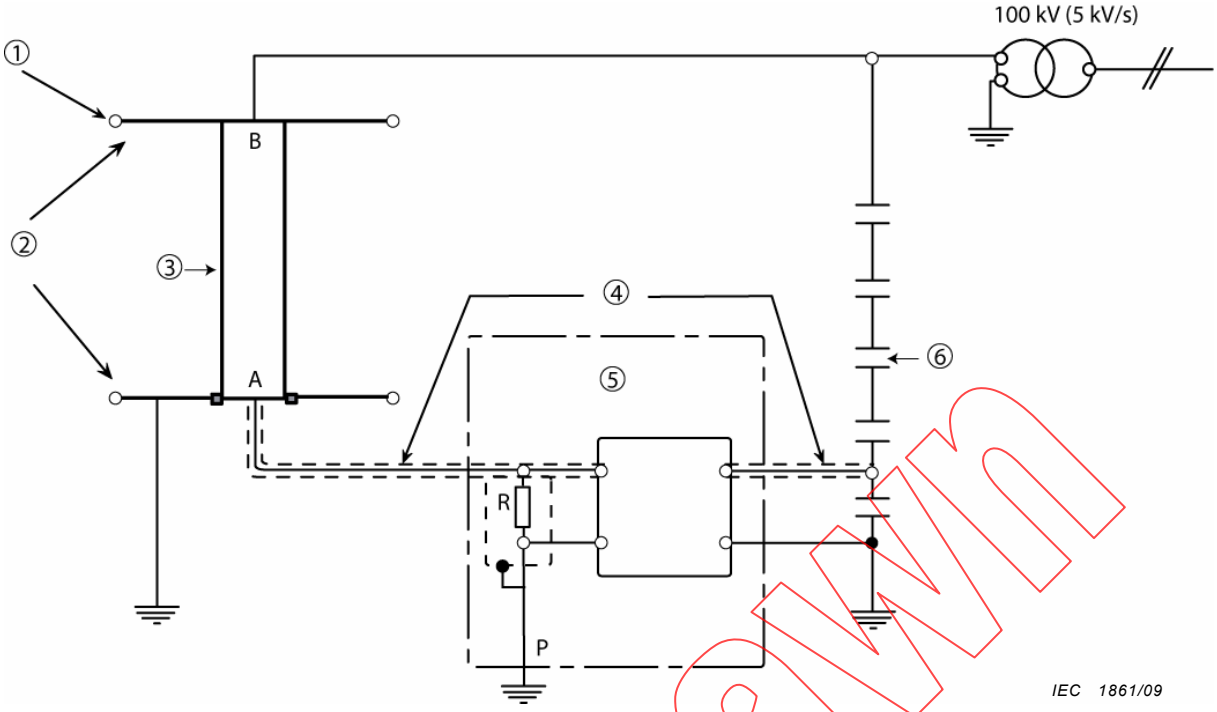

Key

1	Continuous welded tube	4	Screened leads
2	Guard electrodes	5	Measuring equipment
3	Test piece	6	Capacitive (or resistive) divider

R The resistance between points A and P ≤ 10 000 Ω

The measurement zone is situated at least 2 m away from any HV source

Figure 2 – Dielectric test after exposure to water – Typical test arrangement

Withdrawn

Documents
Document Sharing Hub
Full document details: IEC 60855-1 2009

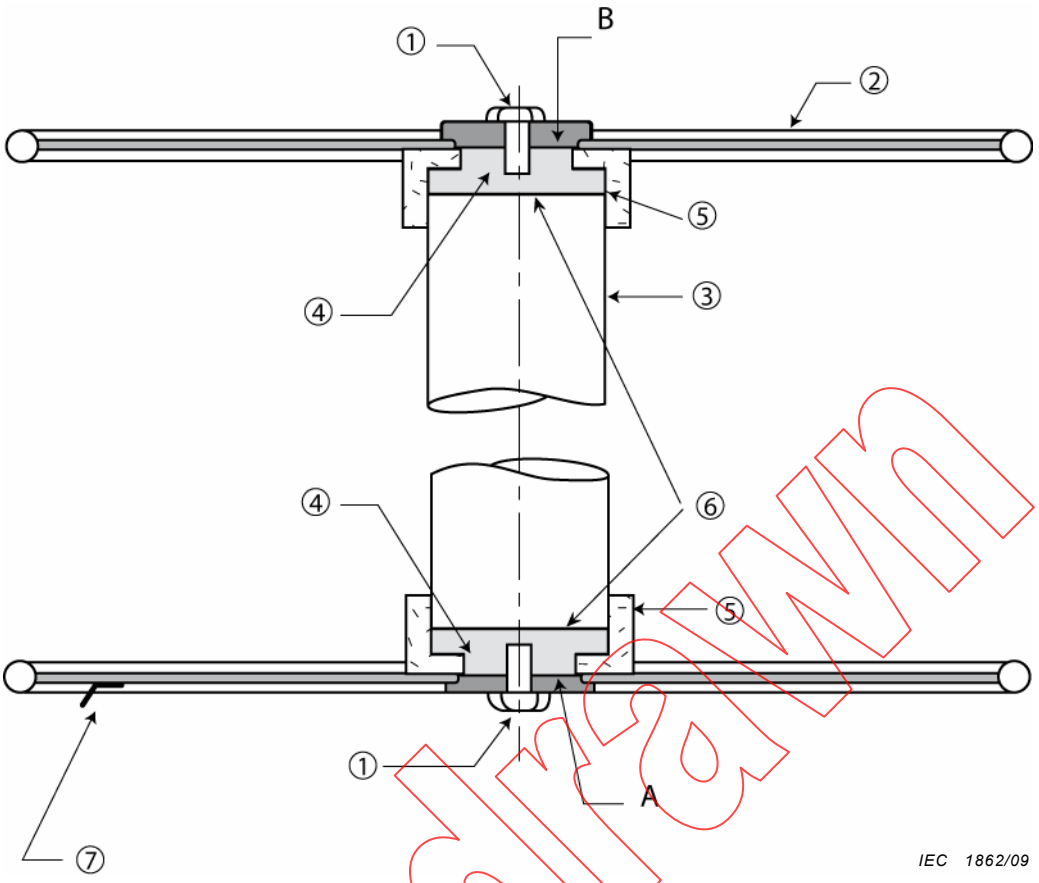

NOTE Banana plugs may be replaced by other suitable electrical connectors.

Key

A	Insulating material	B	Brass
1	Socket for ∅ 4 mm banana plug	5	Electrode support
2	Guard electrode	6	Contact maintained by conductive adhesive tape
3	Test piece of 300 mm length	7	Socket for ∅ 4 mm banana plug soldered on guard electrode
4	Brass electrode		

Figure 3 – Dielectric test after exposure to water – Assembly diagram of the test piece to the guard electrodes

Withdrawn

Documents
Document Sharing Hub
Full document details: IEC 60855-1 2009

Dimensions in millimetres

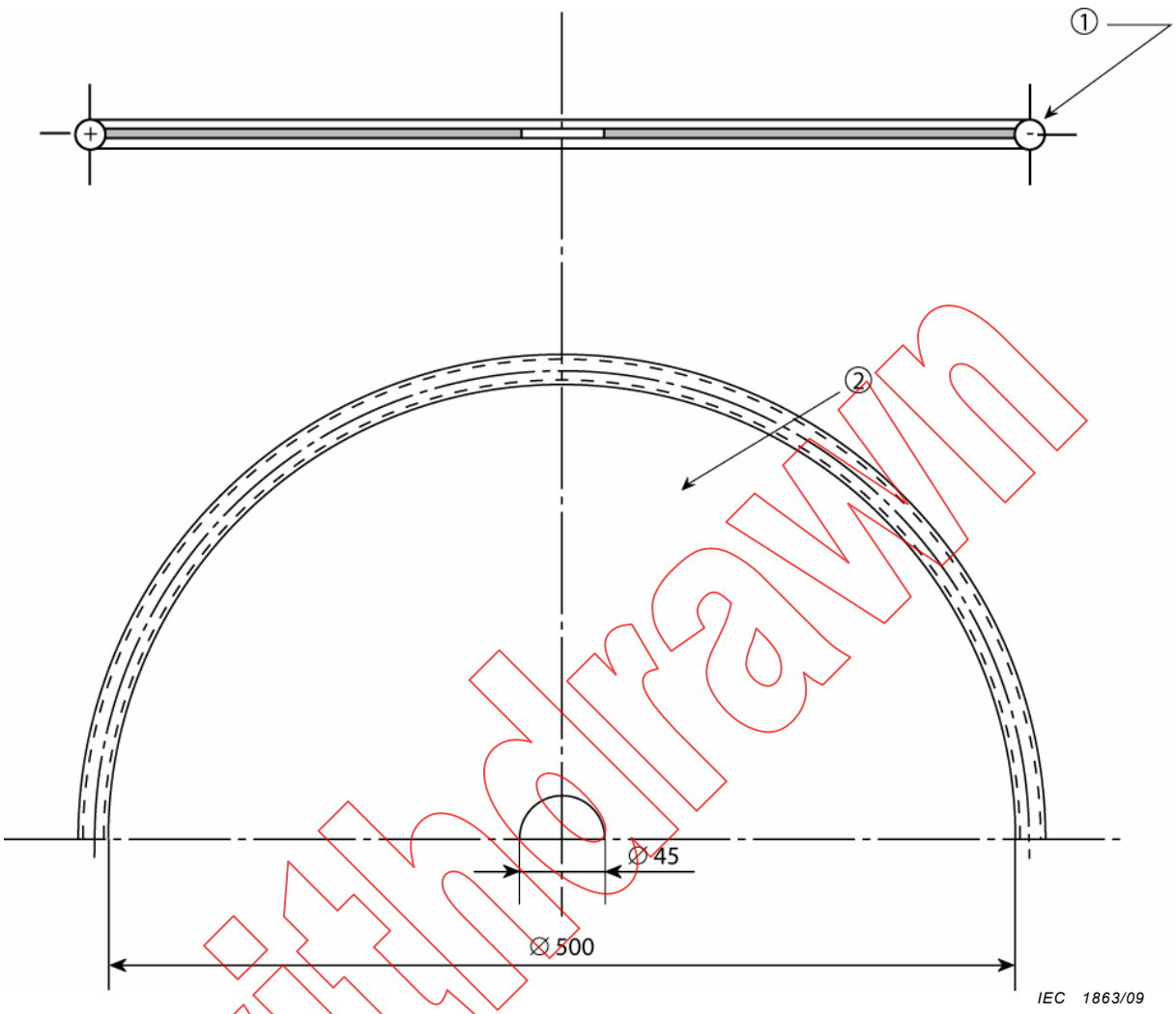

Key

1 ∅ 12 mm copper tube soldered onto brass plate

2 Brass thickness 1,5 mm

Figure 4a – Constructional drawing for guard electrodes (two required)

withdrawn

Documents
Document Sharing Hub
Full document details: IEC 60855-1 2009

Dimensions in millimetres

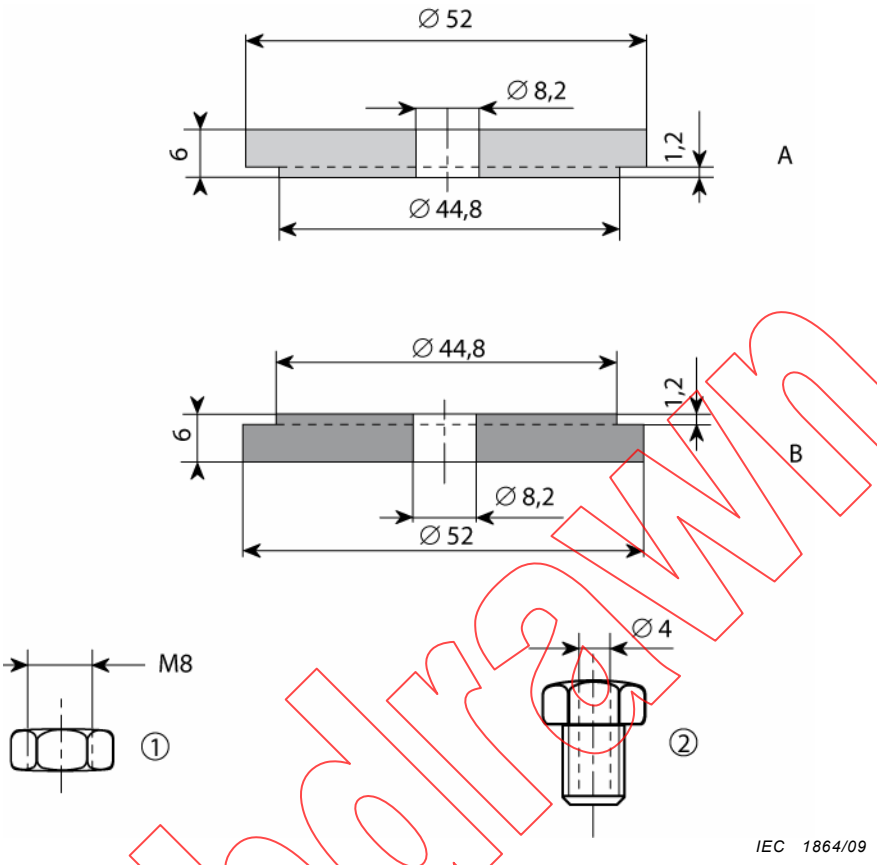

Key

A Insulating material

B Brass

1 Two M8 brass nuts for rods

2 Two M8 × 10 brass screws with ∅ 4 mm holes for tubes

Figure 4b – Constructional drawings for parts A and B

Figure 4 – Dielectric test after exposure to water – Constructional drawings for guard electrodes and parts

withdrawn

Documents
Document Sharing Hub
Full document details: IEC 60855-1 2009

Dimensions in millimetres

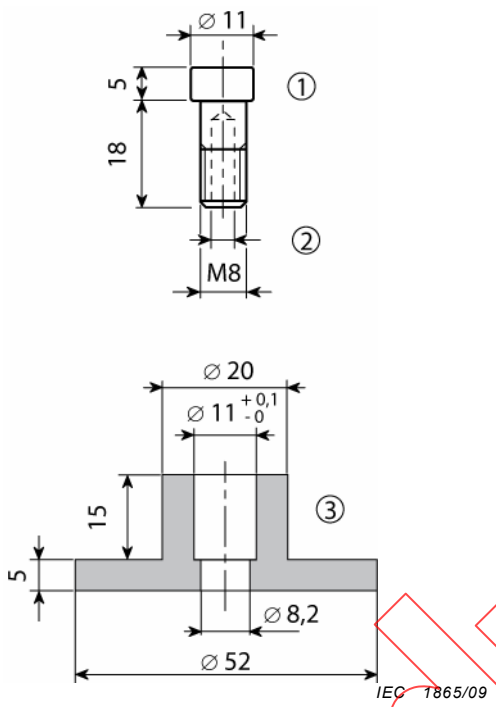

Figure 5a – For 10 mm diameter rod

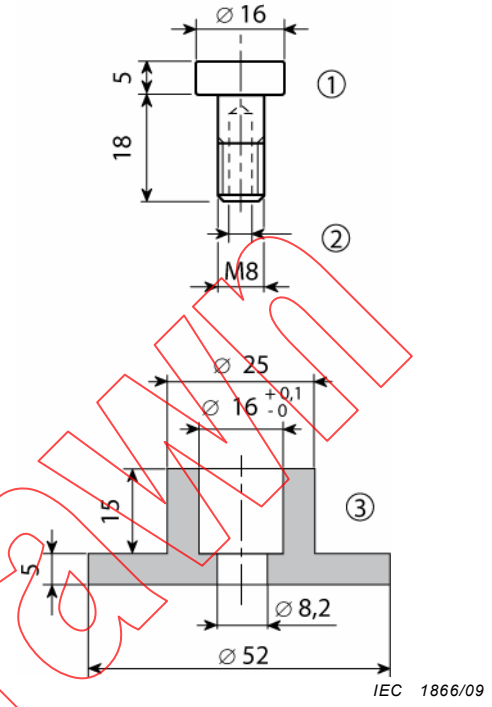

Figure 5b – For 15 mm diameter rod

Dimensions in millimetres

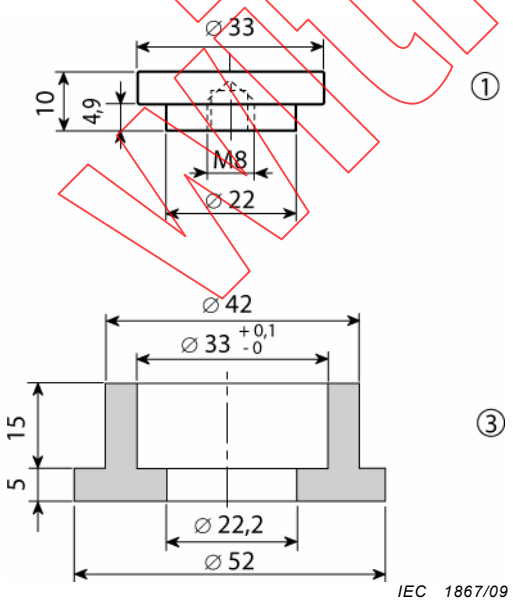

Figure 5c – For 32 mm diameter tube

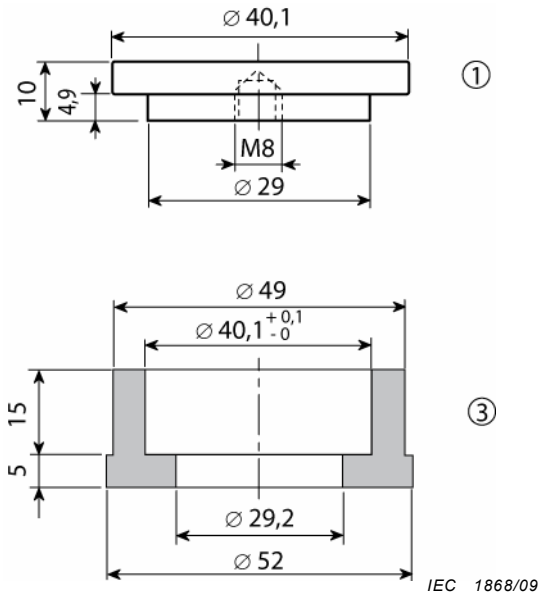

Figure 5d – For 39 mm diameter tube

Figure 5 – Examples of constructional drawings for guard electrode parts according to some test piece diameters

Withdrawn

AVA Documents Document Sharing Hub

Full document details: IEC 60855-1 2009

Dimensions in millimetres

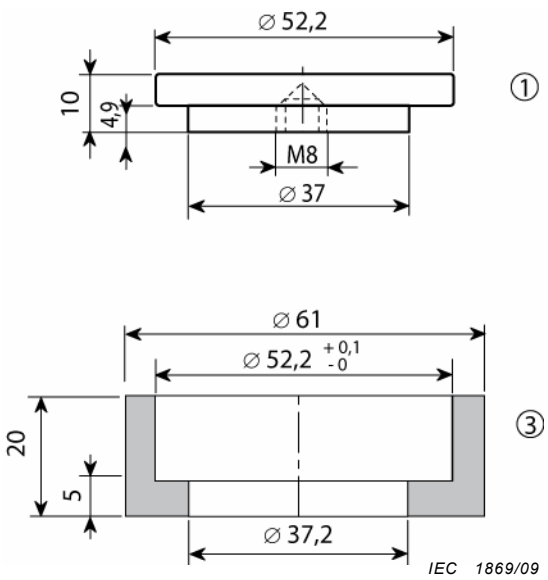

Figure 5e – For 51 mm diameter tube

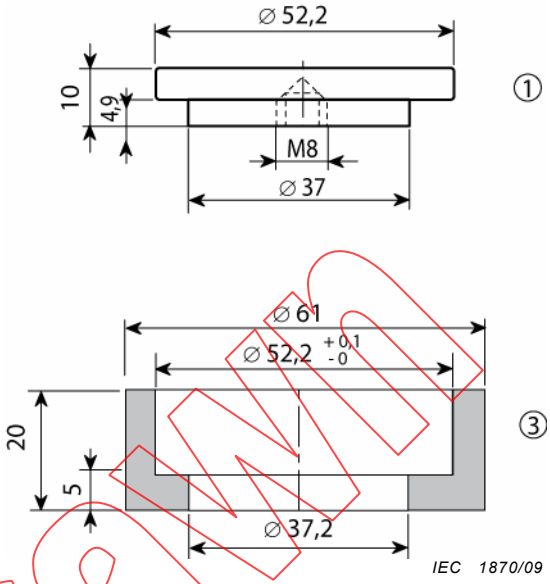

Figure 5f – For 64 mm diameter tube

Dimensions in millimetres

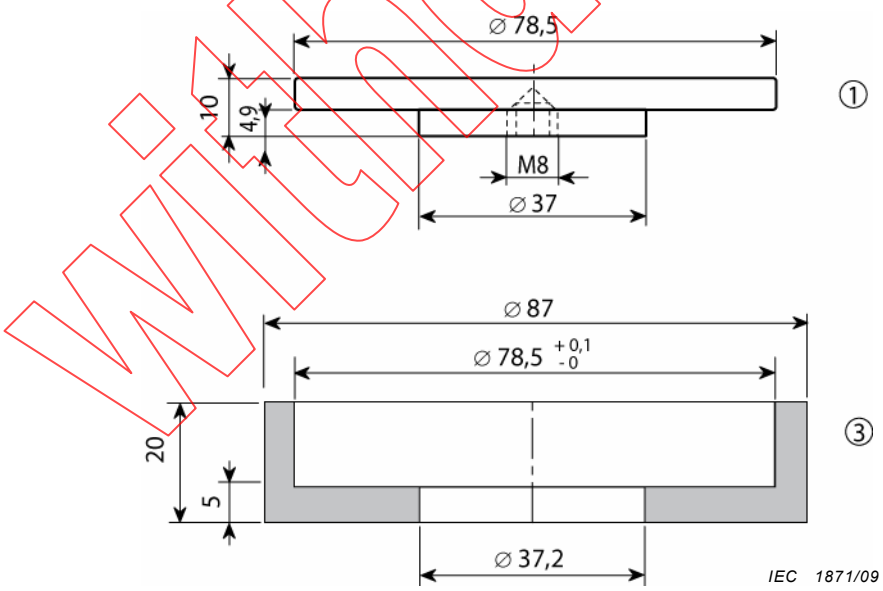

Figure 5g – For 77 mm diameter tube

Key

1 Two brass electrodes

2 ∅ 4 mm hole for banana plug

3 Two insulating supports

Figure 5 (*continued*)

Withdrawn

Documents
Document Sharing Hub

Full document details: IEC 60855-1 2009