IEC 60884-2-6

Edition 2.0 2025-02
EXTENDED VERSION

INTERNATIONAL STANDARD

This full version of IEC 60884-2-6:2025 includes the content of the references made to IEC 60884-1:2022

Plugs and socket-outlets for household and similar purposes – Part 2-6: Particular requirements for switched socket-outlets with interlock for fixed electrical installations

IEC 60884-2-6:2025-02 EXV(en)

Documents
Document Sharing Hub

Full document details: IEC 60884-2-6 2025 EXV

THIS PUBLICATION IS COPYRIGHT PROTECTED
Copyright © 2025 IEC, Geneva, Switzerland

All rights reserved. Unless otherwise specified, no part of this publication may be reproduced or utilized in any form or by any means, electronic or mechanical, including photocopying and microfilm, without permission in writing from either IEC or IEC's member National Committee in the country of the requester. If you have any questions about IEC copyright or have an enquiry about obtaining additional rights to this publication, please contact the address below or your local IEC member National Committee for further information.

IEC Secretariat
3, rue de Varembé
CH-1211 Geneva 20
Switzerland

Tel.: +41 22 919 02 11
info@iec.ch
www.iec.ch

About the IEC
The International Electrotechnical Commission (IEC) is the leading global organization that prepares and publishes International Standards for all electrical, electronic and related technologies.

About IEC publications
The technical content of IEC publications is kept under constant review by the IEC. Please make sure that you have the latest edition, a corrigendum or an amendment might have been published.

IEC publications search - webstore.iec.ch/advsearchform
The advanced search enables to find IEC publications by a variety of criteria (reference number, text, technical committee, …). It also gives information on projects, replaced and withdrawn publications.

IEC Just Published - webstore.iec.ch/justpublished
Stay up to date on all new IEC publications. Just Published details all new publications released. Available online and once a month by email.

IEC Customer Service Centre - webstore.iec.ch/csc
If you wish to give us your feedback on this publication or need further assistance, please contact the Customer Service Centre: sales@iec.ch.

IEC Products & Services Portal - products.iec.ch
Discover our powerful search engine and read freely all the publications previews, graphical symbols and the glossary. With a subscription you will always have access to up to date content tailored to your needs.

Electropedia - www.electropedia.org
The world's leading online dictionary on electrotechnology, containing more than 22 500 terminological entries in English and French, with equivalent terms in 25 additional languages. Also known as the International Electrotechnical Vocabulary (IEV) online.

Documents
Document Sharing Hub

Full document details: IEC 60884-2-6 2025 EXV

IEC 60884-2-6

Edition 2.0 2025-02
EXTENDED VERSION

INTERNATIONAL STANDARD

This full version of IEC 60884-2-6:2025 includes the content of the references made to IEC 60884-1:2022

Plugs and socket-outlets for household and similar purposes – Part 2-6: Particular requirements for switched socket-outlets with interlock for fixed electrical installations

INTERNATIONAL
ELECTROTECHNICAL
COMMISSION

ICS 29.120.30

ISBN 978-2-8327-0266-6

Warning! Make sure that you obtained this publication from an authorized distributor.

® Registered trademark of the International Electrotechnical Commission

Documents
Document Sharing Hub

Full document details: IEC 60884-2-6 2025 EXV

CONTENTS

FOREWORD 6
1 Scope 8
2 Normative references 8
3 Terms and definitions 10
4 General requirements 17
5 General remarks on tests 17
6 Ratings 20
7 Classification 20
8 Marking 23
9 Checking of dimensions 28
10 Protection against electric shock 29
11 Provision for earthing 36
12 Terminals and terminations 38
13 Construction of fixed socket-outlets 58
14 Construction of plugs and portable socket-outlets 71
15 Interlocked socket-outlets 71
16 Resistance to ageing, protection provided by enclosures, and resistance to humidity 73
17 Insulation resistance and electric strength 80
18 Operation of earthing contacts 82
19 Temperature rise 82
20 Breaking capacity 90
21 Normal operation 94
22 Force necessary to withdraw the plug 95
23 Flexible cables and their connection 99
24 Mechanical strength 99
25 Resistance to heat 117
26 Screws, current-carrying parts and connections 120
27 Creepage distances, clearances and distances through sealing compound 122
28 Resistance of insulating material to abnormal heat, to fire and to tracking 124
29 Resistance to rusting 129
30 Additional tests on pins provided with insulating sleeves 129
31 EMC requirements 129
32 Electromagnetic fields (EMF) requirements 130
Annex A (normative) Safety-related routine tests for factory-wired portable accessories (protection against electric shock and correct polarity) 131
Annex B (informative) Alternative gripping tests 132
Annex C (normative) Switches incorporated in portable socket-outlets 133
Annex D (normative) Requirements for plugs and fixed or portable socket-outlets intended to be used with AWG cables 134
Annex E (informative) Tests to be applied during the production of crimped connections in accessories 147

Documents
Document Sharing Hub
Full document details: IEC 60884-2-6 2025 EXV

Annex F (normative) Additional requirements for accessories provided with insulation-piercing terminals ... 149
Annex G (informative) Additional tests and requirements for accessories intended to be used in ambient temperatures below −5 °C down to and including −45 °C ... 159
Annex H (informative) Additional tests and requirements for accessories intended to be used in ambient temperatures above +40 °C up to and including +70 °C ... 164
Annex I (normative) Additional requirements and tests for plugs and socket-outlets for high-load (HL) application ... 167
Bibliography ... 168

Figure 1 – Examples of accessories ... 10
Figure 2 – Example of thread-forming screw ... 13
Figure 3 – Example of thread-cutting screw ... 14
Figure 4 – Examples of membranes and grommets ... 15
Figure 5 – Test piston dimensions ... 27
Figure 6 – Arrangement for compression test ... 30
Figure 7 – Gauge for checking non-accessibility of live parts, through shutters ... 33
Figure 8 – Gauge for checking non-accessibility of live parts, through shutters, and of live parts of socket-outlets with increased protection ... 34
Figure 9 – Pillar terminals ... 41
Figure 10 – Screw head terminals and stud terminals ... 42
Figure 11 – Saddle terminals ... 43
Figure 12 – Mantle terminals ... 44
Figure 13 – Arrangement for checking damage to conductors ... 45
Figure 14 – Information for deflection test ... 56
Figure 15 – Verification of the requirements of 13.4 ... 62
Figure 16 – Device for checking the resistance to lateral strain ... 66
Figure 101 – Circuit for the tests of 15.101 ... 71
Figure 18 – Types of test wall ... 77
Figure 19 – Test set-up in accordance with 16.2.3 ... 78
Figure 20 – Clamping unit for the temperature rise test of Clause 19 ... 85
Figure 21 – Example of a trend line calculation ... 90
Figure 22 – Example of apparatus for breaking capacity and normal operation test ... 92
Figure 23 – Circuit diagrams for breaking capacity and normal operation tests ... 93
Figure 25 – Apparatus for verification of maximum withdrawal force ... 96
Figure 26 – Gauge for the verification of minimum withdrawal force ... 97
Figure 29 – Sketches showing the application of the blows according to Table 23 ... 102
Figure 30 – Apparatus for impact test at low temperature of 24.5 ... 105
Figure 31 – Apparatus for abrasion test on insulating sleeves of plug pins ... 106
Figure 32 – Arrangement for mechanical strength test on multiple portable socket-outlets ... 108
Figure 33 – Example of test arrangement to verify the retention of pins in the body of the plug ... 109
Figure 34 – Arrangement for test on covers or cover-plates ... 112
Figure 35 – Gauge (thickness about 2 mm) for the verification of the outline of covers or cover-plates ... 113

AVA Documents
Document Sharing Hub
Full document details: IEC 60884-2-6 2025 EXV

Figure 36 – Examples of application of the gauge of Figure 35 on covers fixed without screws on a mounting surface or supporting surface 114
Figure 37 – Examples of application of the gauge of Figure 35 in accordance with the requirements of 24.16 115
Figure 38 – Gauge for verification of grooves, holes and reverse tapers 116
Figure 39 – Sketch showing the direction of application of the gauge of Figure 38 116
Figure 40 – Ball pressure test apparatus 118
Figure 41 – Apparatus for compression test for the verification of resistance to heat specification of 25.5 119
Figure 42 – Diagrammatic representation of 28.1.2 126
Figure 43 – Apparatus for testing resistance to abnormal heat of insulating sleeves of plug pins 128
Figure F.1 – Example of IPTs 157
Figure F.2 – Example of test-points 157
Figure F.3 – Temperature cycle for voltage drop test 12.4.11 158
Figure H.1 – Schematic drawing of a de-rating curve with an example of a de-rated current I_d at the operating ambient temperature t_d 165

Table 1 – Survey of specimens needed for tests 18
Table 2 – Preferred combinations of types and ratings 20
Table 3 – Gauge tolerances 28
Table 4 – Relationship between rated current and connectable nominal cross-sectional areas of copper conductors 38
Table 5 – Values for pull test for screw-type terminals 46
Table 6 – Composition of conductors 47
Table 7 – Tightening torques for the verification of the mechanical strength of screw-type terminals 49
Table 8 – Relationship between rated current and connectable cross-sectional areas of copper conductors for screwless-type terminals 50
Table 9 – Value for pull test for screwless-type-type terminals 52
Table 10 – Values for flexing under mechanical load test for copper conductors 53
Table 11 – Test current for the verification of electrical and thermal stresses in normal use for screwless-type terminals 53
Table 12 – Nominal cross-sectional areas of rigid copper conductors for deflection test of screwless-type terminals 56
Table 13 – Deflection test forces for screwless-type terminals 57
Table 14 – Forces to be applied to covers, cover-plates or actuating members whose fixing is not dependent on screws 64
Table 15 – External cable dimension limits for surface-type socket-outlets 68
Table 16 – Nominal cross-sectional areas of copper conductors for the temperature-rise test 82
Table 17 – Test current for cycling tests on accessories with crimped connection 89
Table 19 – Maximum and minimum withdrawal force for plugs and socket-outlets 98
Table 23 – Height of fall for impact tests 101
Table 24 – Torque test values for cable glands 106
Table 25 – Resistance to heat of different types or parts of accessories 117

AVA Documents
Document Sharing Hub
Full document details: IEC 60884-2-6 2025 EXV

Table 26 – Creepage distances, clearances and distances through insulating sealing compound 123
Table F.1 – Relationship between rated currents and connectable cross-sectional areas of copper conductors for IPTs 152
Table F.2 – Test current for the verification of electrical and thermal stresses in normal use of IPTs 156
Table G.1 – Energy for impact tests 162

Documents
Document Sharing Hub
Full document details: IEC 60884-2-6 2025 EXV

INTERNATIONAL ELECTROTECHNICAL COMMISSION

PLUGS AND SOCKET-OUTLETS FOR HOUSEHOLD AND SIMILAR PURPOSES –

Part 2-6: Particular requirements for switched socket-outlets with interlock for fixed electrical installations

FOREWORD

1) The International Electrotechnical Commission (IEC) is a worldwide organization for standardization comprising all national electrotechnical committees (IEC National Committees). The object of IEC is to promote international co-operation on all questions concerning standardization in the electrical and electronic fields. To this end and in addition to other activities, IEC publishes International Standards, Technical Specifications, Technical Reports, Publicly Available Specifications (PAS) and Guides (hereafter referred to as "IEC Publication(s)"). Their preparation is entrusted to technical committees; any IEC National Committee interested in the subject dealt with may participate in this preparatory work. International, governmental and non-governmental organizations liaising with the IEC also participate in this preparation. IEC collaborates closely with the International Organization for Standardization (ISO) in accordance with conditions determined by agreement between the two organizations.
2) The formal decisions or agreements of IEC on technical matters express, as nearly as possible, an international consensus of opinion on the relevant subjects since each technical committee has representation from all interested IEC National Committees.
3) IEC Publications have the form of recommendations for international use and are accepted by IEC National Committees in that sense. While all reasonable efforts are made to ensure that the technical content of IEC Publications is accurate, IEC cannot be held responsible for the way in which they are used or for any misinterpretation by any end user.
4) In order to promote international uniformity, IEC National Committees undertake to apply IEC Publications transparently to the maximum extent possible in their national and regional publications. Any divergence between any IEC Publication and the corresponding national or regional publication shall be clearly indicated in the latter.
5) IEC itself does not provide any attestation of conformity. Independent certification bodies provide conformity assessment services and, in some areas, access to IEC marks of conformity. IEC is not responsible for any services carried out by independent certification bodies.
6) All users should ensure that they have the latest edition of this publication.
7) No liability shall attach to IEC or its directors, employees, servants or agents including individual experts and members of its technical committees and IEC National Committees for any personal injury, property damage or other damage of any nature whatsoever, whether direct or indirect, or for costs (including legal fees) and expenses arising out of the publication, use of, or reliance upon, this IEC Publication or any other IEC Publications.
8) Attention is drawn to the Normative references cited in this publication. Use of the referenced publications is indispensable for the correct application of this publication.
9) IEC draws attention to the possibility that the implementation of this document may involve the use of (a) patent(s). IEC takes no position concerning the evidence, validity or applicability of any claimed patent rights in respect thereof. As of the date of publication of this document, IEC had not received notice of (a) patent(s), which may be required to implement this document. However, implementers are cautioned that this may not represent the latest information, which may be obtained from the patent database available at https://patents.iec.ch. IEC shall not be held responsible for identifying any or all such patent rights.

This extended version (EXV) of the official IEC Standard provides the user with the full content of the Standard.

IEC 60884-2-6:2025 EXV includes the content of IEC 60884-2-6:2025, and the references made to IEC 60884-1:2022.

The specific content of IEC 60884-2-6:2025 is displayed on a blue background.

Documents
Document Sharing Hub

Full document details: IEC 60884-2-6 2025 EXV

IEC 60884-2-6 has been prepared by subcommittee 23B: Plugs, socket-outlets and switches, of IEC technical committee 23: Electrical accessories. It is an International Standard.

This second edition cancels and replaces the first edition published in 1997. This edition constitutes a technical revision.

This edition includes the following significant technical changes with respect to the previous edition:

a) alignment to IEC 60884-1, fourth edition.

The text of this International Standard is based on the following documents:

Draft	Report on voting
23B/1547/FDIS	23B/1561/RVD

Full information on the voting for its approval can be found in the report on voting indicated in the above table.

The language used for the development of this International Standard is English.

This document was drafted in accordance with ISO/IEC Directives, Part 2, and developed in accordance with ISO/IEC Directives, Part 1 and ISO/IEC Directives, IEC Supplement, available at www.iec.ch/members_experts/refdocs. The main document types developed by IEC are described in greater detail at www.iec.ch/publications.

This document is to be used in conjunction with IEC 60884-1:2022.

This document supplements or modifies the corresponding clauses in IEC 60884-1:2022, so as to convert that publication into the IEC standard: Particular requirements for switched socket-outlets without interlock for fixed installations.

When a particular subclause of IEC 60884-1:2022 is mentioned in this document, that subclause applies as far as reasonable. Where this document states "addition", "modification" or "replacement", the relevant text of IEC 60884-1:2022 is to be adapted accordingly.

In this document the following print types are used:

– requirements proper: in roman type;
– *test specifications: in italic type;*
– Explanatory matter: in smaller roman type.

Subclauses, notes, figures and tables or figures which are additional to those in IEC 60884-1:2022 are numbered starting from 101.

A list of all the parts in the IEC 60884 series, under the general title *Plugs and socket-outlets for household and similar purposes*, can be found on the IEC website.

The committee has decided that the contents of this document will remain unchanged until the stability date indicated on the IEC website under webstore.iec.ch in the data related to the specific document. At this date, the document will be

- reconfirmed,
- withdrawn, or
- revised.

Documents
Document Sharing Hub

Full document details: IEC 60884-2-6 2025 EXV

PLUGS AND SOCKET-OUTLETS FOR HOUSEHOLD AND SIMILAR PURPOSES –

Part 2-6: Particular requirements for switched socket-outlets with interlock for fixed electrical installations

1 Scope

This part of IEC 60884 applies to switched socket-outlets with interlock for AC only, for fixed electrical installations, with or without earthing contact, with rated voltage above 50 V but not exceeding 440 V and a rated current not exceeding 32 A, intended for household and similar purposes, either indoors or outdoors.

Switched socket-outlets with interlock according to this document consist of a combination of socket-outlets according to IEC 60884-1, interlocked with a switch according to IEC 60669-1 and/or IEC 60669-2-1 supplied as a complete accessory.

The rated current is limited to 16 A maximum for fixed accessories provided with screwless terminals.

This document does not cover requirements for flush mounting boxes.

However, it covers those requirements for surface-type mounting boxes which are necessary for the tests on socket-outlets.

NOTE 1 General requirements for mounting boxes are covered by IEC 60670.

NOTE 2 Interlocked socket-outlets incorporating devices according to IEC 60898, IEC 61008 and IEC 61009 are not covered by this document. This document can be used as a guide for the requirements and tests of these accessories where relevant.

This document does not apply to

– interlocked socket-outlets for industrial purposes;
– interlocked socket-outlets for EV;
– interlocked socket-outlets for SELV.

Plugs and socket-outlets complying with this document are suitable for use at ambient temperatures not normally exceeding +40 °C, but their average temperature over a period of 24 h does not exceed +35 °C, with a lower limit of the ambient air temperature of −5 °C.

2 Normative references

The following documents are referred to in the text in such a way that some or all of their content constitutes requirements of this document. For dated references, only the edition cited applies. For undated references, the latest edition of the referenced document (including any amendments) applies.

IEC 60068-2-30, *Environmental testing – Part 2-30: Tests – Test Db: Damp heat, cyclic (12 + 12 h cycle)*

IEC 60068-2-31, *Environmental testing – Part 2-31: Tests – Test Ec: Rough handling shocks, primarily for equipment-type specimens*

IEC 60068-2-75, *Environmental testing – Part 2-75: Tests – Test Eh: Hammer tests*

AVA Documents Document Sharing Hub

Full document details: IEC 60884-2-6 2025 EXV

IEC 60112, *Method for the determination of the proof and the comparative tracking indices of solid insulating materials*

IEC 60227 (all parts), *Polyvinyl chloride insulated cables of rated voltages up to and including 450/750 V*

IEC 60245 (all parts), *Rubber insulated cables – Rated voltages up to and including 450/750 V*

IEC 60417, *Graphical symbols for use on equipment* (available at http://www.graphical-symbols.info/equipment)

IEC 60423:2007, *Conduit systems for cable management – Outside diameters of conduits for electrical installations and threads for conduits and fittings*

IEC 60529:1989, *Degrees of protection provided by enclosures (IP Code)*
IEC 60529:1989/AMD1:1999
IEC 60529:1989/AMD2:2013

IEC 60669 (all parts), *Switches for household and similar fixed-electrical installations*

IEC 60669-1:2017, *Switches for household and similar fixed-electrical installations – Part 1: General requirements*

IEC 60669-2-1:2021, *Switches for household and similar fixed electrical installations – Part 2-1: Particular requirements – Electronic control devices*

IEC 60695-2-10:2021, *Fire hazard testing – Part 2-10: Glowing/hot-wire based test methods – Glow-wire apparatus and common test procedure*

IEC 60695-2-11:2021, *Fire hazard testing – Part 2-11: Glowing/hot-wire based test methods – Glow-wire flammability test method for end products (GWEPT)*

IEC 60884-1:2022, *Plugs and socket-outlets for household and similar purposes – Part 1: General requirements*

IEC 60884-2-1, *Plugs and socket-outlets for household and similar purposes – Part 2-1: Particular requirements for fused plugs*

IEC 61032:1997, *Protection of persons and equipment by enclosures – Probes for verification*

IEC 61058 (all parts), *Switches for appliances*

IEC 61545, *Connecting devices – Devices for the connection of aluminium conductors in clamping units of any material and copper conductors in aluminium bodied clamping units*

ISO/IEC Guide 51, *Safety aspects – Guidelines for their inclusion in standards*

ISO 1456:2009, *Metallic and other inorganic coatings – Electrodeposited coatings of nickel, nickel plus chromium, copper plus nickel and of copper plus nickel plus chromium*

ISO 2081:2018, *Metallic and other inorganic coatings – Electroplated coatings of zinc with supplementary treatments on iron or steel*

ISO 2093:1986, *Electroplated coatings of tin – Specification and test methods*

Documents
Document Sharing Hub

Full document details: IEC 60884-2-6 2025 EXV

3 Terms and definitions

For the purposes of this document, the following terms and definitions apply.

ISO and IEC maintain terminological databases for use in standardization at the following addresses:

- IEC Electropedia: available at http://www.electropedia.org/
- ISO Online browsing platform: available at http://www.iso.org/obp

NOTE 1 Where the terms "voltage" and "current" are used, they imply RMS values, unless otherwise specified.

NOTE 2 Throughout this document the word "earthing" is used for "protective earthing" unless otherwise stated.

NOTE 3 The term "accessory" is used as a general term covering plugs and socket-outlets; the term "portable accessory" covers plugs and portable socket-outlets. Examples of the use of accessories are shown in Figure 1 a).

NOTE 4 Throughout this document the term "socket-outlet" covers both fixed and portable socket-outlets, except where the reference is specific to one type or the other.

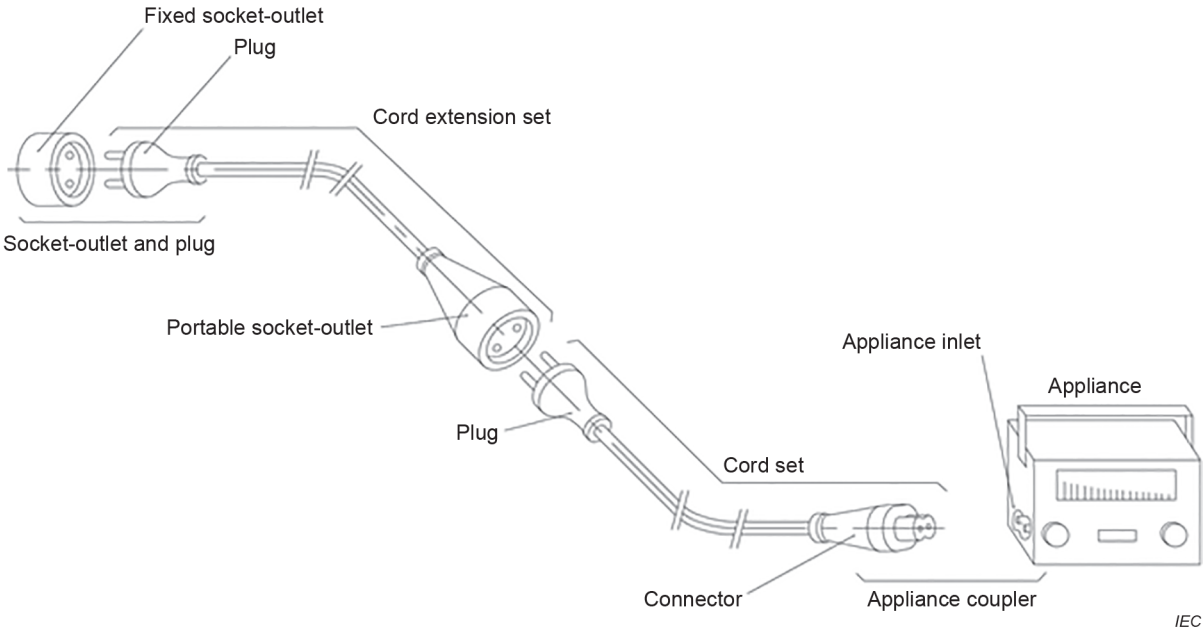

a) Diagram showing various accessories and their use

NOTE Appliance, appliance inlet and appliance coupler are used in this figure only for illustration purposes and they are not covered by this document.

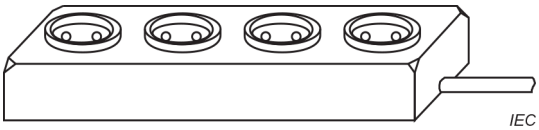

b) Example of a multiple socket-outlet

Figure 1 – Examples of accessories

3.1
plug
accessory having pins designed to engage with the contacts of a socket-outlet

Documents
Document Sharing Hub
Full document details: IEC 60884-2-6 2025 EXV

Note 1 to entry: A plug allows the manual connection and disconnection of an electrical load to an electrical supply by an ordinary person.

Note 2 to entry: The plug can be connected to a cable or integrated into an accessory.

Note 3 to entry: In adaptors, the plug can be integral or detachable, see IEC 60884-2-5.

Note 4 to entry: For special purposes such as lighting chains (see also IEC 60598-2-20), two or three single-core cables can be connected within the plug.

3.2
socket-outlet
accessory having socket-contacts designed to engage with the pins of a plug

Note 1 to entry: The socket-outlet can be connected to a cable or integrated into an accessory.

Note 2 to entry: In adaptors, the socket-outlet can be integral or detachable, see IEC 60884-2-5.

3.3
fixed socket-outlet
socket-outlet intended to be installed at a fixed location and be connected to fixed wiring

3.4
portable socket-outlet
socket-outlet intended to be connected to or integral with one flexible cable and which can easily be moved from one place to another while connected to the supply

3.5
multiple socket-outlets
combination of two or more socket-outlets

Note 1 to entry: An example is shown in Figure 1 b).

3.6
rewirable plug
plug so constructed that the flexible cable can be replaced

3.7
non-rewirable plug
assembly of the plug and the flexible cable so constructed that the flexible cable cannot be replaced

3.8
rewirable portable socket-outlet
socket-outlet so constructed that the flexible cable can be replaced

3.9
non-rewirable portable socket-outlet
assembly of the socket-outlet and the flexible cable so constructed that the flexible cable cannot be replaced

3.10
moulded-on accessory
non-rewirable portable accessory the manufacture of which is completed by insulating material moulded around pre-assembled component parts and the terminations for the flexible cable

[SOURCE: IEC 60050-442:1998, 442-01-14, modified – "portable" has been added to the definition and "or cord" has been omitted.]

Documents
Document Sharing Hub
Full document details: IEC 60884-2-6 2025 EXV

3.11
mounting box
box intended for mounting in or on a wall, floor or ceiling, etc., for flush or surface application, intended for use with fixed socket-outlet(s)

3.12
cord set
assembly consisting of a flexible cable or cord fitted with a non-rewirable plug and a non-rewirable connector, intended for the connection of an electrical appliance to the electrical supply

[SOURCE: IEC 60050-442:1998, 442-07-04, and IEC 60050-442:2008, 461-06-16]

3.13
cord extension set
assembly consisting of one flexible cable fitted with one plug and one single or multiple portable socket-outlets

3.14
terminal
insulated or non-insulated connecting device intended for reusable electrical connection of the external conductors

3.15
termination
insulated or non-insulated connecting device intended for non-reusable electrical connection of the external conductors

3.16
clamping unit
part(s) of the terminal necessary for the mechanical clamping and the electrical connection of the conductor(s), including the parts which are necessary to ensure correct contact pressure

[SOURCE: IEC 60050-442:1998, 442-06-12]

3.17
screw-type terminal
terminal for the connection and subsequent disconnection of one conductor or the interconnection and subsequent disconnection of two or more conductors, the connection being made, directly or indirectly, by means of screws or nuts of any kind

Note 1 to entry: Term entries 3.18 to 3.23 are examples of screw-type terminals.

3.18
pillar terminal
screw-type terminal in which the conductor is inserted into a hole or cavity, where it is clamped under the end of the screw or screws

Note 1 to entry: The clamping pressure may be applied directly by the end of the screw or through an intermediate clamping member to which pressure is applied by the end of the screw.

Note 2 to entry: Examples of pillar terminals are shown in Figure 9.

3.19
stirrup terminal
pillar terminal where the clamping pressure may be applied indirectly by an intermediate clamping member when the screw is tightened

Note 1 to entry: Examples of stirrup terminals are shown in Figure 9.

Documents
Document Sharing Hub

Full document details: IEC 60884-2-6 2025 EXV

3.20
screw head terminal
screw-type terminal in which the conductor is clamped under the head of the screw

Note 1 to entry: The clamping pressure may be applied directly to the head of a screw or through an intermediate part, such as a washer, clamping plate or anti-spread device.

Note 2 to entry: Examples of screw head terminals are shown in Figure 10.

3.21
stud terminal
screw-type terminal in which the conductor is clamped under a nut

Note 1 to entry: The clamping pressure may be applied directly by a suitably shaped nut or through an intermediate part, such as a washer, clamping plate or anti-spread device.

Note 2 to entry: Examples of stud terminals are shown in Figure 10.

3.22
saddle terminal
screw-type terminal in which the conductor is clamped under a saddle by means of two or more screws or nuts

Note 1 to entry: Examples of saddle terminals are shown in Figure 11.

3.23
mantle terminal
screw-type terminal in which the conductor is clamped against the base of a slot in a threaded stud by means of a nut

Note 1 to entry: The conductor is clamped against the base of the slot by a suitably shaped washer under the nut, by a central peg if the nut is a cap nut, or by equally effective means for transmitting the pressure from the nut to the conductor within the slot.

Note 2 to entry: Examples of mantle terminals are shown in Figure 12.

3.24
screwless-type terminal
connecting device for the connection and subsequent disconnection of a rigid (solid or stranded) or flexible conductor or the interconnection of two or more conductors, capable of being dismantled, the connection being made, directly or indirectly, by means of springs, parts of angled, eccentric or conical form, etc., without special preparation of the conductor concerned, other than removal of insulation

3.25
thread-forming screw
screw having an uninterrupted thread, which by screwing in, forms a thread by displacing material

Note 1 to entry: An example of a thread-forming screw is shown in Figure 2.

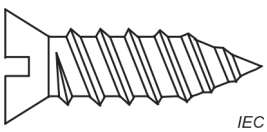

Figure 2 – Example of thread-forming screw

3.26
thread-cutting screw
screw having an interrupted thread, which by screwing in, forms a thread by removing material

Documents
Document Sharing Hub
Full document details: IEC 60884-2-6 2025 EXV

Note 1 to entry: An example of a thread-cutting screw is shown in Figure 3.

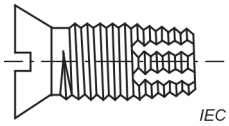

Figure 3 – Example of thread-cutting screw

3.27
rated voltage
voltage assigned by the manufacturer for a specified operating condition of an accessory

[SOURCE: IEC 60050-442:1998, 442-01-03, modified – The domain "(for accessories)" has been omitted.]

3.28
rated current
current assigned by the manufacturer for specified operating condition of an accessory

Note 1 to entry: Examples of the operating conditions are ambient condition, characteristics of the power supply, duty cycle or duty type.

[SOURCE: IEC 60050-442:1998, 442-01-02, modified – The domain "(for accessories)" has been omitted and the note to entry added.]

3.29
shutter
movable part incorporated into a socket-outlet arranged to shield at least the live socket-contacts automatically when the plug is withdrawn

3.30
type test
test of one or more devices made to a certain design to show that the design meets certain specifications

3.31
routine test
test to which each individual device is subjected during and/or after manufacture to ascertain whether it complies with certain criteria

3.32
base
part of the socket-outlet supporting the socket-contacts

3.33
live part
conductor or conductive part intended to be energized in normal use, including a neutral conductor, but by convention not a PEN conductor

Note 1 to entry: Live parts according to this document are always considered as hazardous with the exception of SELV circuits.

[SOURCE: IEC 60050-826:2004, 826-12-08, modified – "operation" has been replaced with "use"; "or PEM conductor or PEL conductor" and the note to entry omitted.]

Documents
Document Sharing Hub
Full document details: IEC 60884-2-6 2025 EXV

3.34
cable anchorage
part of an accessory which has the ability to limit the displacement of a fitted flexible cable against pull, push and turning forces

3.35
main part
assembly consisting of the base and other parts

Note 1 to entry: This assembly is not intended to be dismantled at any time after manufacture.

3.36
grommet
component used to support and protect the cable or conduit at the point of entry

Note 1 to entry: A grommet may also prevent the ingress of moisture or contaminants.

Note 2 to entry: Examples of membranes and grommets are shown in Figure 4.

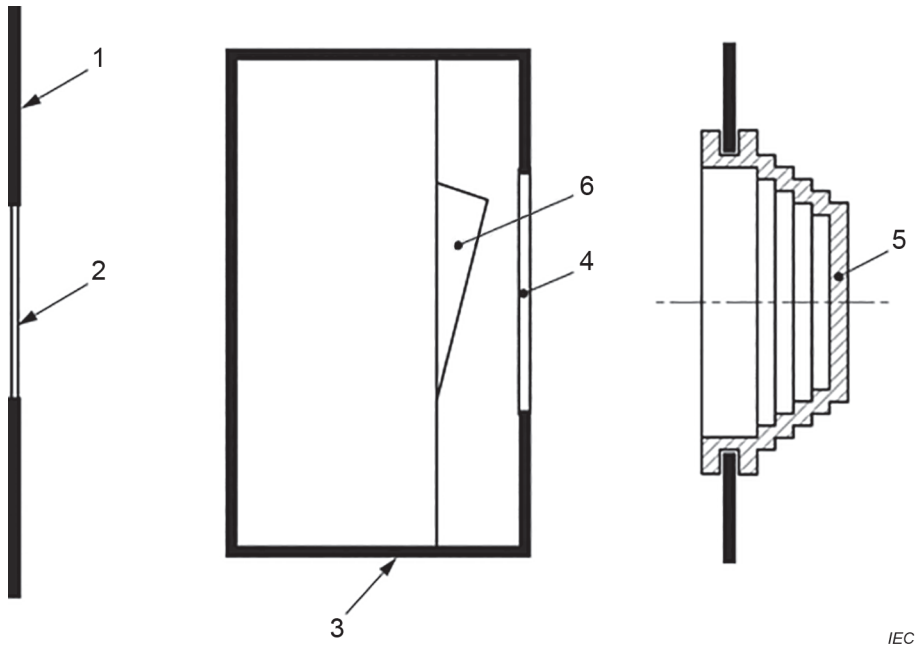

Key

1 Box
2 Entry membrane
3 Envelope
4 Protective membrane
5 Grommet
6 Switch

Figure 4 – Examples of membranes and grommets

3.37
entry membrane
component or integral part of the accessory used to protect the cable which may be used to support the cable or conduit at the point of entry

Note 1 to entry: An entry membrane may also prevent the ingress of moisture or contaminants and may be part of a grommet.

Note 2 to entry: Examples of membranes and grommets are shown in Figure 4.

Documents
Document Sharing Hub
Full document details: IEC 60884-2-6 2025 EXV

3.38
protective membrane
component or integral part of the accessory that is not intended to be penetrated in normal use and is intended to provide protection against ingress of water or solid objects and/or to allow the operation of an accessory

Note 1 to entry: Examples of membranes and grommets are shown in Figure 4.

3.39
normal load
load typically associated with household appliances

Note 1 to entry: Examples of normal loads:

– washing machines,
– refrigerators,
– clothes irons,
– vacuum cleaners,
– multimedia equipment.

3.40
high load
HL
load that applies long and repetitive cycles up to the rated current to the accessories exceeding normal load conditions

Note 1 to entry: Examples of applications having HLs are electric vehicle chargers and large terrace heaters.

3.41
crimped connection
permanent connection made by the application of pressure inducing the deformation or reshaping of the barrel around the conductor of a cable

Note 1 to entry: In some cases the deformation or reshaping of the barrel may affect the form of the conductor.

Note 2 to entry: Examples of crimped connections are shown in IEC 60352-2.

[SOURCE: IEC 60050-461:2008, 461-19-01, modified – Note 2 to entry has been added.]

3.42
pilot light
device incorporating a light source either integral or designed to be installed with the accessory and intended to give for example an indication of the accessory state or to indicate the accessory location

3.43
protective earthing
protective grounding, (US)
earthing for purposes of electrical safety

[SOURCE: IEC 60050-195:2021, 195-01-11]

3.44
functional earthing
earthing for purposes other than electrical safety

[SOURCE: IEC 60050-195:2021, 195-01-13, modified – The term "functional grounding" has been omitted.]

Documents
Document Sharing Hub
Full document details: IEC 60884-2-6 2025 EXV

3.45
stroke
insertion or withdrawal of the plug

3.101
interlock
device, either electrical or electronic or mechanical or a combination of these, which prevents the pins/contacts of a plug from becoming live before the plug is in proper engagement with a socket-outlet and which either prevents the plug from being withdrawn while its pin/contacts are live or makes the contacts of the socket-outlet dead before the plug is withdrawn

3.102
switched socket-outlet with interlock
factory assembled accessory consisting of a socket-outlet with an integral switching device controlling the socket-outlet, which is provided with an interlock

3.103
retaining device
mechanical arrangement which holds a plug in position when it is in proper engagement, and prevents its unintentional withdrawal

4 General requirements

Accessories and boxes of surface mounting accessories shall be so designed and constructed that, in normal use, their performance is reliable and safety is achieved by reducing risk to a tolerable level, as defined in ISO/IEC Guide 51.

NOTE In the following country, a load connected by plugs and socket-outlets for household and similar purposes shall not exceed an energy quantity of Emax = 7 360 VAh in 3 h: AT, DE.

Compliance is checked by meeting all the relevant requirements and tests specified.

5 General remarks on tests

5.1 General

Tests shall be carried out to prove compliance with the requirements laid down in this document, where applicable.

Tests are carried out as follows:

- *type tests shall be carried out on representative specimens of each accessory;*
- *routine tests shall be carried out on the accessory or on parts of the accessory according to the requirements given in this document.*

Subclauses 5.2 to 5.5 are applicable to type tests and 5.6 to routine tests.

5.2 Products arrangement during test

Unless otherwise specified, the specimens are tested as delivered and under normal conditions of use.

The neutral, if any, is treated as a pole.

Accessories having provision for pilot lights shall be tested with pilot lights fitted, unless otherwise stated. The results of the tests shall be considered to apply to socket-outlets of the same type which do not have this facility.

Documents
Document Sharing Hub
Full document details: IEC 60884-2-6 2025 EXV

Non-rewirable accessories are tested with the type and size of flexible cable as delivered. Non-rewirable accessories not incorporated in a cord set or a cord extension set, or which are not a component of equipment, shall be provided, for testing, with at least 1 m of flexible cable.

Non-rewirable multiple portable socket-outlets are tested with flexible cables as delivered.

Flush-type and semi-flush-type socket-outlets shall be tested, if appropriate, when installed in a box complying with the applicable standard sheet(s), if any. If the socket-outlet is manufactured for a specific box, the tests shall be conducted when the socket-outlet is installed in the corresponding box as specified by the manufacturer.

Socket-outlets which require a box to complete their enclosure are tested with their boxes.

The fixing screws of terminals, covers and cover-plates shall be tightened with a torque equal to two-thirds of the values specified in Table 7 unless otherwise specified.

5.3 Ambient test condition

Unless otherwise specified, the tests are carried out in the order of the clauses (see Table 1), at an ambient temperature between 15 °C and 35 °C.

It is recommended that the tests are carried out at an ambient temperature of (20 ± 5) °C.

5.4 Additional samples

A set of three specimens is subjected to all the relevant tests.

For the tests of Clauses 10, 12, 13, 20, 21, 23 and 24 additional specimens may be necessary.

For the test of Clause 15, it is possible that three additional specimens are necessary.

The number of specimens needed for the tests are given in Table 1.

Table 1 – Survey of specimens needed for tests

Clauses and subclauses		Number of specimens		
		Fixed socket-outlets	Portable socket-outlets	Plugs
6	Ratings	A	A	A
7	Classification	A	A	A
8	Marking	A	A	A
9	Checking of dimensions	ABC	ABC	ABC
10	Protection against electric shock[a]	ABC	ABC	ABC
11	Provision for earthing	ABC	ABC	ABC
12	Terminals	ABC[b, c]	ABC	ABC
13	Construction of fixed socket-outlets	ABC[d, e]	–	–
14	Construction of plugs and portable socket-outlets	–	ABC[d, e]	ABC[d, e]
15	Interlocked socket-outlets	ABC	ABC	–
16	Resistance to ageing, to harmful ingress of water and to humidity	ABC[f]	ABC	ABC
17	Insulation resistance and electric strength	ABC[g]	ABC[g]	ABC
18	Operation of earthing contacts	ABC	ABC	ABC

Documents
Document Sharing Hub

19	Temperature rise	ABC	ABC	ABC
20	Breaking capacity	ABC	ABC	ABC
21	Normal operation	ABC	ABC	ABC
22	Force necessary to withdraw the plug	ABC	ABC	–
23	Flexible cables and their connection	–	ABC[h]	ABC[h]
24	Mechanical strength	ABC[i k]	ABC[i]	ABC[j]
25	Resistance to heat[l]	ABC	ABC	ABC
26	Screws, current-carrying parts and connections	ABC	ABC	ABC
27	Creepage distances, clearances and distances through sealing compound	ABC	ABC	ABC
29	Resistance to rusting	ABC	ABC	ABC
28.1	Resistance to abnormal heat and to fire	DEF	DEF	DEF
28.2	Resistance to tracking[m]	DEF	DEF	DEF
30	Additional tests on pins provided with insulating sleeves	–	–	GHI[n]
	TOTAL	6	6	9

[a] One extra set of specimens is needed for the test of 10.6.

[b] One extra set of specimens is needed for each type of conductor for 12.2.6.

[c] One extra set of specimens may be required for the test of 12.3.10. Five extra screwless-type terminals are used for the test of 12.3.11 and one extra set of specimens is used for the test of 12.3.12.

[d] One extra set of membranes is needed for each of the tests of 13.22 and 13.23.

[e] One extra set of specimens may be needed to verify that the mechanical strength of the pin does not depend on the plastic material.

[f] One extra set of specimens is needed for 16.1.

[g] One extra set of specimens of socket-outlets fitted with pilot lamps may be used for the tests of Clause 17.

[h] One extra set of specimens is needed for 23.2 and 23.4 for non-rewirable accessories for each type of cable and cross-sectional area.

[i] One extra set of specimens is needed for 24.9 for shuttered socket-outlets.

[j] One extra set of specimens is needed for 24.11 for plugs.

[k] One extra set of specimens is needed for 24.13.2 and 24.13.3.

[l] One extra set of aged specimens may be used for the tests of 25.3 and 25.4.

[m] One extra set of specimens may be used.

[n] One extra set of specimens is needed for 30.2 and 30.3 for plugs with pins with insulating sleeves.

5.5 Compliance general requirement

The specimens are submitted to all the relevant tests and the requirements are satisfied if all the tests are met.

If one specimen does not satisfy a test due to an assembly or a manufacturing fault, that test and any preceding one which may have influenced the results of the test shall be repeated, and also the tests which follow shall be made in the required sequence on another full set of specimens, all of which shall comply with the requirements.

NOTE The applicant can submit, together with a number of specimens specified in 5.4, the additional set of specimens which can be required, should one specimen fail. The testing station will then, without further request, test the additional specimens and will only reject them if a further failure occurs. If the additional set of specimens is not submitted at the same time, the failure of one specimen will entail rejection.

Documents
Document Sharing Hub
Full document details: IEC 60884-2-6 2025 EXV

5.6 Routine tests

Routine tests for factory-wired portable accessories (protection against electric shock and correct polarity) are specified in Annex A.

NOTE Annex E provides routine tests that can be applied during the production of crimped connections in accessories.

6 Ratings

Accessories should preferably be of a type and preferably have a voltage and current rating as shown in Table 2.

Table 2 – Preferred combinations of types and ratings

Type		Rated voltage	Rated current
General, with P = pole	**Implementation**	V	A
2P (non-rewirable portable accessories)	L1 + L2 or L1 + N	130 or 250	2,5
2P	L1 + L2 or L1 + N	130 or 250	6
2P + ⏚	L1 + L2 + ⏚ or L1 + N + ⏚	130 or 250	6
2P	L1 + L2 or L1 + N	130 or 250	10 13 16 20 25 32
2P + ⏚	L1 + L2 + ⏚ or L1 + N + ⏚		
2P + ⏚	L1 + L2 + ⏚	400 or 440	10 13 16 20 25 32
3P + ⏚	L1 + L2 + L3 + ⏚		
3P + N + ⏚	L1 + L2 + L3 + N + ⏚		
NOTE 1 Standardized values and configurations of existing systems are reported in IEC/TR 60083. NOTE 2 L1 + L2 and L1 + N are examples, any combination of the 3 phases are possible. The phase contacts L1, L2, L3 and the neutral contact N, if any, are treated as pole and considered to be live. In some tables or tests, ⏚ is treated as a pole.			

NOTE 1 In the following countries fixed 2P socket-outlets are not allowed: AT, BR, DE, IT, GB, TR.

NOTE 2 In the following country, fixed 2P socket-outlets are allowed only under certain conditions as specified in the wiring code: BE, ZA (SANS 10142-1).

7 Classification

7.1 Accessories classification

7.1.1 Accessories are classified according to the degree of protection against access to hazardous parts and against harmful effects due to the ingress of solid foreign objects as described in IEC 60529.

AVA Documents
Document Sharing Hub

7.1.2 Accessories are classified according to the degree of protection against harmful effects due to the ingress of water as described in IEC 60529.

7.1.3 Classification according to the provision for earthing:

7.1.3.1 Accessories without earthing contact;

7.1.3.2 Accessories with earthing contact.

7.1.4 Classification according to the method of connecting the cable:

7.1.4.1 Rewirable accessories;

7.1.4.2 Non-rewirable accessories.

7.1.5 Classification according to the type of terminals:

7.1.5.1 Accessories with screw type terminals;

7.1.5.2 Accessories with screwless-type terminals;

7.1.5.3 Accessories with insulation piercing terminals (see Annex F).

NOTE In the following country accessories with screwless-type terminals for rigid conductors only are not allowed: ES, IT.

7.1.6 Classification according to the type of conductors to be connected:

7.1.6.1 For fixed socket-outlets with rigid (both solid and stranded) conductors only;

7.1.6.2 For fixed socket-outlets with rigid (both solid and stranded) and flexible conductors;

7.1.6.3 For portable accessories with flexible conductors only.

7.2 Socket-outlet classification

7.2.1 Classification according to the degree of protection against electric shock when mounted as for normal use:

7.2.1.1 with normal protection (see 10.2);

7.2.1.2 with increased protection (see 10.7).

7.2.2 Classification according to the existence of shutters:

7.2.2.1 without shutters;

7.2.2.2 with shutters (see 10.5).

NOTE In the following countries, socket-outlets without shutters are not allowed: FR, IT, ZA.

7.2.3 Classification according to the method of application/mounting type of the socket-outlet:

7.2.3.1 surface or

Documents
Document Sharing Hub

Full document details: IEC 60884-2-6 2025 EXV

7.2.3.2 flush, or

7.2.3.3 semi-flush, or

7.2.3.4 void

7.2.3.5 architrave, or

7.2.3.6 portable, or

7.2.3.7 furniture, or

7.2.3.8 floor recessed, or

7.2.3.9 appliance.

7.2.4 Classification according to the method of installation, as a consequence of the design:

7.2.4.1 fixed socket-outlets where the cover or cover-plate can be removed without displacement of the conductors (design A), or

7.2.4.2 fixed socket-outlets where the cover or cover-plate cannot be removed without displacement of the conductors (design B).

NOTE If a fixed socket-outlet has a base which cannot be separated from the cover or cover-plate, and requires a supplementary plate to meet the standard which can be removed for redecorating the wall without displacement of the conductors, it is considered to be of design A, provided the supplementary plate meets the requirements specified for covers and cover-plates.

7.2.5 Classification according to the intended use:

7.2.5.1 Socket-outlets for circuits where a single earthing circuit provides protective earthing for connected equipment and exposed conductive parts of the socket-outlet, if any;

7.2.5.2 Socket-outlets for circuits where electrical noise immunity is desired for the earthing circuit of connected equipment. The equipment earthing circuit is electrically separated from the protective earthing circuit provided for the exposed conductive parts of the socket-outlet, if any.

7.2.101 Switched socket-outlets with interlock are classified:

7.2.101.1 According to the method of actuating the switch:

– rotary;
– tumbler;
– rocker;
– push-button;
– touch;
– proximity;
– optical;
– acoustic;
– other external influences.

7.2.101.2 According to the number of poles of the switch:

Documents
Document Sharing Hub
Full document details: IEC 60884-2-6 2025 EXV

– single-pole;
– double-pole;
– three-pole;
– three-pole with neutral.

7.2.101.3 According to the type of interlock:

– mechanical;
– electrical;
– electronic;
– a combination of any of these.

7.2.101.4 According to the retaining device:

– without device;
– with device.

7.3 Plug classification according to the class of equipment to which they are intended to be connected

7.3.1 for equipment of class I;

7.3.2 for equipment of class II.

NOTE For the description of the classes of equipment, see IEC 61140.

8 Marking

8.1 General

Accessories shall be marked as follows:

– rated current in amperes;
– rated voltage in volts;
– symbol for nature of supply;
– the name, trademark or identification mark of the manufacturer or responsible vendor;
– type reference which may be a catalogue number;

NOTE 1 The type reference can be the series reference only.

– first characteristic numeral for the degree of protection against access to hazardous parts and against harmful effects due to ingress of solid foreign objects, if declared to be higher than 2, and for fixed socket-outlets higher than 4, in which case the second characteristic numeral shall also be marked;
– second characteristic numeral for the degree of protection against harmful effects due to ingress of water, if declared to be higher than 0, and for fixed socket-outlets higher than 2, in which case the first characteristic numeral shall also be marked.
– symbol of mini-gap construction, if applicable;
– symbol of micro-gap construction, if applicable;
– symbol for semiconductor switching device, if applicable.

NOTE 2 The degrees of protection are based on IEC 60529.

In addition, socket-outlets with screwless-type terminals shall be marked with the following:

– an appropriate marking indicating the length of insulation to be removed before the insertion of the conductor into the screwless-type terminal;

AVA Documents
Document Sharing Hub

– an indication of the suitability to accept rigid conductors only, for those socket-outlets having this restriction.

8.2 Symbols

When symbols are used, they shall be as follows:

Amperes ..... A

Volts V

Alternating current ..... ~ or AC

Neutral ..... N

Protective earth ..... ⏚

(IEC 60417-5019 (2006-08))

Degree of protection, when relevant ..... IPXX

Degree of protection for fixed accessories also able to be installed on rough surfaces

(test wall of Figure 18 b) and Figure 18 c)) ..... IPXX

(IEC 60417-6345 (2015-07))

For screwless-type terminals: suitability to accept rigid conductors only ..... r

Mini-gap construction ..... m

Micro-gap construction ..... μ

Semiconductor switching device ..... ε

"OFF" position ..... O

"ON" position I

NOTE 1 Details of construction of symbols are given in IEC 60417.

NOTE 2 In the IP code the letter "X" is replaced by the relevant number.

NOTE 3 Lines formed by the construction of the tool are not considered as part of the marking.

For the marking with rated current and rated voltage the values may be used alone. These values shall be placed on one line separated by an oblique line or the value for rated current shall be placed above the value for rated voltage, separated by a horizontal line.

The marking for the nature of supply shall be placed next to the marking for rated current and rated voltage.

NOTE 4 The marking for current, voltage and nature of supply can be, for example, as follows:

$$16\ \text{A}\ 440\ \text{V AC or } 16/440\ \text{AC or } \frac{16}{440}\sim$$

8.3 Particular requirements for fixed socket-outlets

For fixed socket-outlets the following marking shall be placed on the main part:

– rated current, rated voltage and nature of supply;

– either the name, trademark or identification mark of the manufacturer or of the responsible vendor;

– length of insulation to be removed before the insertion of the conductor into the screwless-type terminal;

Documents
Document Sharing Hub
Full document details: IEC 60884-2-6 2025 EXV

– an indication of the suitability to accept rigid conductors only for screwless-type terminals for those socket-outlets having this restriction;
– the type reference, which may be a catalogue number.

NOTE 1 The type reference can be the series reference only.

Parts such as cover plates, which are necessary for safety purposes and are intended to be sold separately, shall be marked with the manufacturer's or responsible vendor's name, trademark or identification mark and type reference.

NOTE 2 Additional type references can be marked on the main part, or on the outside of the associated enclosure.

The IP code, if applicable, shall be marked so as to be easily discernible when the socket-outlet is mounted and wired as for normal use.

Fixed socket-outlets classified according to 7.2.5.2 shall be identified by a triangle which shall be visible after installation unless the socket-outlets have an interface configuration which is different from that used in normal circuits.

NOTE 3 In the following countries an orange triangle is required by the national installation rules: CA, MX, US.

8.4 Particular requirements for portable accessories

For plugs and portable socket-outlets the marking specified in 8.1, other than the type reference, shall be easily discernible when the accessory is wired and assembled.

Plugs and portable socket-outlets for equipment of class II shall not be marked with the symbol for class II construction.

NOTE The type reference of rewirable portable accessories can be marked on the inside of the enclosure or cover.

8.5 Particular requirements for markings on terminals other than phase terminals

Terminals intended exclusively for the neutral conductor shall be indicated by the letter N.

Earthing terminals for the connection of the protective conductor shall be indicated by the symbol ⏚.

These markings shall not be placed on screws, or any other easily removable parts.

NOTE "Easily removable parts" are those parts which can be removed during the normal installation of the socket-outlet or the assembly of the plug.

Terminations in non-rewirable accessories need not be marked.

Terminals provided for the connection of conductors not forming part of the main function of the socket-outlets shall be clearly identified unless their purpose is self-evident, or indicated in a wiring diagram which shall be fixed to the accessory.

The indication of such terminals may be achieved by:

– their being marked with graphical symbols according to IEC 60417 or with colours and/or an alphanumeric system, or
– their being marked with their physical dimensions or relative location.

Leads of pilot lights are not considered to be conductors in the context of this subclause.

Documents
Document Sharing Hub
Full document details: IEC 60884-2-6 2025 EXV

8.6 IP code marking for surface-type mounting boxes forming an integral part of socket-outlets

For surface-type mounting boxes forming an integral part of socket-outlets having an IP code higher than IP4X, or higher than IPX2, the IP code shall be marked on the outside of their associated enclosure so as to be easily discernible when the socket-outlet is mounted and wired as in normal use.

8.7 Additional requirement for marking

It shall be indicated either by marking or in a manufacturer's catalogue or instruction sheet which position or with which special provisions (for example, box, type of mounting surface, plug, etc.) the declared degree of protection of fixed socket-outlets having an IP code higher than IPX0 is ensured, unless this is self-evident.

Compliance is checked by inspection.

8.8 Durability

Marking shall be easily legible, durable and indelible.

Laser marking directly on the product and marking made by moulding, pressing or engraving are not subjected to this test.

Compliance is checked by inspection, using normal or corrected vision, without additional magnification and, if necessary, by the following test.

The test is done by rubbing the marking for 15 s with a piece of cotton cloth soaked with water and again for 15 s with a piece of cotton cloth soaked with n-hexane 95 % (Chemical Abstracts Service Registry Number, CAS RN, 110-54-3).

NOTE n-hexane 95 % (Chemical Abstracts Service Registry Number, CAS RN, 110-54-3) is available from a variety of chemical suppliers as a high pressure liquid chromatography (HPLC) solvent.

When using the liquid specified for the test, precautions as stated in the relative material safety datasheet provided by the chemical supplier shall be taken to safeguard the laboratory technicians.

The marking surface to be tested shall be dried after the test with water.

Rubbing shall commence immediately after soaking the piece of cotton, applying a compression force of (5 ± 1) N at a rate of about one cycle per second (a cycle comprising a forward and backward movement along the length of the marking). For markings longer than 20 mm, rubbing can be limited to a part of the marking, over a path of at least 20 mm length.

The compression force is applied by means of a test piston which is wrapped with cotton comprising cotton wool covered by a piece of cotton medical gauze.

The test piston shall have the dimensions specified in Figure 5 and shall be made of an elastic material which is inert against the test liquids and has a Shore-A hardness of 47 ± 5 (for example synthetic rubber).

Documents
Document Sharing Hub
Full document details: IEC 60884-2-6 2025 EXV

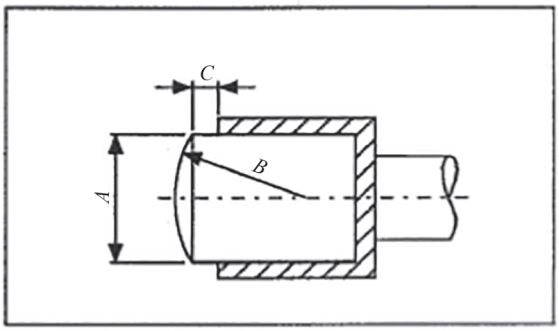

Dimensions mm			
°	A	B	C
Dimensions	20	20	2
Tolerance	+2, −0	±0,5	+1, −0

Figure 5 – Test piston dimensions

When it is not possible to carry out the test on the specimens due to the shape/size of the product or the marking is not accessible with the test piston:

– *a suitable piece having the same characteristics as the product can be submitted to the test*

or

– *another test piston with different shape can be used on the condition that radius B is kept.*

8.101 Identification of line terminals

Terminals of switched socket-outlets with interlock intended for the connection of the phase conductors shall be identified, unless the method of connection is of no importance or is self-evident or is indicated in a wiring diagram. Such identification may take the form of a letter L or in the case of more than one terminal, the letters L_1, L_2, L_3, etc., which may be accompanied by an arrow pointing to the relevant terminal(s).

Alternatively, the surface of such terminals shall be bare brass or copper, other terminals being covered with a metallic layer of another colour.

These indications shall not be placed on screws or any other easily removable parts.

8.102 Indication of the actual switch position

Switched socket-outlets with interlock shall be so marked that the direction of movement of the actuating member to its different positions or the actual switch position, is clearly indicated.

These indications shall be clearly visible on switched socket-outlets with interlock fitted with their cover or cover plate as for normal use. If these indications are placed on the cover or cover plate, it shall not be possible to fix the cover or cover plate in a position such that the indications are incorrect.

For indicating the direction of movement of the operating means, the symbols "O" and " I " may be used.

The short, straight line indicating the "ON" position shall be radial for rotary switches, perpendicular to the axis of rotation of the dolly for tumbler switches and rocker switches, and vertical for push-button switches when mounted vertically in its intended position.

Documents
Document Sharing Hub
Full document details: IEC 60884-2-6 2025 EXV

9 Checking of dimensions

9.1 General

Accessories and surface-type mounting boxes shall comply with the appropriate standard sheets and corresponding gauges for plugs and socket-outlets systems, if any.

Insertion of plugs into fixed or portable socket-outlets shall be ensured by their compliance with the relevant standard sheets.

Compliance is checked as follows.

Socket-outlets are first subjected to 10 insertions and 10 withdrawals of a plug complying with the corresponding standard sheet having the maximum dimensions for the pins following which dimensions are checked by measurement and/or by means of gauges.

The manufacturing tolerances of these gauges shall be as shown in Table 3 if not otherwise specified. The most unfavourable dimensions of the standard sheet shall be used for the design of the gauges.

NOTE In some cases (for example, distances between centres), it can be necessary to check both the extreme dimensions.

Moreover, for shuttered socket-outlets, to ascertain the easy insertion of a plug in the corresponding socket-outlet the test as described in 22.4 shall be carried out on the same samples after the 10 insertions and withdrawals have been performed.

Table 3 – Gauge tolerances

Gauge for checking	Gauge tolerance mm
Pin diameter or pin thickness	$^{0}_{-0,01}$
Dimension of entry holes corresponding to pin diameter and to distance between contact surfaces	$^{+0,01}_{0}$
Pin length and width	$^{0}_{-0,1}$
Pin spacing	$^{0}_{-0,02}$ or $^{+0,02}_{0}$ (according to the case)
Distance from the engagement face to point of first electrical contact (for socket-outlet)	$^{0}_{-0,05}$ or $^{+0,05}_{0}$ (according to the case)
Guiding elements	±0,03

9.2 Dangerous compatibility

It shall not be possible, within a given system, to engage a plug with:

– a socket-outlet having a higher voltage rating or a lower current rating;

– a socket-outlet with a different number of live poles; exceptions may be admitted for socket-outlets which are specially constructed for the purpose of allowing engagement with plugs of a lower number of poles, provided that no dangerous situation can arise, for example a connection between a live pole and an earthing contact or the interruption of the earthing circuit;

– a socket-outlet with earthing contact, if the existing plug of the relevant national system is a plug for class 0 equipment.

AVA Documents
Document Sharing Hub
Full document details: IEC 60884-2-6 2025 EXV

It shall not be possible to engage existing plugs on the relevant national system for equipment of class 0 or of class I with a socket-outlet exclusively designed to accept plugs for class II equipment.

Compliance is checked by inspection or by manual test using gauges, the manufacturing tolerances of which shall be as specified in Table 3.

In case of doubt, the impossibility of insertion is checked by applying the appropriate gauge for 1 min with a force of 150 N for accessories with a rated current not exceeding 16 A, or 250 N for other accessories.

Where the use of elastomeric or thermoplastic material is likely to influence the result of the test, it is carried out at an ambient temperature of (35 ± 2) °C, both the accessories and the gauges being at this temperature.

NOTE For accessories of rigid material, such as thermosetting resins, ceramic material and the like, conformity to the relevant standard sheets ensures compliance with the requirement.

9.3 Permitted deviations

Deviations from the dimensions specified in the standard sheets may be made, but only if they provide a technical advantage and do not adversely affect the purpose and safety of accessories complying with the standard sheet, especially with regard to interchangeability and non-interchangeability.

Accessories with such deviations shall, however, comply with all applicable requirements.

10 Protection against electric shock

10.1 General

Accessories shall ensure protection against electric shock.

For the purposes of this Clause 10, lacquer, enamel and sprayed insulating coatings are not considered as insulating material.

10.2 Accessibility of live parts during normal use

Fixed socket-outlets, plugs when engaged and portable socket-outlets shall be so designed and constructed that when they are mounted and/or wired as for normal use, live parts are not accessible, even after removal of parts which can be removed without the use of a tool.

Live parts of plugs shall not be accessible when the plug is in partial or complete engagement with a socket-outlet.

NOTE In the following countries this requirement does not apply when the plug is partially engaged: CA, CN, DK, JP, US.

Compliance is checked by inspection and, if necessary, by the following test.

The test is carried out on the specimen mounted as for normal use and fitted with conductors of the smallest nominal cross-sectional area, the test being then repeated using conductors of the largest nominal cross-sectional area, specified in Table 4 for screw-type terminals and Table 8 for screwless-type terminals.

The standard test finger, test probe B of IEC 61032, is applied in every possible position, an electrical indicator with a voltage between 40 V and 50 V being used to show contact with the relevant parts.

Documents
Document Sharing Hub
Full document details: IEC 60884-2-6 2025 EXV

For plugs, the test finger is applied when the plug is in partial and complete engagement with a socket-outlet.

For accessories where the use of thermoplastic or elastomeric material is likely to influence the requirements, one additional test is made but at an ambient temperature of (35 ± 2) °C, the accessories being at this temperature.

During this additional test the accessories are subjected for 1 min to a force of 75 N, applied through the tip of a straight unjointed test finger, test probe 11 of IEC 61032. This finger with an electrical indicator as described above is applied to all places where yielding of insulating material could impair the safety of the accessory but is not applied to membranes or the like. The finger as described is applied to thin-walled knock-outs but with a force of 10 N.

During this test, accessories, with their associated mounting means, shall not deform to such an extent that those dimensions shown in the relevant standard sheets which ensure safety are unduly altered and no live parts shall be accessible.

Each specimen of plug or portable socket-outlet is then pressed between two flat surfaces with a force of 150 N for 5 min, as shown in Figure 6. The specimen is checked 15 min after removal from the test apparatus, and shall not show such deformation as would result in undue alteration of those dimensions shown in the relevant standard sheets which ensure safety.

Dimensions in millimetres

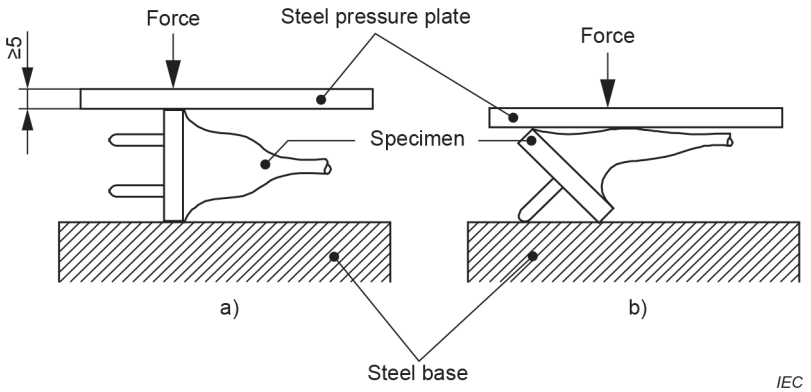

Figure 6 – Arrangement for compression test

10.3 Requirements for accessible parts of accessory during normal use

10.3.1 Accessible parts of the accessory when wired and/or mounted as in normal use shall be made of insulating material with the exception of the following:

– small screws and the like which are isolated from live parts and which are used for the fixing of the main part and of covers, cover plates or other parts of the enclosure of socket-outlets;
– the covers, cover plates and other parts of the enclosure of fixed socket-outlets and accessible parts of portable socket-outlets and plugs made of metal which comply with the requirements of 10.3.2 or 10.3.3;
– earthing pins and earthing straps of accessories;
– current-carrying pins and metal shoulders around pins of plugs when not inserted in a socket-outlet.

Compliance is checked by inspection.

10.3.2 Covers, cover plates or other parts of the enclosure of metal shall be protected by additional insulation made by insulating linings or insulating barriers. The insulating linings or insulating barriers shall either:

AVA Documents Document Sharing Hub

– be fixed to covers, cover plates, other parts of the enclosure or the body of the accessory in such a way that they cannot be removed without being permanently damaged, or
– be so designed that:
  - they cannot be replaced in an incorrect position;
  - if they are omitted, the accessories are rendered inoperable or manifestly incomplete;
  - there is no risk of accidental contact between live parts and metal covers, cover plates or other parts of the enclosure, for example through their fixing screws, even if a conductor should come away from its terminal;
  - precautions are taken in order to prevent creepage distances or clearances becoming less than the values specified in Table 26.

In the case of single-pole insertion, the requirement given in 10.4 applies.

Compliance is checked by inspection.

The above linings or barriers shall comply with the tests of Clause 17 and Clause 27.

10.3.3 The earthing of metal covers or cover plates can be made with fixing screws or other integral means, the resulting connection shall be of low resistance.

The creepage distances and the clearances between the live pins of a plug when fully inserted and the earthed metal cover of a socket-outlet shall comply with items 2 and 7 of Table 26, respectively; in addition, in the case of single-pole insertion, the requirement given in 10.4 applies.

NOTE In the following countries 10.3.3 is not allowed: DK (only IPX0 equipment).

Compliance is checked by inspection and by the tests of 11.5.

10.4 Single-pole insertion

It shall not be possible for a pin of a plug to come into contact with a live socket-contact of a socket-outlet while any other pin is accessible.

Compliance is checked by manual test and by means of gauges based on the most unfavourable dimensions of the standard sheet; the tolerances of the gauges shall be as specified in Table 3.

For accessories with enclosures or bodies of thermoplastic material, the test is carried out at an ambient temperature of (35 ± 2) °C, both the accessory and the gauge being at this temperature.

For socket-outlets with enclosures or bodies of rubber or polyvinyl chloride, the gauge is applied with a force of 75 N for 1 min.

For socket-outlets provided with metal covers or cover-plates, a clearance, between a pin and a socket-contact, of at least 2 mm is required, when another pin is or other pins are in contact with the metal covers or cover-plates.

Single-pole insertion may be prevented by the use of at least one of the following means:

– *a sufficiently large cover or cover-plate;*
– *other means (for example, shutters).*

NOTE In the following countries the use of a shutter as the only means to prevent single-pole insertion is not allowed: AT, AU, BE, CA, CZ, DE, ES, FI, NL, PT, GB, US, TR.

Documents
Document Sharing Hub
Full document details: IEC 60884-2-6 2025 EXV

10.5 Shuttered socket-outlets

Shuttered socket-outlets shall, in addition, be so constructed that live parts are not accessible without a plug in engagement, with the gauges shown in Figure 7 and Figure 8.

The gauges shall be applied to the entry holes corresponding to the live contacts only and shall not touch live parts.

To ensure this degree of protection, socket-outlets shall be so constructed that live contacts are automatically screened when the plug is withdrawn.

Shutters shall be so designed that a plug is inserted with the same movement in a socket-outlet with shutters as in a socket-outlet without shutters.

The means for achieving this shall be such that such means cannot easily be operated by anything other than a plug and shall not depend upon parts which are liable to be lost.

An electrical indicator with a voltage between 40 V and 50 V included is used to show contact with the relevant part.

Compliance is checked by inspection and for socket-outlets with a plug completely withdrawn by applying the above gauges as follows.

The gauge according to Figure 7 is applied to the entry holes corresponding to the live contacts with a force of 20 N.

The gauge is applied to the shutters in the most unfavourable position, successively in three directions, to the same place for approximately 5 s in each of the three directions.

During each application the gauge shall not be rotated and it shall be applied in such a way that the 20 N force is maintained. When moving the gauge from one direction to the next, no force is applied but the gauge shall not be withdrawn.

A steel gauge, according to Figure 8, is then applied with a force of 1 N and in three directions, for approximately 5 s in each direction, with independent movements, withdrawing the gauge after each movement.

For socket-outlets with enclosures or bodies of thermoplastic material, the test is carried out at an ambient temperature of (35 ± 2) °C, both the socket-outlets and the gauge being at this temperature.

Documents
Document Sharing Hub
Full document details: IEC 60884-2-6 2025 EXV

Dimensions in millimetres

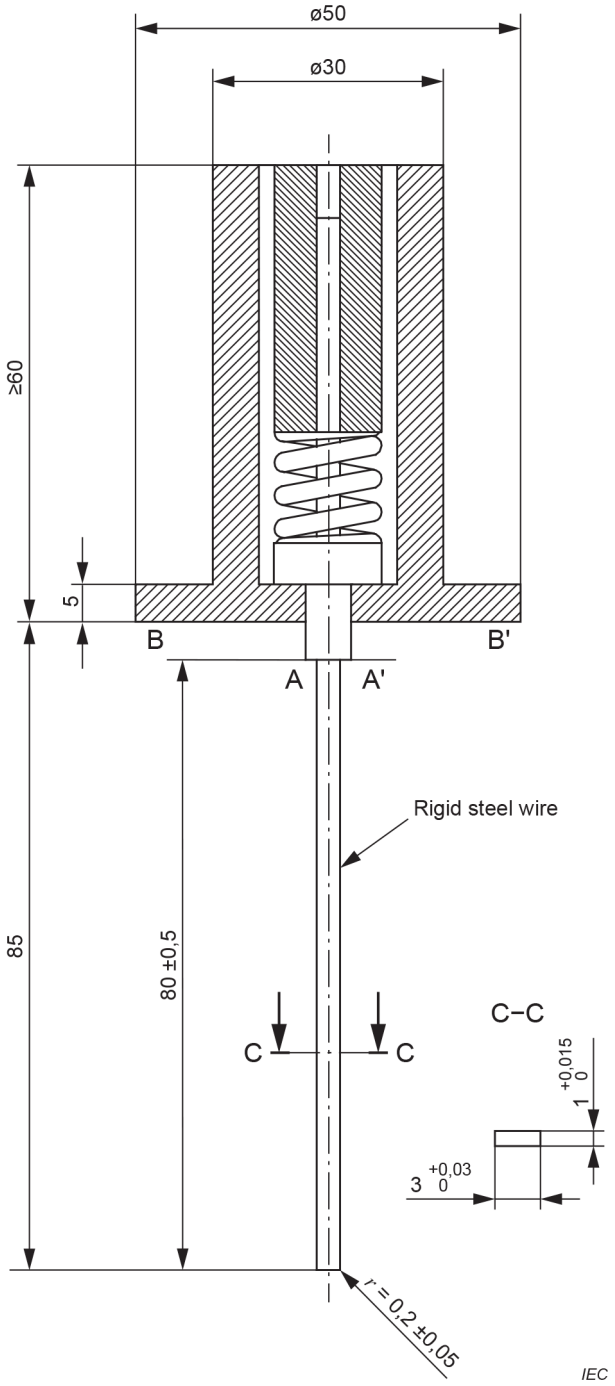

To calibrate the gauge, a push force of 20 N is applied on the steel rigid wire in the direction of its axis: the characteristics of the gauge internal spring shall be such that the surface A – A′ is brought practically to the same level as the surface B – B′ when this force is applied.

Figure 7 – Gauge for checking non-accessibility of live parts, through shutters

Documents
Document Sharing Hub
Full document details: IEC 60884-2-6 2025 EXV

Dimensions in millimetres

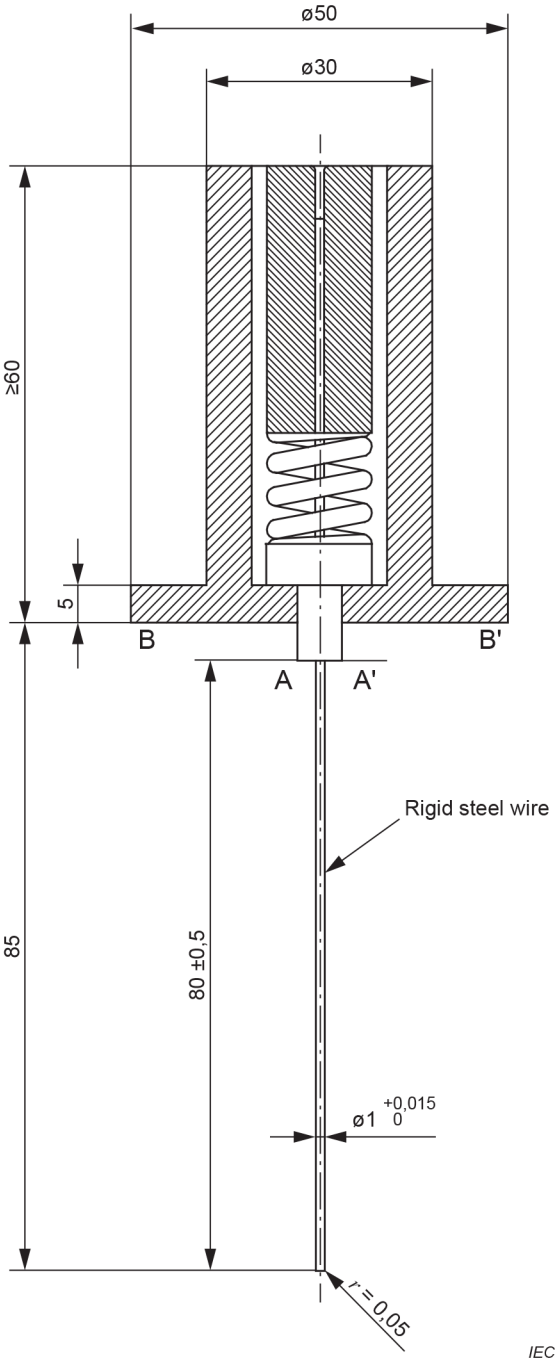

To calibrate the gauge, a push force of 1 N is applied on the steel rigid wire in the direction of its axis: the characteristics of the gauge internal spring shall be such that the surface A – A′ is brought practically to the same level as the surface B – B′ when this force is applied.

Figure 8 – Gauge for checking non-accessibility of live parts, through shutters, and of live parts of socket-outlets with increased protection

10.6 Deformation of earthing contacts

Earthing contacts, if any, of a socket-outlet shall be so designed that they cannot be deformed by the insertion of a plug to such an extent that safety is impaired.

Compliance is checked by the following test, carried out on a new set of specimens.

Documents
Document Sharing Hub
Full document details: IEC 60884-2-6 2025 EXV

The socket-outlet is placed in such a position that the socket-contacts are in a vertical position.

A test plug, having the dimensions of the corresponding standard sheet, is inserted into the socket-outlet with a force of 150 N which is applied for 1 min.

In addition, in the case of a socket-outlet with an earth pin, a force of 150 N is applied axially to the earth pin for 1 min.

After this test, the socket-outlet shall still comply with the requirements of Clause 9.

10.7 Socket-outlets with increased protection

Socket-outlets with or without lid, classified according to 7.2.1.2, shall be so constructed that, when mounted and wired as in normal use, live parts shall not be accessible with a test wire of 1 mm in diameter (see Figure 8).

NOTE In the following countries the increased protection is considered fulfilled when the lid (spring loaded) is closed: AT, DE.

Compliance is checked by applying with a test wire of 1,0 mm in diameter (see Figure 8) a force of 1 N on all accessible surfaces in the most unfavourable conditions without a plug inserted and with the lid, if any, open.

For socket-outlets with enclosures or bodies of thermoplastic material, the test is carried out at an ambient temperature of (35 ± 2) °C, both the socket-outlets and the gauge being at this temperature.

During this test, it shall not be possible to touch live parts with the gauge.

An electrical indicator as described in 10.2 shall be used.

10.101 Requirements for operating parts

Knobs, operating levers, push-buttons, rockers and the like, for operating switches in switched socket-outlets with interlock shall be of insulating material, unless their accessible metal parts are separated from the metal parts of the mechanism by double insulation or reinforced insulation, or in the case of switched socket-outlets with interlock with earthing terminals, they are reliably connected to earth.

Compliance is checked by inspection and by the tests of Clause 17 and Clause 21.

10.102 Requirements for accessible metal parts (protrusion from enclosure)

Metal parts of the switch mechanism, such as the spindle or the pivot of the dolly or rocker, that are not insulated from live parts, shall not protrude from the enclosure.

Compliance is checked by inspection. If necessary, the actuating member may be removed or broken.

If the actuating member has to be broken, compliance is checked after the test of Clause 28.

10.103 Requirements for accessible metal parts (accessibility)

Metal parts of the switch mechanism, such as the spindle or the pivot of the dolly or rocker, shall not be accessible when the switched socket-outlet with interlock is mounted as for normal use.

Documents
Document Sharing Hub

Full document details: IEC 60884-2-6 2025 EXV

In addition, these metal parts shall be insulated from accessible metal parts, including metal frames supporting the base of flush-type switched socket-outlets with interlock, liable to be mounted in a metal box, and also from screws used for fixing the base to its support.

This additional requirement does not apply if the metal parts of the mechanism are separated from live parts in such a way that the creepage distances and clearances have at least twice the values specified in 27.1, or as an alternative for switched socket-outlets with interlock provided with earthing terminals, if they are reliably connected to earth.

Compliance is checked by inspection. If necessary, measurement and the tests of Clause 17 and Clause 20 may be used.

11 Provision for earthing

11.1 General

Accessories with earthing contacts shall be so constructed that when inserting the plug the earth connection is made before the current-carrying contacts of the plug become live.

When withdrawing the plug, the current-carrying pins shall separate before the earth connection is broken.

Socket-outlets are tested using a test plug having the dimensions of the corresponding standard sheets.

When inserting the test plug, the earth contact of the plug shall make connection with the earth contact of the socket-outlet before the current-carrying contacts of the plug become live.

When withdrawing the test plug, the current-carrying pins of the plug shall separate before the earth connection is broken.

The insertion and withdrawal of the test plug shall be in a direction perpendicular to the engagement face of the socket-outlet. An electrical indicator supplied with a voltage between 40 V and 50 V is used to check that the earth contact makes first and breaks last.

11.2 Earthing terminals

Earthing terminals of rewirable accessories shall comply with the appropriate requirements of Clause 12.

Earthing terminals of rewirable accessories shall be of the same size as the corresponding terminals for the supply conductors.

Earthing terminals of rewirable accessories with earthing contact shall be internal.

Fixed socket-outlets can have an additional external earthing terminal.

Earthing terminals of fixed socket-outlets shall be fixed to the base or to a part reliably fixed to the base.

Earthing contacts of fixed socket-outlets shall be fixed to the base or to the cover, but, if fixed to the cover, they shall be automatically and reliably connected to the earthing terminal when the cover is put in place, the contact pieces being silver-plated or having a protection no less resistant to corrosion and abrasion.

Documents
Document Sharing Hub
Full document details: IEC 60884-2-6 2025 EXV

This connection shall be ensured under all conditions which may occur in normal use, including loosening of cover-fixing screws, careless mounting of the cover, etc.

Except as mentioned above, parts of the earthing circuit shall be in one piece or shall be reliably connected together by riveting, welding, or the like.

NOTE 1 The requirement regarding the connection between an earthing contact fixed to a cover and an earthing terminal can be met by the use of a solid pin and a resilient socket-contact.

NOTE 2 For the purpose of the requirements of this Subclause 11.2, screws are not considered as parts of contact pieces.

NOTE 3 When considering the reliability of the connection between parts of the earthing circuit, the effect of possible corrosion is taken into account.

11.3 Accessible metal parts

Accessible metal parts of accessories with earthing contact, which may become live in the event of an insulation fault, shall be permanently and reliably connected to the earthing terminal.

This requirement does not apply to the accessible metal parts mentioned in 10.3.2.

For the purpose of this requirement, small screws and the like, electrically separated from live parts, for fixing main parts, covers, or cover-plates, are not considered as accessible parts which may become live in the event of an insulation fault.

11.4 Requirements for socket-outlets having an IP code higher than IPX0

Socket-outlets, having an IP code higher than IPX0, with an enclosure of insulating material, having more than one cable inlet, shall be provided with an internal fixed earthing terminal or adequate space for a floating terminal allowing the connection of an incoming and an outgoing conductor for the continuity of the earthing circuit unless the earthing terminal of the socket-outlet itself is so designed that it allows the connection of an incoming and an outgoing earthing conductor.

Floating terminals are not subject to the requirements of Clause 12.

Compliance with 11.2 to 11.4 is checked by inspection and by the tests of Clause 12.

Compliance with requirements to ensure adequate space for floating terminals is checked by performing a test connection using the type of terminal specified by the manufacturer.

11.5 Internal connection with the earthing terminal

The connection between the earthing terminal and accessible metal parts to be connected thereto, shall be of low resistance.

Compliance is checked by the following test.

A current derived from an AC or DC source having a no-load voltage not exceeding 12 V and equal to 1,5 times the rated current or 25 A, whichever is the greater, is passed between the earthing terminal and each of the accessible metal parts in turn.

The voltage drop between the earthing terminal and the accessible metal part is measured, and the resistance calculated from the current and this voltage drop.

In no case shall the resistance exceed 0,05 Ω.

Documents
Document Sharing Hub
Full document details: IEC 60884-2-6 2025 EXV

Care should be taken that the contact resistance between the tip of the measuring probe and the metal part under test does not influence the test results.

11.6 Particular requirements for socket-outlets according to 7.2.5.2

Socket-outlets according to 7.2.5.2, for use on circuits where electrical noise immunity is desired for connected equipment, shall have the earthing socket-contact and its terminal electrically separated from any metal mounting means or other exposed conductive parts which may be connected to the protective earthing circuit of the installation.

Compliance is checked by inspection.

12 Terminals and terminations

12.1 General

All the tests on terminals, with the exception of the tests of 12.3.11 and 12.3.12 shall be carried out after the tests of 16.1.

Rewirable accessories shall be provided with terminals having screw clamping or with screwless-type terminals.

If pre-soldered flexible conductors are used, care shall be taken that in screw-type terminals the pre-soldered area shall be outside the clamp area when connected as for normal use.

The means for clamping the conductors in the terminals shall not serve to fix any other component, although they may hold the terminals in place or prevent them from turning.

Non-rewirable accessories shall be provided with soldered, welded, crimped or equally effective permanent connections (termination); screwed or snap-on connections shall not be used.

Connections made by crimping a pre-soldered flexible conductor are not permitted, unless the soldered area is outside the crimping area.

Compliance is checked by inspection and by the tests of 12.2 or 12.3, as applicable.

12.2 Terminals with screw clamping for external copper conductors

12.2.1 Terminals with screw clamping may be of the type suitable for rigid copper conductors only or of the type suitable for both rigid and flexible copper conductors having cross-sectional areas as shown in Table 4.

Terminals with screw clamping for rewirable portable accessories shall be of the type suitable for flexible copper conductors having cross-sectional areas as shown in Table 4.

Table 4 – Relationship between rated current and connectable nominal cross-sectional areas of copper conductors

Current and type of accessory	Rigid (solid or stranded) copper conductors		Flexible copper conductors	
	Nominal cross-sectional area	Diameter of the largest conductor	Nominal cross-sectional area	Diameter of the largest conductor
	mm^2	mm	mm^2	mm
6 A	–	–	From 0,75 up to 1,5 inclusive	1,73

Documents
Document Sharing Hub
Full document details: IEC 60884-2-6 2025 EXV

Current and type of accessory	Rigid (solid or stranded) copper conductors		Flexible copper conductors	
	Nominal cross-sectional area	Diameter of the largest conductor	Nominal cross-sectional area	Diameter of the largest conductor
	mm^2	mm	mm^2	mm
10 A 3P + N + ⏚ (fixed accessory)	From 1 up to 2,5 inclusive [a]	2,13	From 1 up to 2,5 inclusive [a]	2,21
10 A 3P + N + ⏚ (portable accessory)	–	–	From 0,75 up to 1,5 inclusive	1,73
10 A and 13 A 2P and 2P + ⏚ (fixed accessory)	From 1 up to 2,5 inclusive [a b]	2,13	From 1 up to 2,5 inclusive [a b]	2,21
10 A and 13 A 2P and 2P + ⏚ (portable accessory)	–	–	From 0,75 up to 1,5 inclusive	1,73
13 A 2P and 2P + ⏚ (fixed accessory) (Socket-outlets for fused plugs)	From 1,5 up to 3 × 2,5 [b] From 1,5 up to 2 × 4 [b]	2,72	From 1,5 up to 3 × 2,5 [b] From 1,5 up to 2 × 4 [b]	2,9
13 A 2P and 2P + ⏚ (portable accessory) (fused plugs)	–	–	From 0,5 up to 1,5	1,73
16 A 2P and 2P + ⏚ (fixed accessory)	From 1,5 up to 2 × 2,5 inclusive	2,13	From 1,5 up to 2 × 2,5 inclusive	2,21
16 A 2P and 2P + ⏚ (plugs)	–	–	From 0,75 up to 1,5 inclusive	1,73
16 A 2P and 2P + ⏚ (portable socket-outlets)	–	–	From 1 up to 1,5 inclusive	1,73
16 A other than 2P and 2P + ⏚ (fixed accessory)	From 1,5 up to 4 inclusive	2,72	From 1,5 up to 4 inclusive	2,9
16 A other than 2P and 2P + ⏚ (portable accessory)	-	-	From 1 up to 2,5 inclusive	2,21
20 A (fixed accessory)	From 2,5 up to 4 inclusive	2,72	From 2,5 up to 4 inclusive	2,9
20 A (portable accessory)	-	-	From 2,5 up to 4 inclusive	2,9
25A 2P + ⏚ (fixed accessory)	From 2,5 up to 6 inclusive	3,47	From 2,5 up to 6 inclusive	3,87

AVA Documents
Document Sharing Hub
Full document details: IEC 60884-2-6 2025 EXV

Current and type of accessory	Rigid (solid or stranded) copper conductors		Flexible copper conductors	
	Nominal cross-sectional area	Diameter of the largest conductor	Nominal cross-sectional area	Diameter of the largest conductor
	mm^2	mm	mm^2	mm
25A 2P + ⏚ (portable accessory)	-	-	From 2,5 up to 4 inclusive	2,9
32 A (fixed accessory)	From 4,0 up to 10 inclusive	4,32	From 4,0 up to 10 inclusive	5,1
32 A (portable accessory)	-	-	From 2,5 up to 6 inclusive	3,87

[a] The terminal shall allow the connection of two 1,5 mm^2 conductors which have a diameter of 1,45 mm.

[b] Some countries require the looping-in of three conductors of 2,5 mm^2, or two conductors of 4 mm^2.

The conductor space shall be at least that specified in Figure 9, Figure 10, Figure 11 or Figure 12.

Documents
Document Sharing Hub
Full document details: IEC 60884-2-6 2025 EXV

Dimensions in millimetres

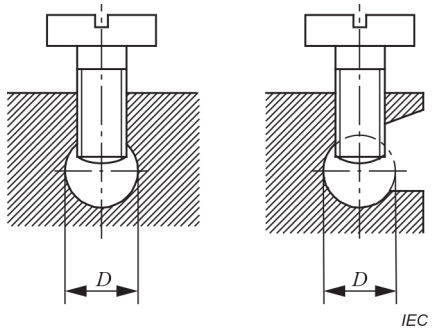

a) **Terminal without pressure plate**

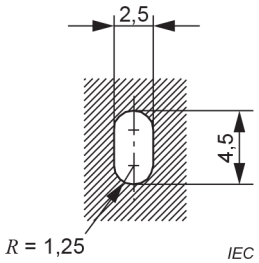

b) **Elongated hole terminal**

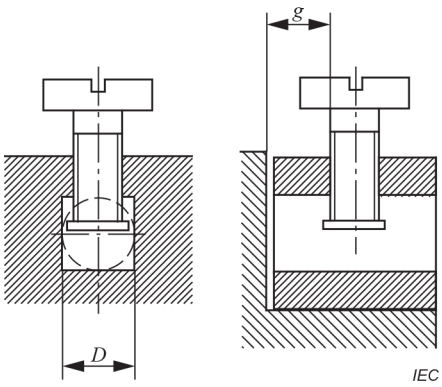

c) **Terminal with pressure plate**

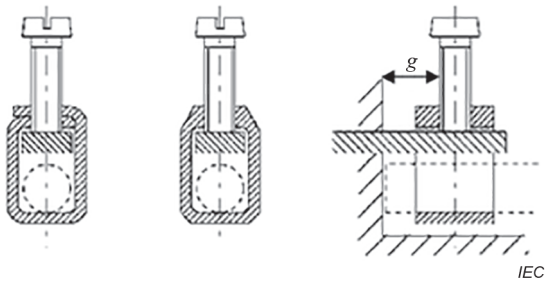

d) **Stirrup terminal**

Cross-section of conductor accepted by the terminal	**Minimum diameter *D* (or minimum dimensions) of conductor space**	**Minimum distance *g* between clamping screw and end of conductor when fully inserted**		**Torque**					
mm^2	mm	mm		Nm					
		One screw	Two screws	1 [a]		2 [a]		3 [a]	
				One screw	Two screws	One screw	Two screws	One screw	Two screws
Up to 1,5	2,5	1,5	1,5	0,2	0,2	0,4	0,4	0,4	0,4
2,5 (circular hole)	3,0	1,5	1,5	0,25	0,2	0,5	0,4	0,5	0,4
2,5 (elongated hole)	2,5 × 4,5	1,5	1,5	0,25	0,2	0,5	0,4	0,5	0,4
4	3,6	1,8	1,5	0,4	0,2	0,8	0,4	0,8	0,4
6	4,0	1,8	1,5	0,4	0,25	0,8	0,5	0,8	0,5
10	4,5	2,0	1,5	0,7	0,25	1,2	0,5	1,2	0,5
[a] The values specified apply to screws covered by the corresponding columns in Table 7.									

The part of the terminal containing the threaded hole and the part of the terminal against which the conductor is clamped by the screw may be two separate parts, as in the case of terminals provided with a stirrup.

The shape of the conductor space may differ from those shown, provided that a circle with a diameter equal to the minimum specified for *D* or the minimum outline specified for the elongated hole accepting cross-sections of conductors up to 2,5 mm^2 can be inscribed.

Figure 9 – Pillar terminals

Documents
Document Sharing Hub
Full document details: IEC 60884-2-6 2025 EXV

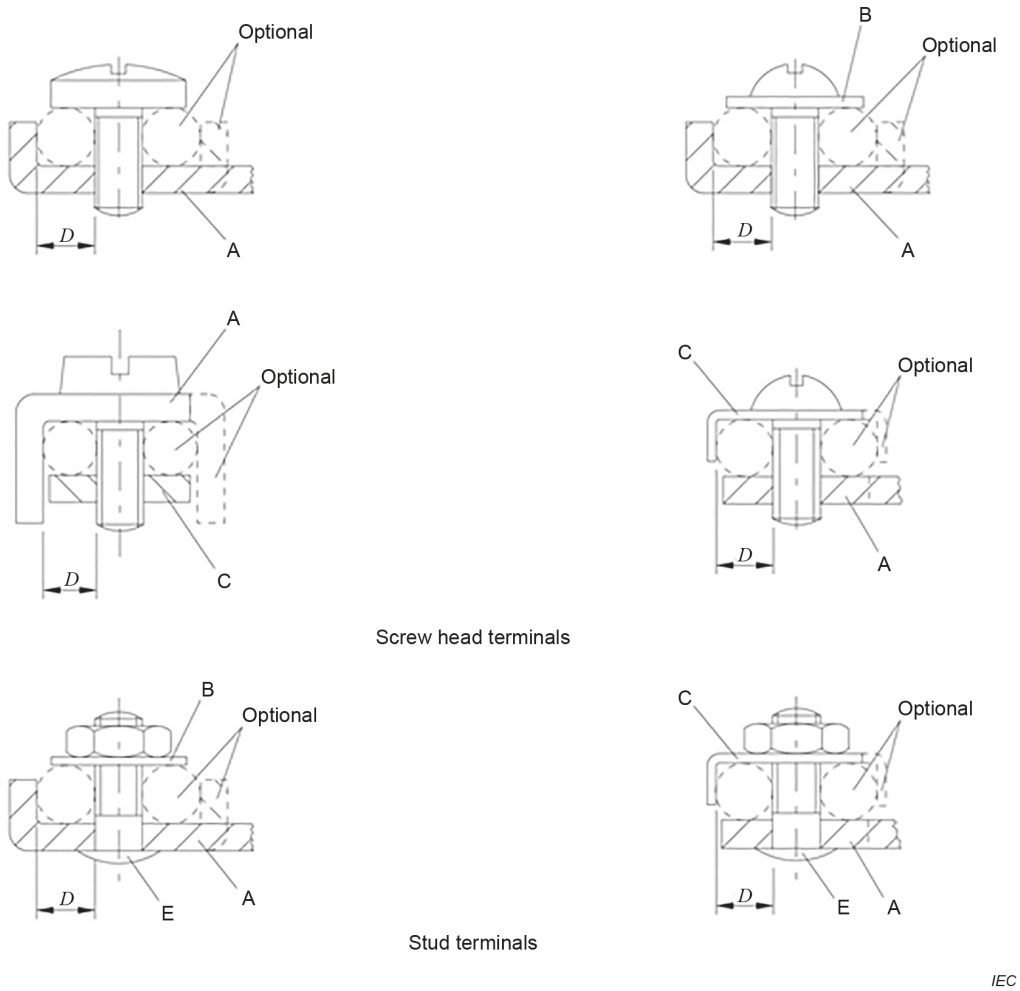

Key

A Fixed part
B Washer or clamping plate
C Anti-spread device
D Conductor space
E Stud

Cross-section of conductor accepted by the terminal	Minimum diameter *D* of conductor space	Torque	
mm^2	mm	Nm	
		3[a]	
		One screw or stud	Two screws or studs
Up to 1,5	1,7	0,5	–
Up to 2,5	2,0	0,8	–
Up to 4	2,7	1,2	0,5
Up to 6	3,6	2,0	1,2
Up to 10	4,3	2,0	1,2
[a] The values specified apply to the screws covered by the corresponding columns in Table 7.			

The part which retains the conductor in position may be of insulating material provided the pressure necessary to clamp the conductor is not transmitted through the insulating material.

The second optional space for the terminal accepting cross-section of conductors up to 2,5 mm^2 may be used for the connection of the second conductor when it is required to connect two 2,5 mm^2 conductors.

Figure 10 – Screw head terminals and stud terminals

Documents
Document Sharing Hub
Full document details: IEC 60884-2-6 2025 EXV

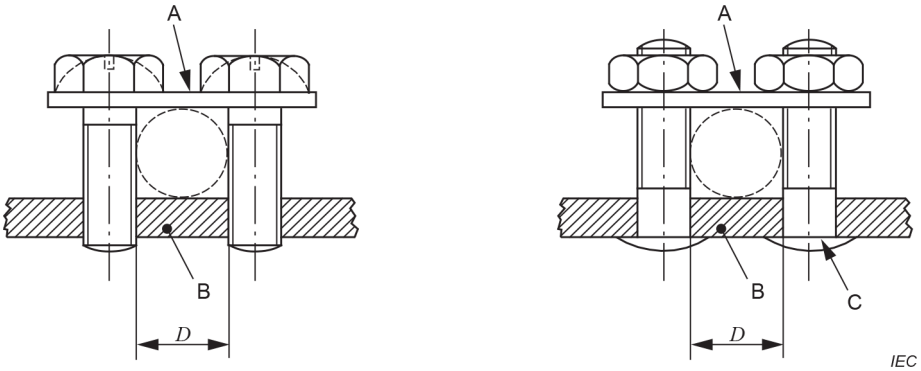

Key

A Saddle

B Fixed part

C Stud

D Conductor space

Cross-section of conductor accepted by the terminal mm^2	**Minimum diameter *D* of conductor space** mm	**Torque** Nm
Up to 4	3,0	0,5
Up to 6	4,0	0,8
Up to 10	4,5	1,2

The shape of the conductor space may differ from that shown in this Figure 11, provided that a circle with a diameter equal to the minimum value specified for *D* can be inscribed.

The shape of the upper and lower faces of the saddle may have a different shape to accommodate conductors of either small or large cross-sectional areas by inverting the saddle.

Figure 11 – Saddle terminals

Documents
Document Sharing Hub
Full document details: IEC 60884-2-6 2025 EXV

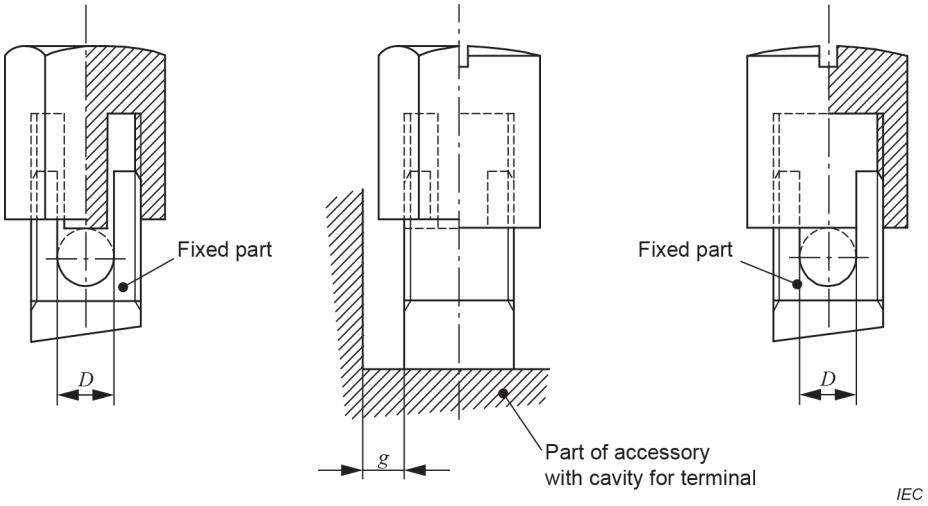

Cross-section of conductor accepted by the terminal mm^2	Minimum diameter *D* of conductor space [a] mm	Minimum distance *g* between fixed part and end of conductor when fully inserted mm
Up to 1,5	1,7	1,5
Up to 2,5	2,0	1,5
Up to 4	2,7	1,8
Up to 6	3,6	1,8
Up to 10	4,3	2,0
[a] The bottom of the conductor space shall be slightly rounded in order to obtain a reliable connection.		

The value of the torque to be applied is that specified in column 2 or 3 of Table 7 as appropriate.

Figure 12 – Mantle terminals

Compliance is checked by inspection, by measurement and by fitting conductors of the smallest and largest nominal cross-sectional areas specified.

12.2.2 Terminals with screw clamping shall allow the conductor to be connected without special preparation.

Compliance is checked by inspection.

NOTE The term "special preparation" covers soldering of the wires of the conductor, use of cable lugs, formation of eyelets, etc., but not the reshaping of the conductor before its introduction into the terminal or the twisting of a flexible conductor to consolidate the end.

12.2.3 Terminals with screw clamping shall have adequate mechanical strength.

Screws and nuts for clamping the conductors shall have a metric ISO thread or a thread comparable in pitch and mechanical strength.

Screws shall not be of metal which is soft or liable to creep, such as zinc or aluminium.

Compliance is checked by inspection and by the tests of 12.2.6 and 12.2.8.

NOTE SI, BA, and UN threads are considered to be comparable in pitch and mechanical strength to metric ISO thread.

AVA Documents
Document Sharing Hub

12.2.4 Terminals with screw clamping shall be resistant to corrosion.

Terminals, the body of which is made of copper or copper alloy as specified in 26.5, are considered as complying with this requirement.

12.2.5 Terminals with screw clamping shall be so designed and constructed that they clamp the conductor(s) without undue damage to the conductor(s).

Compliance is checked by the following test.

The terminal is placed in the test apparatus according to Figure 13 and fitted with rigid solid, rigid stranded and/or flexible conductor(s), according to Table 4 first with the smallest and then with the largest nominal cross-sectional area, the clamping screw(s) or nut(s) being tightened with the torque according to Table 7.

Dimensions in millimetres

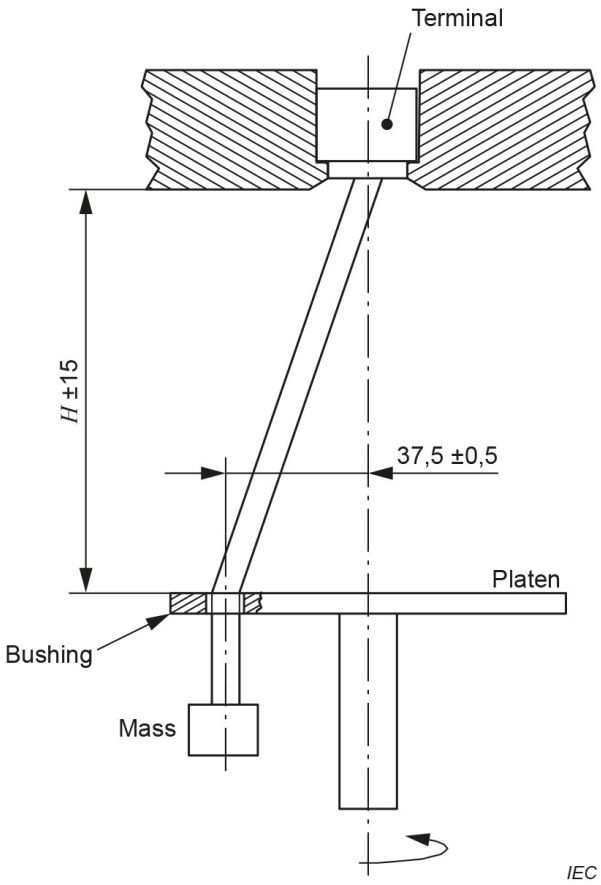

Care should be taken that the bushing hole is made in a way which ensures that the force extended to the cable is pure pulling force and that the transmission of any torque to the connection in the clamping means is avoided.

Figure 13 – Arrangement for checking damage to conductors

Terminals suitable for rigid and flexible conductors according to Table 4 are checked with rigid solid or rigid stranded conductors and on a new set of specimens with flexible conductors.

Terminals suitable for flexible conductors only (rewirable portable accessories) are checked with flexible conductors

The length of the test conductor shall be 75 mm longer than the height (H) specified in Table 10.

AVA Documents
Document Sharing Hub
Full document details: IEC 60884-2-6 2025 EXV

The end of the conductor is passed through an appropriate bushing in a plate positioned at a height (H) below the equipment, as given in Table 10. The bushing is positioned in a horizontal plane such that its centre line describes a circle of 75 mm diameter, concentric with the centre of the clamping unit in the horizontal plane; the platen is then rotated at a rate of (10 ± 2) revolutions per minute.

The distance between the mouth of the clamping unit and the upper surface of the bushing shall be within ±15 mm of the height specified in Table 10. The bushing may be lubricated to prevent binding, twisting, or rotation of the insulated conductor.

A mass as specified in Table 10 is suspended from the end of the conductor. The duration of the test is approximately 15 min.

During the test, the conductor shall neither slip out of the clamping unit nor break near the clamping unit, nor shall the conductor be damaged in such a way as to render it unfit for further use.

In the case of the flexible conductor, the breakage of a few wires shall not be taken into account provided it does not exceed 15 % of the original number of wires.

12.2.6 Terminals with screw clamping shall be so designed that they clamp the conductor reliably between metal surfaces.

Compliance is checked by inspection and by the following test.

Terminals suitable for rigid and flexible conductors according to Table 4 are checked with rigid solid or rigid stranded conductors and on a new set of specimens with flexible conductors.

Terminals suitable for flexible conductors only (rewirable portable accessories) are checked with flexible conductors.

The terminals are fitted first with conductors of the smallest and then with conductors of the largest cross-sectional area specified in Table 4, the terminal screws being tightened with a torque equal to two-thirds of the torque shown in the appropriate column of Table 7.

If the screw has a hexagonal head with a slot, the torque applied is equal to two-thirds of the torque shown in column 3 of Table 7.

Each conductor is then subjected to a pull as specified in Table 5, applied without jerks, for 1 min, in the direction of the axis of the conductor space.

Table 5 – Values for pull test for screw-type terminals

Nominal cross-sectional area of conductors accepted by the terminal mm^2	**Pull** N
Above 0,75 up to 1,5 inclusive	40
Above 1,5 up to 4 inclusive	50
Above 4 up to 6 inclusive	60
Above 6 up to 10 inclusive	80

If the clamp is provided for two or three conductors, the appropriate pull is applied consecutively to each conductor.

Documents
Document Sharing Hub
Full document details: IEC 60884-2-6 2025 EXV

During the test, the conductor shall not move noticeably in the terminal.

12.2.7 Terminals with screw clamping shall be so designed or placed that neither a rigid solid conductor nor a wire of a stranded conductor can slip out while the clamping screws or nuts are tightened.

Compliance is checked by the following test.

The terminals are fitted with conductors having the largest nominal cross-sectional area specified in Table 4.

Terminals suitable for rigid and flexible conductors according to Table 4 are checked with rigid solid or rigid stranded conductors and on a new set of specimens with flexible conductors.

Terminals suitable for flexible conductors only (rewirable portable accessories) are checked with flexible conductors.

Terminals intended for the looping-in of two or three conductors are checked, being fitted with the permissible number of conductors.

The terminals are fitted with conductors having the composition shown in Table 6.

Table 6 – Composition of conductors

Nominal cross-sectional area mm^2	**Number of wires (*n*) and nominal diameter of conductors** ***n*** × mm		
	Flexible conductor	**Rigid solid conductor**	**Rigid stranded conductor**
0,75	24 × 0,20	–	–
1,0	32 × 0,20	1 × 1,13	7 × 0,42
1,5	30 × 0,25	1 × 1,38	7 × 0,52
2,5	50 × 0,25	1 × 1,78	7 × 0,67
4,0	56 × 0,30	1 × 2,25	7 × 0,86
6,0	84 × 0,30	1 × 2,76	7 × 1,05
10,0	–	1 × 3,57	7 × 1,35

Before insertion into the clamping means of the terminal, wires of rigid (solid or stranded) conductors are straightened; rigid stranded conductors may, in addition, be twisted to restore them approximately to their original shape and flexible conductors are twisted in one direction so that there is a uniform twist of one complete turn in a length of approximately 20 mm.

The conductor is inserted into the clamping means of the terminal for the minimum distance specified, or where no distance is specified, until the conductor just projects from the far side of the terminal and in the position most likely to allow the wire to escape.

The clamping screw is then tightened with a torque equal to two-thirds of the torque shown in the appropriate column of Table 7.

For flexible conductors the test is repeated with a new conductor which is twisted as before, but in the opposite direction.

After the test, no wire of the conductors shall have escaped from the clamping unit thus reducing creepage distances and clearances to values lower than those indicated in Table 20.

AVA Documents
Document Sharing Hub
Full document details: IEC 60884-2-6 2025 EXV

12.2.8 Terminals with screw clamping shall be so fixed or located within the accessory that, when the clamping screws or nuts are tightened or loosened, the terminals shall not work loose from their fixing to accessories.

NOTE These requirements do not imply that the terminals are designed so that their rotation or displacement is prevented, but any movement is sufficiently limited so as to prevent non-compliance with this document.

The use of sealing compound or resin is considered to be sufficient for preventing a terminal from working loose, provided that:

– the sealing compound or resin is not subject to stress during normal use, and
– the effectiveness of the sealing compound or resin is not impaired by temperatures attained by the terminal under the most unfavourable conditions specified in this document.

Compliance is checked by inspection and by the following test.

A rigid solid copper conductor or a rigid stranded conductor of the largest nominal cross-sectional area specified in Table 4 is placed in the terminal.

Where rigid solid conductors do not exist, the test may be done with rigid stranded conductors.

Before insertion into the clamping means of the terminal, wires of rigid (solid or stranded) are straightened; rigid stranded conductors may, in addition, be twisted to restore them approximately to their original shape.

The conductor is inserted into the clamping means of the terminal for the minimum distance specified, or where no distance is specified, until the conductor just projects from the far side of the terminal and in the position most likely to allow the wire to escape.

Screws and nuts are tightened and loosened five times by means of a suitable test screwdriver or spanner, the torque applied when tightening being equal to the torque shown in the appropriate column of Table 7 or in the table of the appropriate Figure 9, Figure 10 or Figure 11, whichever is the greater.

The conductor is moved each time the screw or nut is loosened.

Where a screw has a hexagonal head with a slot, only the test with the screwdriver is performed with the torque values given in column 3 of Table 7.

Documents
Document Sharing Hub
Full document details: IEC 60884-2-6 2025 EXV