IEC 60885-3

Edition 2.0 2015-04

INTERNATIONAL STANDARD

NORME INTERNATIONALE

Electrical test methods for electric cables – Part 3: Test methods for partial discharge measurements on lengths of extruded power cables

Méthodes d'essais électriques pour les câbles électriques – Partie 3: Méthodes d'essais pour la mesure des décharges partielles sur des longueurs de câbles de puissance extrudés

IEC 60885-3:2015-04(en-fr)

Documents
Document Sharing Hub
Full document details: IEC 60885-3 2015

THIS PUBLICATION IS COPYRIGHT PROTECTED

Copyright © 2015 IEC, Geneva, Switzerland

All rights reserved. Unless otherwise specified, no part of this publication may be reproduced or utilized in any form or by any means, electronic or mechanical, including photocopying and microfilm, without permission in writing from either IEC or IEC's member National Committee in the country of the requester. If you have any questions about IEC copyright or have an enquiry about obtaining additional rights to this publication, please contact the address below or your local IEC member National Committee for further information.

Droits de reproduction réservés. Sauf indication contraire, aucune partie de cette publication ne peut être reproduite ni utilisée sous quelque forme que ce soit et par aucun procédé, électronique ou mécanique, y compris la photocopie et les microfilms, sans l'accord écrit de l'IEC ou du Comité national de l'IEC du pays du demandeur. Si vous avez des questions sur le copyright de l'IEC ou si vous désirez obtenir des droits supplémentaires sur cette publication, utilisez les coordonnées ci-après ou contactez le Comité national de l'IEC de votre pays de résidence.

IEC Central Office
3, rue de Varembé
CH-1211 Geneva 20
Switzerland

Tel.: +41 22 919 02 11
Fax: +41 22 919 03 00
info@iec.ch
www.iec.ch

About the IEC
The International Electrotechnical Commission (IEC) is the leading global organization that prepares and publishes International Standards for all electrical, electronic and related technologies.

About IEC publications
The technical content of IEC publications is kept under constant review by the IEC. Please make sure that you have the latest edition, a corrigenda or an amendment might have been published.

IEC Catalogue - webstore.iec.ch/catalogue
The stand-alone application for consulting the entire bibliographical information on IEC International Standards, Technical Specifications, Technical Reports and other documents. Available for PC, Mac OS, Android Tablets and iPad.

IEC publications search - www.iec.ch/searchpub
The advanced search enables to find IEC publications by a variety of criteria (reference number, text, technical committee,…). It also gives information on projects, replaced and withdrawn publications.

IEC Just Published - webstore.iec.ch/justpublished
Stay up to date on all new IEC publications. Just Published details all new publications released. Available online and also once a month by email.

Electropedia - www.electropedia.org
The world's leading online dictionary of electronic and electrical terms containing more than 30 000 terms and definitions in English and French, with equivalent terms in 15 additional languages. Also known as the International Electrotechnical Vocabulary (IEV) online.

IEC Glossary - std.iec.ch/glossary
More than 60 000 electrotechnical terminology entries in English and French extracted from the Terms and Definitions clause of IEC publications issued since 2002. Some entries have been collected from earlier publications of IEC TC 37, 77, 86 and CISPR.

IEC Customer Service Centre - webstore.iec.ch/csc
If you wish to give us your feedback on this publication or need further assistance, please contact the Customer Service Centre: csc@iec.ch.

A propos de l'IEC
La Commission Electrotechnique Internationale (IEC) est la première organisation mondiale qui élabore et publie des Normes internationales pour tout ce qui a trait à l'électricité, à l'électronique et aux technologies apparentées.

A propos des publications IEC
Le contenu technique des publications IEC est constamment revu. Veuillez vous assurer que vous possédez l'édition la plus récente, un corrigendum ou amendement peut avoir été publié.

Catalogue IEC - webstore.iec.ch/catalogue
Application autonome pour consulter tous les renseignements bibliographiques sur les Normes internationales, Spécifications techniques, Rapports techniques et autres documents de l'IEC. Disponible pour PC, Mac OS, tablettes Android et iPad.

Recherche de publications IEC - www.iec.ch/searchpub

La recherche avancée permet de trouver des publications IEC en utilisant différents critères (numéro de référence, texte, comité d'études,…). Elle donne aussi des informations sur les projets et les publications remplacées ou retirées.

IEC Just Published - webstore.iec.ch/justpublished

Restez informé sur les nouvelles publications IEC. Just Published détaille les nouvelles publications parues. Disponible en ligne et aussi une fois par mois par email.

Electropedia - www.electropedia.org

Le premier dictionnaire en ligne de termes électroniques et électriques. Il contient plus de 30 000 termes et définitions en anglais et en français, ainsi que les termes équivalents dans 15 langues additionnelles. Egalement appelé Vocabulaire Electrotechnique International (IEV) en ligne.

Glossaire IEC - std.iec.ch/glossary
Plus de 60 000 entrées terminologiques électrotechniques, en anglais et en français, extraites des articles Termes et Définitions des publications IEC parues depuis 2002. Plus certaines entrées antérieures extraites des publications des CE 37, 77, 86 et CISPR de l'IEC.

Service Clients - webstore.iec.ch/csc

Si vous désirez nous donner des commentaires sur cette publication ou si vous avez des questions contactez-nous: csc@iec.ch.

Documents
Document Sharing Hub

Full document details: IEC 60885-3 2015

IEC 60885-3

Edition 2.0 2015-04

INTERNATIONAL STANDARD

NORME INTERNATIONALE

Electrical test methods for electric cables – Part 3: Test methods for partial discharge measurements on lengths of extruded power cables

Méthodes d'essais électriques pour les câbles électriques – Partie 3: Méthodes d'essais pour la mesure des décharges partielles sur des longueurs de câbles de puissance extrudés

INTERNATIONAL
ELECTROTECHNICAL
COMMISSION

COMMISSION
ELECTROTECHNIQUE
INTERNATIONALE

ICS 29.060.20

ISBN 978-2-8322-2582-0

Warning! Make sure that you obtained this publication from an authorized distributor.
Attention! Veuillez vous assurer que vous avez obtenu cette publication via un distributeur agréé.

® Registered trademark of the International Electrotechnical Commission
Marque déposée de la Commission Electrotechnique Internationale

AVA Documents
Document Sharing Hub

Full document details: IEC 60885-3 2015

CONTENTS

FOREWORD 4
1 Scope 6
2 Normative references 6
3 Terms, definitions and symbols 6
3.1 Terms and definitions 6
3.2 Symbols used in Figures 1 to 14 6
4 Overview 7
4.1 General 7
4.2 Object 7
4.3 Problem of superposition of travelling waves for long lengths 7
5 Partial discharge tests 10
5.1 Test apparatus 10
5.1.1 Equipment 10
5.1.2 Test circuit and instruments 10
5.1.3 Double pulse generator 10
5.1.4 Terminal impedance 10
5.1.5 Reflection suppressor 10
5.2 Setting up the test circuit 10
5.2.1 Determination of characteristic properties of the test circuit 10
5.2.2 Terminal impedance 10
5.2.3 Determination of superposition of travelling waves 11
5.2.4 Reflection suppressor 11
5.2.5 Calibration of the measuring system in the complete test circuit 11
5.2.6 Sensitivity 11
5.3 Measurement procedures 11
5.3.1 General 11
5.3.2 Short cable lengths including type test lengths 12
5.3.3 Long cable lengths tested without a terminal impedance 12
5.3.4 Long cable lengths tested with a terminal impedance 13
5.3.5 Long cable lengths tested with a reflection suppressor 14
5.4 Voltage levels/partial discharge limits 15
5.5 Double pulse behaviour and plotting the double pulse diagram 15
5.6 Requirements for the terminal impedance 16
5.6.1 General 16
5.6.2 RC element 16
5.6.3 RLC element series resonance circuit 17
Bibliography 21

Figure 1 – Discharge site exactly at the cable end remote from the detector ($x = l$) 7
Figure 2 – Discharge site at a distance $x = x_1$ – Travelling waves 8
Figure 3 – Attenuation of PD pulses along the cable 8
Figure 4 – Superposition and attenuation of PD pulses 9
Figure 5 – Input unit Z_A connected in series with the coupling capacitor, C_K 17
Figure 6 – Input unit Z_A connected in series with the cable, C_X 18
Figure 7 – Bridge circuit 18

AVA Documents
Document Sharing Hub

Full document details: IEC 60885-3 2015

Figure 8 – Connection of the terminal impedance Z_W 18
Figure 9 – Connection of the reflection suppressor, RS 19
Figure 10 – Connection of the double pulse generator into the measuring circuit in Figure 5 19
Figure 11 – Double pulse diagram type 1 without negative superposition 19
Figure 12 – Double pulse diagram type 2 with negative superposition between t_1 and t_2 20
Figure 13 – Double pulse diagram type 3 with negative and positive superpositions between t_1 and t_2 20
Figure 14 – Connection of the double pulse generator for the test circuit in Figure 9 with the reflection suppressor 20

Documents
Document Sharing Hub
Full document details: IEC 60885-3 2015

INTERNATIONAL ELECTROTECHNICAL COMMISSION

ELECTRICAL TEST METHODS FOR ELECTRIC CABLES –

Part 3: Test methods for partial discharge measurements on lengths of extruded power cables

FOREWORD

1) The International Electrotechnical Commission (IEC) is a worldwide organization for standardization comprising all national electrotechnical committees (IEC National Committees). The object of IEC is to promote international co-operation on all questions concerning standardization in the electrical and electronic fields. To this end and in addition to other activities, IEC publishes International Standards, Technical Specifications, Technical Reports, Publicly Available Specifications (PAS) and Guides (hereafter referred to as "IEC Publication(s)"). Their preparation is entrusted to technical committees; any IEC National Committee interested in the subject dealt with may participate in this preparatory work. International, governmental and non-governmental organizations liaising with the IEC also participate in this preparation. IEC collaborates closely with the International Organization for Standardization (ISO) in accordance with conditions determined by agreement between the two organizations.
2) The formal decisions or agreements of IEC on technical matters express, as nearly as possible, an international consensus of opinion on the relevant subjects since each technical committee has representation from all interested IEC National Committees.
3) IEC Publications have the form of recommendations for international use and are accepted by IEC National Committees in that sense. While all reasonable efforts are made to ensure that the technical content of IEC Publications is accurate, IEC cannot be held responsible for the way in which they are used or for any misinterpretation by any end user.
4) In order to promote international uniformity, IEC National Committees undertake to apply IEC Publications transparently to the maximum extent possible in their national and regional publications. Any divergence between any IEC Publication and the corresponding national or regional publication shall be clearly indicated in the latter.
5) IEC itself does not provide any attestation of conformity. Independent certification bodies provide conformity assessment services and, in some areas, access to IEC marks of conformity. IEC is not responsible for any services carried out by independent certification bodies.
6) All users should ensure that they have the latest edition of this publication.
7) No liability shall attach to IEC or its directors, employees, servants or agents including individual experts and members of its technical committees and IEC National Committees for any personal injury, property damage or other damage of any nature whatsoever, whether direct or indirect, or for costs (including legal fees) and expenses arising out of the publication, use of, or reliance upon, this IEC Publication or any other IEC Publications.
8) Attention is drawn to the Normative references cited in this publication. Use of the referenced publications is indispensable for the correct application of this publication.
9) Attention is drawn to the possibility that some of the elements of this IEC Publication may be the subject of patent rights. IEC shall not be held responsible for identifying any or all such patent rights.

International Standard IEC 60885-3 has been prepared by IEC technical committee 20: Electric cables.

This second edition of IEC 60885-3 cancels and replaces the first edition, published in 1988 and constitutes a technical revision.

This edition includes the following significant technical changes with respect to the previous edition:

- The definition of sensitivity as twice the background noise level has been removed and replaced by a practical assessment of sensitivity based on the minimum level of detectable discharge.
- References to measurements of pulse heights in mm on an oscilloscope have been replaced by measurements of partial discharge magnitude in pC.

Documents
Document Sharing Hub

Full document details: IEC 60885-3 2015

- The order of the clauses has been revised in line with the general numbering scheme of IEC standards and to provide clarity in order to facilitate its practical use. Section 3 of the first edition (Application guide) has been removed as it is considered that background information is better obtained from the original references as listed in the bibliography.

The text of this standard is based on the following documents:

FDIS	Report on voting
20/1560/FDIS	20/1587/RVD

Full information on the voting for the approval of this standard can be found in the report on voting indicated in the above table.

This publication has been drafted in accordance with the ISO/IEC Directives, Part 2.

A list of all parts in the IEC 60885 series, published under the general title *Electrical test methods for electric cables*, can be found on the IEC website.

The committee has decided that the contents of this publication will remain unchanged until the stability date indicated on the IEC website under "http://webstore.iec.ch" in the data related to the specific publication. At this date, the publication will be

- reconfirmed,
- withdrawn,
- replaced by a revised edition, or
- amended.

Documents
Document Sharing Hub

Full document details: IEC 60885-3 2015

ELECTRICAL TEST METHODS FOR ELECTRIC CABLES –

Part 3: Test methods for partial discharge measurements on lengths of extruded power cables

1 Scope

This part of IEC 60885 specifies the test methods for partial discharge (PD) measurements on lengths of extruded power cable, but does not include measurements made on installed cable systems.

Reference is made to IEC 60270 which gives the techniques and considerations applicable to partial discharge measurements in general.

2 Normative references

The following documents, in whole or in part, are normatively referenced in this document and are indispensable for its application. For dated references, only the edition cited applies. For undated references, the latest edition of the referenced document (including any amendments) applies.

IEC 60270:2000, *High-voltage test techniques – Partial discharge measurements*

3 Terms, definitions and symbols

3.1 Terms and definitions

For the purposes of this document, the terms and definitions given in IEC 60270 apply.

3.2 Symbols used in Figures 1 to 14

a_1 discharge magnitude measured with the calibrator at the end near to the detector

a_2 discharge magnitude measured with the calibrator at the end remote from the detector

C_{cal} calibrator

C_K coupling capacitor

C_x power cable

D detector

I double pulse generator

l length of the power cable

M coaxial signal cable

Q discharge magnitude

$R_1 R_2$ matching resistors

RS reflection suppressor

v propagation velocity of partial discharge

V voltage indicator

W power supply

Documents
Document Sharing Hub

Full document details: IEC 60885-3 2015

Z impedance/filter

Z_A input unit

Z_W terminal impedance

4 Overview

4.1 General

Partial discharge measurements shall be carried out using the test techniques specified in IEC 60270.

4.2 Object

The object of the test is to determine the discharge magnitude, or to check that the discharge magnitude does not exceed a specified value, at a specified voltage and a declared minimum sensitivity.

4.3 Problem of superposition of travelling waves for long lengths

Short lengths of cable behave in the same way as a single capacitor in that the discharge magnitude can be measured directly by considering the cable as a single capacitor. However longer cables behave like a transmission line and PD pulses travel away from their source in both directions along the cable, in the form of a wave. On reaching the remote end from the measuring equipment, the pulse will be reflected with the same polarity if the end is open circuit. The reflected pulse will then travel back along the length of cable and arrive at the detector at a time after the directly received pulse. If the time between the arrival of the two pulses is short (the time difference depending on the length of the cable) then the detection instrument may give a false response, indicating either a larger or smaller magnitude of discharge than was actually the case. The methods detailed in this standard allow correct measurement of partial discharges under these conditions.

Figures 1 to 4 illustrate the behaviour of travelling waves and possible superposition effects.

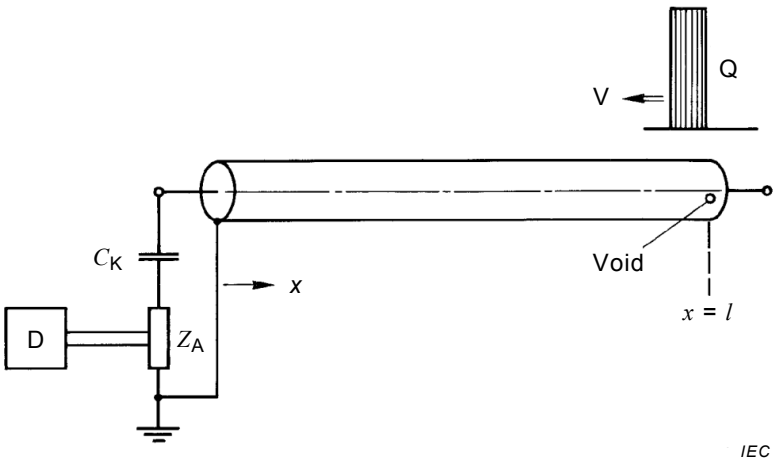

Figure 1 – Discharge site exactly at the cable end remote from the detector ($x = l$)

Documents
Document Sharing Hub
Full document details: IEC 60885-3 2015

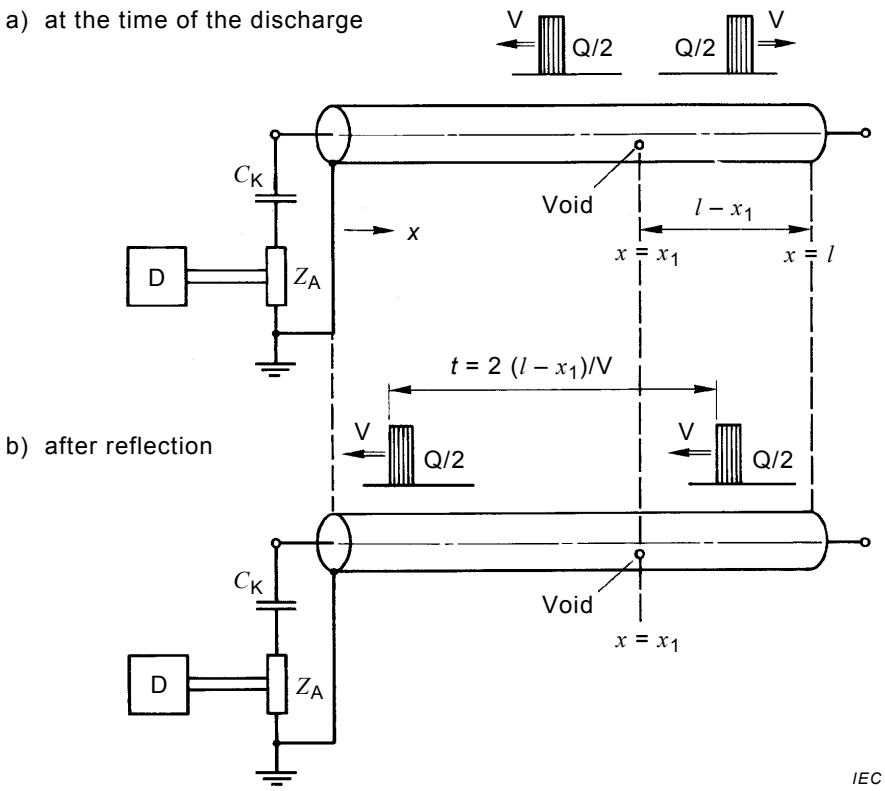

Figure 2 – Discharge site at a distance $x = x_1$ – Travelling waves

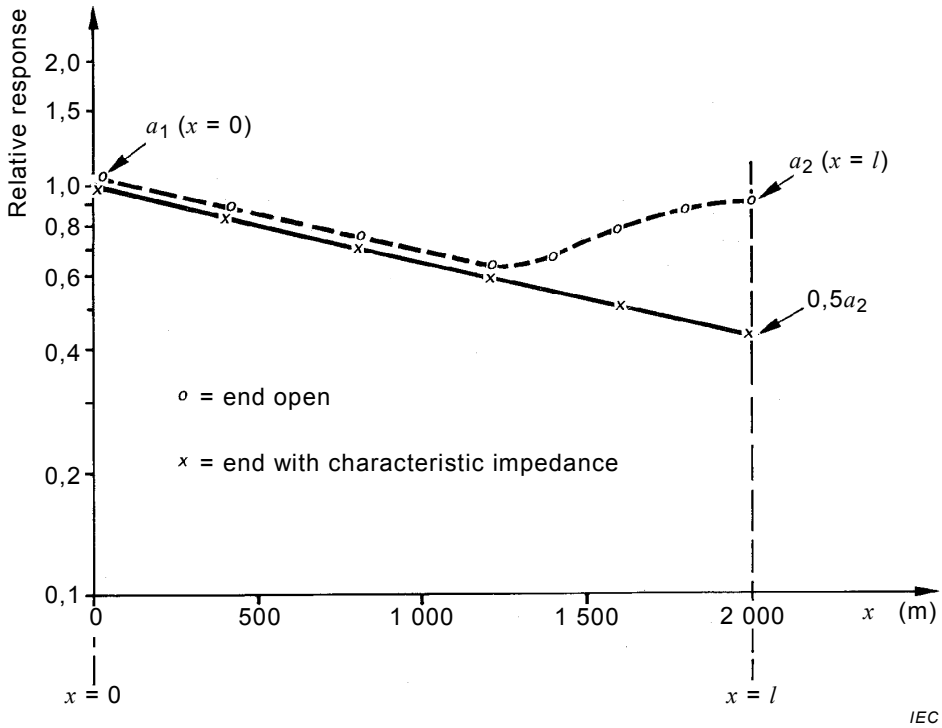

Figure 3 – Attenuation of PD pulses along the cable

Documents
Document Sharing Hub
Full document details: IEC 60885-3 2015

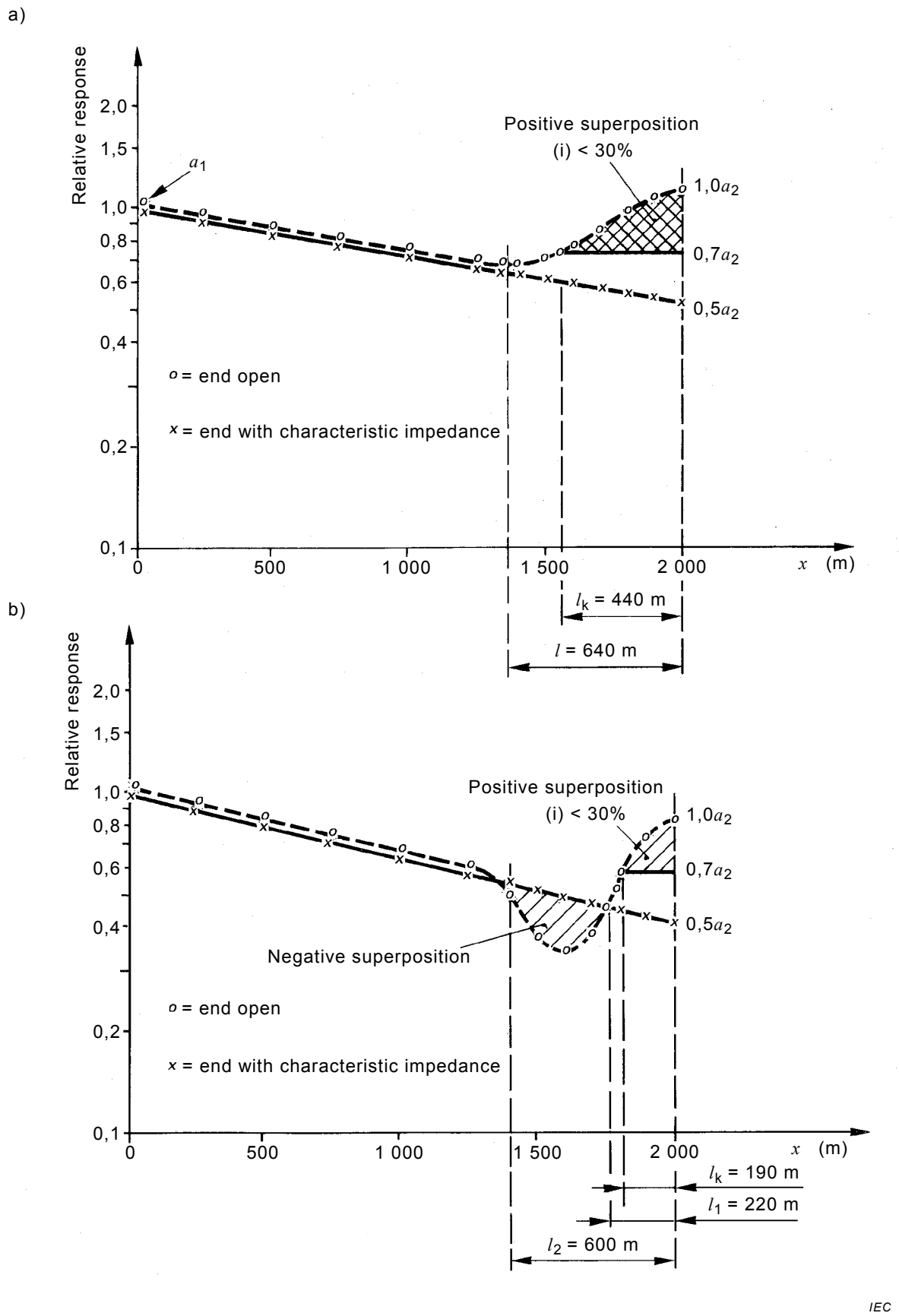

Figure 4 – Superposition and attenuation of PD pulses

Documents
Document Sharing Hub
Full document details: IEC 60885-3 2015

5 Partial discharge tests

5.1 Test apparatus

5.1.1 Equipment

The equipment consists of a high-voltage alternating voltage supply having a rating adequate to energise the length of cable under test, a voltmeter for high voltages, a measuring circuit, a discharge calibrator, a double pulse generator and, where applicable, a terminal impedance or reflection suppressor. All components of the test equipment shall have a sufficiently low noise level to achieve the required sensitivity. The frequency of the test supply shall be in the range 45 Hz to 65 Hz with a waveshape approximating to a sinusoid with the ratio of peak to r.m.s. values being equal to $\sqrt{2}$ with a maximum tolerance of 5 %.

5.1.2 Test circuit and instruments

The test circuit includes the high voltage power supply, test object, the coupling capacitor and the HV and PD measuring equipment. The measuring circuit consists of the measuring impedance (input impedance of the measuring instrument and the input unit which is selected to match the cable impedance), the connecting lead and the measuring instrument. The measuring instrument or detector includes a suitable amplifying device, an oscilloscope, or other instrument to indicate the existence of partial discharges and to measure the apparent charge. The measuring system shall comply with IEC 60270.

5.1.3 Double pulse generator

A double pulse generator is an instrument producing two equal pulses (with the same apparent charge) following each other within a time interval which can be varied between 0,2 μs to 100 μs. The rise time of the pulses shall not exceed 20 ns (10 % to 90 % of peak value); the time between 10 % values of the front and the tail shall not exceed 150 ns. The pulses may be synchronized with the power frequency.

5.1.4 Terminal impedance

A terminal impedance is an impedance, equal in value to the characteristic impedance of the test object, which is connected to the open end of the cable remote from the detector. It may be a combination of resistance and capacitance (R & C) or resistance, capacitance and inductance (R, C & L). The components shall be suitable for operation at the test voltage to be applied to the cable under test. Additional requirements are specified in section 5.6.

5.1.5 Reflection suppressor

This is an electronic switch which is designed to block the input of the measuring instrument from pulses reflected from the open end of the cable. This is achieved by blocking the input for a fixed time after the first pulse is received.

5.2 Setting up the test circuit

5.2.1 Determination of characteristic properties of the test circuit

The characteristic properties of the test circuit should be determined under the conditions to be used. The test circuits normally used for connections to a single cable end are those shown in Figures 5, 6, 7, 8 and 9. Similar test circuits are also applicable when both ends of the cable conductor are connected together; in this case the two ends of the metal cable screen shall also be connected together.

5.2.2 Terminal impedance

If a terminal impedance is connected to the remote end of the cable under test, with an impedance value equal to the characteristic impedance of the cable then the cable will behave

AVA Documents
Document Sharing Hub
Full document details: IEC 60885-3 2015

as if it is of infinite length and there will be no reflected wave. The circuit for connection of a terminal impedance is shown in Figure 8. The values (RC and L where applicable) of the components of the terminal impedance and its suitability for the type of cable under test should be demonstrated using the procedure described in 5.6. This check should be carried out when the test circuit is set up and also when any changes are made to the circuit.

5.2.3 Determination of superposition of travelling waves

If a terminal impedance is not used, it is necessary to determine the properties of the test circuit with respect to superposition of travelling waves. A double pulse generator is connected according to Figure 10 and a double pulse diagram is plotted (see 5.5 and Figures 11, 12 and 13). This check should be carried out when the test circuit is set up and also when any changes are made to the circuit.

5.2.4 Reflection suppressor

The purpose of using a reflection suppressor is to obtain a double pulse diagram of Type 1 corresponding to Figure 11. Using the arrangement shown in Figure 14, the efficiency of the reflection suppressor should be checked by plotting a double pulse diagram (see 5.5 and Figures 11, 12 and 13), when the test circuit is set up and also when any changes are made to the circuit.

5.2.5 Calibration of the measuring system in the complete test circuit

Calibration of the measuring system in the complete test circuit shall be carried out in accordance with Clause 5 of IEC 60270:2000. The calibrator used shall comply with IEC 60270. For long lengths of cable (> 100 m) there is an additional requirement that the calibrating capacitance shall be not greater than 150 pF.

5.2.6 Sensitivity

The sensitivity of the measuring system is defined as the minimum detectable discharge pulse, q_{min} (in picocoulombs – pC) that can be observed in the presence of background noise.

Value of q_{min} shall be determined by evaluation of the background noise level and shall be no more than twice the apparent noise level, h_{n} (h_{n} is the noise reading on the measuring instrument).

Therefore:

$$q_{\text{min}} = x \times k \times h_{\text{n}}$$

where k is the scale factor and x is the ratio of the minimum detectable discharge to the background noise. The maximum allowed value of x is 2. Typically values of x of between 1,25 and 1,5 should be achievable.

The maximum values of sensitivity shall be determined according to 5.4.

5.3 Measurement procedures

5.3.1 General

The selection of the test circuit depends on whether the cable sample may be considered as a short length (see 5.3.2) or a long length (see 5.3.3, 5.3.4 and 5.3.5). The test circuit shall be discharge free in order to achieve the required sensitivity (see 5.2.6). Calibration does not necessarily have to be done with the HV supply on (see 5.2.5). During the partial discharge measurement, individual pulses clearly identifiable as interference may be disregarded.

Documents
Document Sharing Hub
Full document details: IEC 60885-3 2015

5.3.2 Short cable lengths including type test lengths

5.3.2.1 Requirements

For short lengths the cable may be considered similar to a lumped capacitance. The limitation on length where this is not acceptable depends upon the test circuit used, however it may be assumed that cable lengths of up to 50 m (or 100 m, if both ends of the cable are connected together) behave as a lumped capacitance and therefore superposition of reflected waves need not be taken into account. For longer lengths whether they can be treated as a lumped capacitance shall be determined using the double pulse diagram as described in 5.5. The maximum length which can be considered as a lumped capacitance is defined as l_k; This may be as low as 100 m or even greater than 1 000 m, depending on the particular measuring system in use.

The test circuits normally used are those in Figures 5, 6 and 7.

5.3.2.2 Verification of sensitivity

The determination of the scale factor k for the measurement of the apparent charge shall be carried out in accordance with Clause 5 of IEC 60270:2000. Therefore the partial discharge calibrator shall be connected in parallel with the cable at the end remote from the detector.

5.3.2.3 Test procedure

The measurement shall be made only at one end of the cable.

The test parameters shall be selected according to 5.4.

5.3.3 Long cable lengths tested without a terminal impedance

5.3.3.1 General

For long cable lengths (>50 m or >100 m with ends connected), tested without a terminal impedance, it is necessary to plot a double pulse diagram.

5.3.3.2 Requirements

For cable lengths in excess of l_k it may still be possible to test without a terminal impedance provided superposition and attenuation phenomena are taken into account.

A double pulse generator is connected according to Figure 10 and a double pulse diagram is plotted (see 5.5 and Figures 11, 12 and 13). This shall be carried out when the test circuit is set up and also when any changes are made to the circuit.

A test without terminal impedance is permitted where the double pulse diagram is either

– type 1 (Figure 11), or
– type 2 and type 3 (Figures 12 and 13) but where the cable length, l, lies outside the limits $2l_1 \leq l \leq 2l_2$.

(See 5.5 for the determination of l_1 and l_2.)

For lengths inside these limits an alternative test circuit should be used or the procedures described in 5.3.4 or 5.3.5 should be adopted.

The test circuits normally used are those shown in Figures 5, 6, 7 and 9.

Documents
Document Sharing Hub
Full document details: IEC 60885-3 2015