IEC 60904-2

Edition 4.0 2023-06

INTERNATIONAL STANDARD

NORME INTERNATIONALE

colour inside

Photovoltaic devices –
Part 2: Requirements for photovoltaic reference devices

Dispositifs photovoltaïques –
Partie 2: Exigences applicables aux dispositifs photovoltaïques de référence

IEC 60904-2:2023-06(en-fr)

Documents
Document Sharing Hub

Full document details: IEC 60904-2-2023

THIS PUBLICATION IS COPYRIGHT PROTECTED
Copyright © 2023 IEC, Geneva, Switzerland

All rights reserved. Unless otherwise specified, no part of this publication may be reproduced or utilized in any form or by any means, electronic or mechanical, including photocopying and microfilm, without permission in writing from either IEC or IEC's member National Committee in the country of the requester. If you have any questions about IEC copyright or have an enquiry about obtaining additional rights to this publication, please contact the address below or your local IEC member National Committee for further information.

Droits de reproduction réservés. Sauf indication contraire, aucune partie de cette publication ne peut être reproduite ni utilisée sous quelque forme que ce soit et par aucun procédé, électronique ou mécanique, y compris la photocopie et les microfilms, sans l'accord écrit de l'IEC ou du Comité national de l'IEC du pays du demandeur. Si vous avez des questions sur le copyright de l'IEC ou si vous désirez obtenir des droits supplémentaires sur cette publication, utilisez les coordonnées ci-après ou contactez le Comité national de l'IEC de votre pays de résidence.

IEC Secretariat
3, rue de Varembé
CH-1211 Geneva 20
Switzerland

Tel.: +41 22 919 02 11
info@iec.ch
www.iec.ch

About the IEC
The International Electrotechnical Commission (IEC) is the leading global organization that prepares and publishes International Standards for all electrical, electronic and related technologies.

About IEC publications
The technical content of IEC publications is kept under constant review by the IEC. Please make sure that you have the latest edition, a corrigendum or an amendment might have been published.

IEC publications search - webstore.iec.ch/advsearchform
The advanced search enables to find IEC publications by a variety of criteria (reference number, text, technical committee, …). It also gives information on projects, replaced and withdrawn publications.

IEC Just Published - webstore.iec.ch/justpublished
Stay up to date on all new IEC publications. Just Published details all new publications released. Available online and once a month by email.

IEC Customer Service Centre - webstore.iec.ch/csc
If you wish to give us your feedback on this publication or need further assistance, please contact the Customer Service Centre: sales@iec.ch.

IEC Products & Services Portal - products.iec.ch
Discover our powerful search engine and read freely all the publications previews. With a subscription you will always have access to up to date content tailored to your needs.

Electropedia - www.electropedia.org
The world's leading online dictionary on electrotechnology, containing more than 22 300 terminological entries in English and French, with equivalent terms in 19 additional languages. Also known as the International Electrotechnical Vocabulary (IEV) online.

A propos de l'IEC
La Commission Electrotechnique Internationale (IEC) est la première organisation mondiale qui élabore et publie des Normes internationales pour tout ce qui a trait à l'électricité, à l'électronique et aux technologies apparentées.

A propos des publications IEC
Le contenu technique des publications IEC est constamment revu. Veuillez vous assurer que vous possédez l'édition la plus récente, un corrigendum ou amendement peut avoir été publié.

Recherche de publications IEC - webstore.iec.ch/advsearchform
La recherche avancée permet de trouver des publications IEC en utilisant différents critères (numéro de référence, texte, comité d'études, …). Elle donne aussi des informations sur les projets et les publications remplacées ou retirées.

IEC Just Published - webstore.iec.ch/justpublished
Restez informé sur les nouvelles publications IEC. Just Published détaille les nouvelles publications parues. Disponible en ligne et une fois par mois par email.

Service Clients - webstore.iec.ch/csc
Si vous désirez nous donner des commentaires sur cette publication ou si vous avez des questions contactez-nous: sales@iec.ch.

IEC Products & Services Portal - products.iec.ch
Découvrez notre puissant moteur de recherche et consultez gratuitement tous les aperçus des publications. Avec un abonnement, vous aurez toujours accès à un contenu à jour adapté à vos besoins.

Electropedia - www.electropedia.org
Le premier dictionnaire d'électrotechnologie en ligne au monde, avec plus de 22 300 articles terminologiques en anglais et en français, ainsi que les termes équivalents dans 19 langues additionnelles. Egalement appelé Vocabulaire Electrotechnique International (IEV) en ligne.

Documents
Document Sharing Hub

Full document details: IEC 60904-2-2023

IEC 60904-2

Edition 4.0 2023-06

INTERNATIONAL STANDARD

NORME INTERNATIONALE

colour inside

Photovoltaic devices –
Part 2: Requirements for photovoltaic reference devices

Dispositifs photovoltaïques –
Partie 2: Exigences applicables aux dispositifs photovoltaïques de référence

INTERNATIONAL
ELECTROTECHNICAL
COMMISSION

COMMISSION
ELECTROTECHNIQUE
INTERNATIONALE

ICS 27.160

ISBN 978-2-8322-6948-0

Warning! Make sure that you obtained this publication from an authorized distributor.
Attention! Veuillez vous assurer que vous avez obtenu cette publication via un distributeur agréé.

® Registered trademark of the International Electrotechnical Commission
Marque déposée de la Commission Electrotechnique Internationale

AVA Documents
Document Sharing Hub

Full document details: IEC 60904-2-2023

CONTENTS

FOREWORD ... 3
1 Scope ... 5
2 Normative references ... 5
3 Terms and definitions ... 6
4 Selection of reference device ... 8
4.1 General requirements ... 8
4.2 Additional requirements for single reference cell in a multi-cell package ... 8
4.3 Additional requirements for reference modules ... 9
4.4 Requirements for built-in shunt resistors ... 9
5 Temperature measurement ... 10
6 Electrical connections ... 10
7 Calibration ... 10
7.1 General requirements ... 10
7.2 Calibration value(s) ... 10
7.3 Spectral responsivity ... 11
7.4 Temperature coefficients ... 11
7.5 Linearity ... 11
8 Documentation and report ... 11
8.1 General ... 11
8.2 Device documentation ... 11
8.3 Calibration report ... 12
9 Marking ... 12
10 Packaging ... 12
10.1 Recommended packaging for use in natural sunlight ... 12
10.2 Recommended packaging for use under solar simulators ... 13
10.3 Single cell package ... 13
11 Care of reference devices ... 13
12 Usage of reference devices ... 14
13 Calibration of secondary reference devices against a primary reference cell ... 14
13.1 General ... 14
13.2 Natural sunlight ... 15
13.3 Simulated sunlight ... 15
13.4 Test procedure ... 15
13.5 Additional measurements ... 17
13.5.1 Spectral responsivity ... 17
13.5.2 Temperature coefficient(s) ... 17
13.5.3 Linearity ... 17
14 Calibration of working reference device against a secondary reference device ... 17
Bibliography ... 19

Figure 1 – Single cell package ... 7
Figure 2 – Single reference cell in a multi-cell package ... 8

Documents
Document Sharing Hub

Full document details: IEC 60904-2-2023

INTERNATIONAL ELECTROTECHNICAL COMMISSION

PHOTOVOLTAIC DEVICES –

Part 2: Requirements for photovoltaic reference devices

FOREWORD

1) The International Electrotechnical Commission (IEC) is a worldwide organization for standardization comprising all national electrotechnical committees (IEC National Committees). The object of IEC is to promote international co-operation on all questions concerning standardization in the electrical and electronic fields. To this end and in addition to other activities, IEC publishes International Standards, Technical Specifications, Technical Reports, Publicly Available Specifications (PAS) and Guides (hereafter referred to as "IEC Publication(s)"). Their preparation is entrusted to technical committees; any IEC National Committee interested in the subject dealt with may participate in this preparatory work. International, governmental and non-governmental organizations liaising with the IEC also participate in this preparation. IEC collaborates closely with the International Organization for Standardization (ISO) in accordance with conditions determined by agreement between the two organizations.
2) The formal decisions or agreements of IEC on technical matters express, as nearly as possible, an international consensus of opinion on the relevant subjects since each technical committee has representation from all interested IEC National Committees.
3) IEC Publications have the form of recommendations for international use and are accepted by IEC National Committees in that sense. While all reasonable efforts are made to ensure that the technical content of IEC Publications is accurate, IEC cannot be held responsible for the way in which they are used or for any misinterpretation by any end user.
4) In order to promote international uniformity, IEC National Committees undertake to apply IEC Publications transparently to the maximum extent possible in their national and regional publications. Any divergence between any IEC Publication and the corresponding national or regional publication shall be clearly indicated in the latter.
5) IEC itself does not provide any attestation of conformity. Independent certification bodies provide conformity assessment services and, in some areas, access to IEC marks of conformity. IEC is not responsible for any services carried out by independent certification bodies.
6) All users should ensure that they have the latest edition of this publication.
7) No liability shall attach to IEC or its directors, employees, servants or agents including individual experts and members of its technical committees and IEC National Committees for any personal injury, property damage or other damage of any nature whatsoever, whether direct or indirect, or for costs (including legal fees) and expenses arising out of the publication, use of, or reliance upon, this IEC Publication or any other IEC Publications.
8) Attention is drawn to the Normative references cited in this publication. Use of the referenced publications is indispensable for the correct application of this publication.
9) Attention is drawn to the possibility that some of the elements of this IEC Publication may be the subject of patent rights. IEC shall not be held responsible for identifying any or all such patent rights.

IEC 60904-2 has been prepared by IEC technical committee 82: Solar photovoltaic energy systems. It is an International Standard.

This fourth edition cancels and replaces the third edition published in 2015. This edition constitutes a technical revision.

This edition includes the following significant technical changes with respect to the previous edition:

a) added calibration procedures for calibrating PV devices at maximum power by extending the respective Clauses 12 and 13;
b) revised requirements for mandatory measurement of spectral responsivity, temperature coefficients and linearity, depending on usage and allowing some measurements on equivalent devices;
c) revised requirements for built-in shunt resistor;
d) added requirements for traceability of calibration explicitly.

Documents
Document Sharing Hub

Full document details: IEC 60904-2-2023

The text of this International Standard is based on the following documents:

Draft	Report on voting
82/2127/FDIS	82/2151/RVD

Full information on the voting for its approval can be found in the report on voting indicated in the above table.

The language used for the development of this International Standard is English.

This document was drafted in accordance with ISO/IEC Directives, Part 2, and developed in accordance with ISO/IEC Directives, Part 1 and ISO/IEC Directives, IEC Supplement, available at www.iec.ch/members_experts/refdocs. The main document types developed by IEC are described in greater detail at www.iec.ch/publications.

A list of all parts in the IEC 60904 series, published under the general title *Photovoltaic devices*, can be found on the IEC website.

The committee has decided that the contents of this document will remain unchanged until the stability date indicated on the IEC website under webstore.iec.ch in the data related to the specific document. At this date, the document will be

- reconfirmed,
- withdrawn,
- replaced by a revised edition, or
- amended.

IMPORTANT – The "colour inside" logo on the cover page of this document indicates that it contains colours which are considered to be useful for the correct understanding of its contents. Users should therefore print this document using a colour printer.

Documents
Document Sharing Hub

Full document details: IEC 60904-2-2023

PHOTOVOLTAIC DEVICES –

Part 2: Requirements for photovoltaic reference devices

1 Scope

This part of IEC 60904 gives requirements for the classification, selection, packaging, marking, calibration and care of photovoltaic reference devices.

This document applies to photovoltaic (PV) reference devices that are used to measure the irradiance of natural or simulated sunlight for the purpose of quantifying the electrical performance of photovoltaic devices (cells, modules and arrays). It does not cover photovoltaic reference devices for use under concentrated sunlight.

2 Normative references

The following documents are referred to in the text in such a way that some or all of their content constitutes requirements of this document. For dated references, only the edition cited applies. For undated references, the latest edition of the referenced document (including any amendments) applies.

IEC 60891, *Photovoltaic devices – Procedures for temperature and irradiance corrections to measured I-V characteristics*

IEC 60904-1, *Photovoltaic devices – Part 1: Measurement of photovoltaic current-voltage characteristics*

IEC 60904-3, *Photovoltaic devices – Part 3: Measurement principles for terrestrial photovoltaic (PV) solar devices with reference spectral irradiance data*

IEC 60904-4, *Photovoltaic devices – Part 4: Photovoltaic reference devices – Procedures for establishing calibration traceability*

IEC 60904-5, *Photovoltaic devices – Part 5: Determination of the equivalent cell temperature (ECT) of photovoltaic (PV) devices by the open-circuit voltage method*

IEC 60904-7, *Photovoltaic devices – Part 7: Computation of the spectral mismatch correction for measurements of photovoltaic devices*

IEC 60904-8, *Photovoltaic devices – Part 8: Measurement of spectral responsivity of a photovoltaic (PV) device*

IEC 60904-9, *Photovoltaic devices – Part 9: Classification of solar simulator characteristics*

IEC 60904-10, *Photovoltaic devices – Part 10: Methods of linear dependence and linearity measurements*

IEC TS 61836, *Solar photovoltaic energy systems – Terms, definitions and symbols*

Documents
Document Sharing Hub

Full document details: IEC 60904-2-2023

3 Terms and definitions

For the purposes of this document, the terms and definitions given in IEC TS 61836 and the following apply.

ISO and IEC maintain terminology databases for use in standardization at the following addresses:

- IEC Electropedia: available at https://www.electropedia.org/
- ISO Online browsing platform: available at https://www.iso.org/obp

3.1
calibration traceability
<of a PV reference device> requirement for any PV reference device, to tie its calibration value to SI units in an unbroken and documented chain of calibration transfers including stated uncertainties

Note 1 to entry: Photovoltaic reference devices are distinguished by their position in a chain of calibration traceability.

[SOURCE IEC 60904-4:2019, 3.6, modified – The term "traceability" has been replaced with "calibration traceability" and Note 1 to entry has been replaced.]

3.2
reference device
traceably calibrated photovoltaic device

Note 1 to entry: Normally used to measure natural or simulated solar irradiance or to set solar simulator irradiance levels for measuring the performance of other photovoltaic devices.

3.3
primary reference device
photovoltaic reference device with calibration based on a secondary standard for irradiance traceable to SI units as defined in IEC 60904-4

Note 1 to entry: Typically, a PV cell is used as a reference device for the measurement of natural or simulated solar irradiance.

Note 2 to entry: Primary references are normally used by calibration and testing laboratories to calibrate secondary references.

Note 3 to entry: Normally calibrated at periodic intervals.

3.4
secondary reference device
photovoltaic reference device calibrated in natural or simulated sunlight against a primary reference device

Note 1 to entry: Secondary references are normally used by calibration and testing laboratories to calibrate working references, but also for daily routine measurements, in industrial production and in monitoring.

Note 2 to entry: Normally calibrated at periodic intervals.

3.5
working reference device
photovoltaic reference device calibrated in natural or simulated sunlight against a secondary reference device

Note 1 to entry: Working references are normally used for daily routine measurements, in industrial production and in monitoring.

Note 2 to entry: Normally calibrated at periodic intervals.

Documents
Document Sharing Hub

Full document details: IEC 60904-2-2023

3.6
reference cell
reference device consisting of a single photovoltaic cell

Note 1 to entry: For practical reasons, such cells are small in surface area, and are usually mounted on a fixture which ensures reproducibility in mounting, thermal control, electrical connections and protects the device. A typical sample is sketched in Figure 1.

Note 2 to entry: Normally the reference cells are also provided with a protective window and embedded in an encapsulant.

Note 3 to entry: Recommended use: as a laboratory primary, secondary and working reference.

Note 4 to entry: If the encapsulation system has been demonstrated to withstand long-term outdoor exposure, applying test levels according to the IEC 61215 series [1], such reference cells can also be suitable to be used as a monitoring device for long-term assessment of operational PV arrays.

Note 5 to entry: If the reference cell is provided with a protective window but without encapsulant, then it should only be used when measuring the performance of other PV devices using direct beam natural or simulated sunlight.

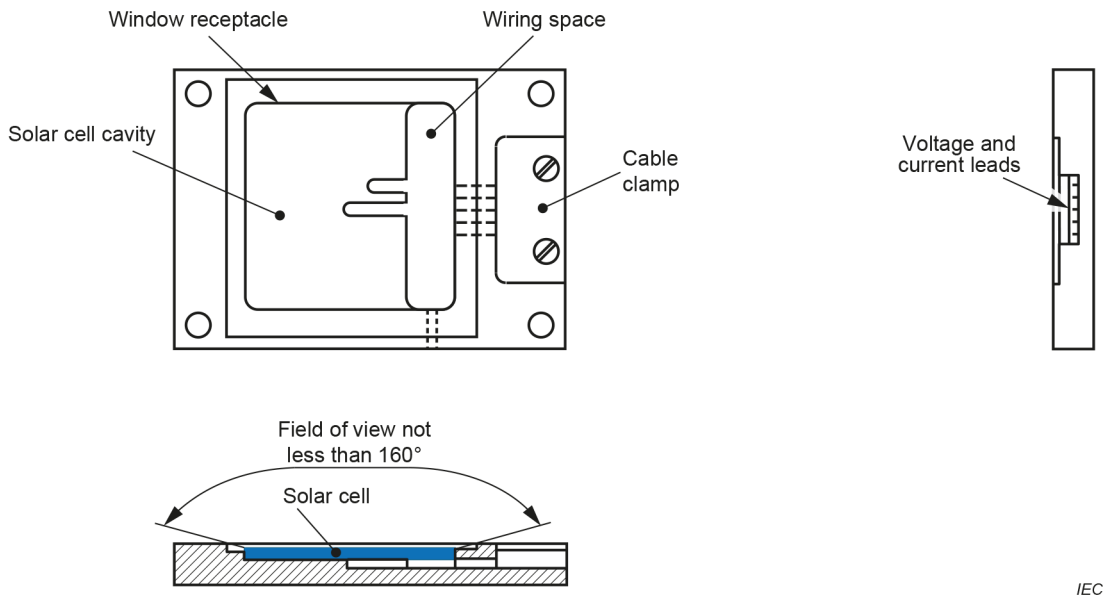

Figure 1 – Single cell package

3.7
single reference cell in a multi-cell package
reference device consisting of a single photovoltaic cell mounted in a package such that frame, encapsulation system, shape, size and spacing of the cells surrounding it are the same as in the PV module to be tested

Note 1 to entry: The surrounding cells may be real or dummies that have the same optical properties.

3.8
reference module
reference device consisting of a photovoltaic module

Note 1 to entry: Recommended use: for measuring other modules in order to achieve correspondence of dimensions, mechanical construction, optical properties and electrical circuitry of the reference module and test module, so as to minimize discrepancies due to solar simulator spatial non-uniformity, internal reflections, temperature distribution and spectral mismatch.

Note 2 to entry: As the diffuse component of natural sunlight and non-normal incidence of simulated sunlight interact with encapsulants and back sheets of a PV module and influence the amount of irradiance which a particular cell receives, it is recommended that reference devices used for measuring PV modules, sub-assemblies of PV modules and PV arrays be encapsulated matching the mechanical and optical features of the device under test.

AVA Documents
Document Sharing Hub
Full document details: IEC 60904-2-2023

3.9
built-in shunt resistor
resistor connected across the output terminals of photovoltaic devices including connection wiring

Note 1 to entry: The resistor shunts the output of the photovoltaic device providing an output voltage to be measured and avoiding user-provided means of establishing short-circuit condition.

Note 2 to entry: For details consult 4.4.

4 Selection of reference device

4.1 General requirements

Depending on their intended use, reference devices need to meet different requirements in terms of their spectral responsivity, mechanical construction, optical properties, dimensions and electrical circuit. The spectral responsivity of the reference device, for example, is determined by the transmission of any protective window in front of the device and the spectral responsivity of the device itself. Therefore, the overall spectral responsivity can be adapted by using suitable filters as or in addition to the protective window.

Reference devices should be made using a PV technology that is known to be stable with time. In particular, the calibration value should not change after the reference device has been exposed to solar irradiation, device temperatures different from its calibration temperature and/or extended storage in the dark. The photovoltaic characteristics of a reference device shall be stable according to the requirements in Clause 11.

The reference device shall be constructed such that the photovoltaic performance parameters, in particular short-circuit current and maximum power, can be measured. The only exception are devices with a built-in shunt resistor, see 4.4.

4.2 Additional requirements for single reference cell in a multi-cell package

The dotted line in Figure 2 indicates the minimum acceptable size of a multi-cell package. For other cell arrangements, such as half-cut cells, an analogous configuration applies.

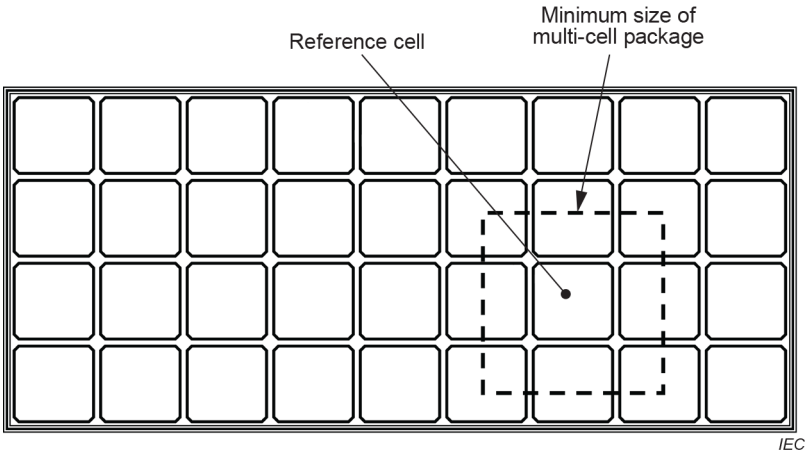

Figure 2 – Single reference cell in a multi-cell package

Documents
Document Sharing Hub
Full document details: IEC 60904-2-2023

4.3 Additional requirements for reference modules

Additional requirements apply to reference modules.

a) Bypass diodes:

- general reference modules, which are used to measure a range of module types and geometries, should not contain bypass diodes. The presence or absence of bypass diodes shall be noted and considered in conjunction with the measurement conditions, in particular spatial non-uniformity of the irradiance on the module during measurement;
- for reference modules, which are intended to be matched to the module under test, the number, type and connection of bypass diodes (if present) shall match those in the module under test.

b) If they are made from discrete cells, these should be matched as follows depending on the intended use of the reference module:

- if only the short-circuit current of the reference module will be used, the short-circuit current of the individual cells should be matched to within ±1 %;
- if other parameters (such as maximum power) are used additionally or exclusively, both the short-circuit current and the fill factor of the individual cells should be matched to within ±1 %.

The matching of the individual cells is the responsibility of the manufacturer of the reference module, bearing in mind that matching can also be influenced by encapsulation or lamination. The cell matching need not be checked by the calibration laboratory. However, if I-V curves of the reference module indicate inconsistent response (i.e. obvious steps are noted in the I-V curve), this should be discussed between calibration laboratory and the client supplying the module before proceeding with calibration.

4.4 Requirements for built-in shunt resistors

The built-in shunt resistor (see 3.9) should be chosen such as to ensure that the reference device operates sufficiently near to short-circuit condition, meeting the requirement in Formula (1):

$$R_{\mathrm{CAL}} < \frac{0{,}2 \times V_{\mathrm{OC}}}{I_{\mathrm{SC}}} \tag{1}$$

where

R_{CAL} is the built-in shunt resistor;

I_{SC} is the short-circuit current of the reference device at desired reference condition;

V_{OC} is the open circuit voltage of the reference device at desired reference condition.

The long-term stability of the built-in shunt resistor shall also meet the stability requirements of the reference device. Calibration values of such reference devices shall be measured as the voltage drop across the built-in shunt resistor and stated with the dimension [V]. The temperature coefficient of the built-in shunt resistor is part of the temperature coefficient of the calibration value of the reference device. As the uncertainty in the calibration can be strongly dependent on the built-in shunt resistor stability and temperature coefficient, respective values should be provided with the reference cell data sheet.

It is recommended that the shunt resistor be a removable 4-wire resistor, to allow for standard (current-based) measurements of spectral responsivity and periodic checking of the reference device stability by measuring an I-V curve in accordance with IEC 60904-1. However, the reproducibility of the electrical connection shall be maintained.

Documents
Document Sharing Hub
Full document details: IEC 60904-2-2023

Formula (1) means that the measured output voltage of a shunted reference cell should be less than 20 % of its open circuit voltage. For typical crystalline silicon this equates to about 120 mV output.

5 Temperature measurement

Means shall be provided for determining the reference cell temperature or, for reference modules, the equivalent cell temperature (ECT), according to IEC 60904-5. Temperature sensors and instrumentation shall have instrumental measurement uncertainty of 1 °C or less. The required uncertainty for temperature measurements for the cell junction shall be less than 2,0 °C for all reference devices.

6 Electrical connections

The electrical connections to reference cells without built-in shunt resistor shall consist of a four-wire contact system (Kelvin probe). Measurement errors due to voltage drops along the cell's contact bars and the package wiring shall be avoided.

The electrical connections to the reference module shall be designed to meet the requirements of IEC 60904-1.

7 Calibration

7.1 General requirements

Each calibration of a reference device shall be made with a calibration procedure that is traceable according to IEC 60904-4. Any measurement instrument used in the calibration procedure shall be an instrument with an unbroken traceability chain.

The laboratory performing the calibration of the reference device shall maintain a documented uncertainty analysis as well as documented repeatability and results from interlaboratory comparisons.

7.2 Calibration value(s)

Each reference device shall be calibrated in terms of its calibration value(s) at the desired reference conditions. Calibration values shall be reported together with the three main parameters of total irradiance, device junction temperature and spectral irradiance. The most common calibration conditions are standard test conditions (STC). A calibration at STC shall refer to a total irradiance of 1 000 W m^{-2}, a device junction temperature of 25 °C and the reference spectral irradiance distribution as defined in IEC 60904-3. Sometimes calibration is required at other conditions. A reference device can have multiple calibration values for different desired reference conditions. In particular, IEC 61853-1 [2][1] requires the use of a reference device at a range of irradiances and temperatures and therefore the calibration at the respective conditions.

Methods for calibrating primary reference devices are included in IEC 60904-4. A procedure of calibrating secondary reference devices is described in Clause 13. The calibration of working reference devices is treated in Clause 14.

[1] Numbers in square brackets refer to the Bibliography.

Documents
Document Sharing Hub
Full document details: IEC 60904-2-2023

7.3 Spectral responsivity

In general, the spectral responsivity at short-circuit current conditions of each reference device shall be measured in accordance with IEC 60904-8. For exceptions related to working references, see Clause 14.

7.4 Temperature coefficients

The determination of the temperature coefficient(s) of each reference device in accordance with IEC 60891 is in general optional but depending on usage might be mandatory, and in any case is strongly recommended. If the temperature coefficient(s) are determined, also their linear dependence in accordance with IEC 60904-10 shall be reported. For exceptions related to working references, see Clause 14.

7.5 Linearity

The determination of linearity in accordance with IEC 60904-10 is in general optional but depending on usage might be mandatory, and in any case is strongly recommended. For exceptions related to working references, see Clause 14.

8 Documentation and report

8.1 General

The information given in 8.2 and 8.3 shall be recorded for each reference device.

8.2 Device documentation

The data sheet shall be compiled by the manufacturer of the reference device and contain the following information:

a) unique identification of the device;
b) cell manufacturer and device manufacturer;
c) material type;
d) type of package;
e) type and dimension of cell(s);
f) circuit diagram, in particular of any connectors;
g) type of temperature sensor (where applicable) and its uncertainty;
h) shunt resistor type, nominal resistance and temperature coefficient (where applicable).

For reference modules, the following information shall be recorded in addition:

i) manufacturer of module;
j) model designation;
k) serial number;
l) cell technology;
m) construction and dimensions of module;
n) electrical circuit layout;
o) presence or absence of bypass diodes and if present their number and type.

Documents
Document Sharing Hub
Full document details: IEC 60904-2-2023