IEC 60917-1

Edition 2.0 2019-09

INTERNATIONAL STANDARD

NORME INTERNATIONALE

Modular order for the development of mechanical structures for electrical and electronic equipment practices – Part 1: Generic standard

Ordre modulaire pour le développement des structures mécaniques pour les infrastructures électriques et électroniques – Partie 1: Norme générique

IEC 60917-1:2019-09(en-fr)

Documents
Document Sharing Hub

Full document details: IEC 60917-1-2019

THIS PUBLICATION IS COPYRIGHT PROTECTED
Copyright © 2019 IEC, Geneva, Switzerland

All rights reserved. Unless otherwise specified, no part of this publication may be reproduced or utilized in any form or by any means, electronic or mechanical, including photocopying and microfilm, without permission in writing from either IEC or IEC's member National Committee in the country of the requester. If you have any questions about IEC copyright or have an enquiry about obtaining additional rights to this publication, please contact the address below or your local IEC member National Committee for further information.

Droits de reproduction réservés. Sauf indication contraire, aucune partie de cette publication ne peut être reproduite ni utilisée sous quelque forme que ce soit et par aucun procédé, électronique ou mécanique, y compris la photocopie et les microfilms, sans l'accord écrit de l'IEC ou du Comité national de l'IEC du pays du demandeur. Si vous avez des questions sur le copyright de l'IEC ou si vous désirez obtenir des droits supplémentaires sur cette publication, utilisez les coordonnées ci-après ou contactez le Comité national de l'IEC de votre pays de résidence.

IEC Central Office
3, rue de Varembé
CH-1211 Geneva 20
Switzerland

Tel.: +41 22 919 02 11
info@iec.ch
www.iec.ch

About the IEC
The International Electrotechnical Commission (IEC) is the leading global organization that prepares and publishes International Standards for all electrical, electronic and related technologies.

About IEC publications
The technical content of IEC publications is kept under constant review by the IEC. Please make sure that you have the latest edition, a corrigendum or an amendment might have been published.

IEC publications search - webstore.iec.ch/advsearchform
The advanced search enables to find IEC publications by a variety of criteria (reference number, text, technical committee,…). It also gives information on projects, replaced and withdrawn publications.

IEC Just Published - webstore.iec.ch/justpublished
Stay up to date on all new IEC publications. Just Published details all new publications released. Available online and once a month by email.

IEC Customer Service Centre - webstore.iec.ch/csc
If you wish to give us your feedback on this publication or need further assistance, please contact the Customer Service Centre: sales@iec.ch.

Electropedia - www.electropedia.org
The world's leading online dictionary on electrotechnology, containing more than 22 000 terminological entries in English and French, with equivalent terms in 16 additional languages. Also known as the International Electrotechnical Vocabulary (IEV) online.

IEC Glossary - std.iec.ch/glossary
67 000 electrotechnical terminology entries in English and French extracted from the Terms and Definitions clause of IEC publications issued since 2002. Some entries have been collected from earlier publications of IEC TC 37, 77, 86 and CISPR.

A propos de l'IEC
La Commission Electrotechnique Internationale (IEC) est la première organisation mondiale qui élabore et publie des Normes internationales pour tout ce qui a trait à l'électricité, à l'électronique et aux technologies apparentées.

A propos des publications IEC
Le contenu technique des publications IEC est constamment revu. Veuillez vous assurer que vous possédez l'édition la plus récente, un corrigendum ou amendement peut avoir été publié.

Recherche de publications IEC - webstore.iec.ch/advsearchform
La recherche avancée permet de trouver des publications IEC en utilisant différents critères (numéro de référence, texte, comité d'études,…). Elle donne aussi des informations sur les projets et les publications remplacées ou retirées.

IEC Just Published - webstore.iec.ch/justpublished
Restez informé sur les nouvelles publications IEC. Just Published détaille les nouvelles publications parues. Disponible en ligne et une fois par mois par email.

Service Clients - webstore.iec.ch/csc
Si vous désirez nous donner des commentaires sur cette publication ou si vous avez des questions contactez-nous: sales@iec.ch.

Electropedia - www.electropedia.org
Le premier dictionnaire d'électrotechnologie en ligne au monde, avec plus de 22 000 articles terminologiques en anglais et en français, ainsi que les termes équivalents dans 16 langues additionnelles. Egalement appelé Vocabulaire Electrotechnique International (IEV) en ligne.

Glossaire IEC - std.iec.ch/glossary
67 000 entrées terminologiques électrotechniques, en anglais et en français, extraites des articles Termes et Définitions des publications IEC parues depuis 2002. Plus certaines entrées antérieures extraites des publications des CE 37, 77, 86 et CISPR de l'IEC.

Documents
Document Sharing Hub

Full document details: IEC 60917-1-2019

IEC 60917-1

Edition 2.0 2019-09

INTERNATIONAL STANDARD

NORME INTERNATIONALE

Modular order for the development of mechanical structures for electrical and electronic equipment practices – Part 1: Generic standard

Ordre modulaire pour le développement des structures mécaniques pour les infrastructures électriques et électroniques – Partie 1: Norme générique

INTERNATIONAL
ELECTROTECHNICAL
COMMISSION

COMMISSION
ELECTROTECHNIQUE
INTERNATIONALE

ICS 31.240

ISBN 978-2-8322-7164-3

Warning! Make sure that you obtained this publication from an authorized distributor.
Attention! Veuillez vous assurer que vous avez obtenu cette publication via un distributeur agréé.

® Registered trademark of the International Electrotechnical Commission
Marque déposée de la Commission Electrotechnique Internationale

Documents
Document Sharing Hub

Full document details: IEC 60917-1-2019

CONTENTS

FOREWORD 4
INTRODUCTION 6
1 Scope 7
2 Normative references 7
3 Terms and definitions 9
4 Fundamentals and background information 19
4.1 General 19
4.2 Structures of electrical and electronic equipment practices 20
4.3 Dimensional co-ordination with adjacent technical fields 20
4.4 Preparation of standards for new equipment practices 21
5 Modular order details 24
5.1 Modular grid 24
5.2 Pitches 24
5.2.1 Base and multiple pitches for equipment practice 24
5.2.2 Mounting pitches example 25
5.3 Co-ordination dimensions 26
5.4 Illustration of the modular order 27

Figure 1 – Pitch 10
Figure 2 – Grid 11
Figure 3 – Rack 12
Figure 4 – Cabinet 12
Figure 5 – Case 13
Figure 6 – Swing frame 13
Figure 7 – Subrack 14
Figure 8 – Chassis 14
Figure 9 – Plug-in unit 15
Figure 10 – Console 15
Figure 11 – Plug-in unit guide 15
Figure 12 – Slides 16
Figure 13 – Telescopic slides 16
Figure 14 – Mounting frame 17
Figure 15 – Mounting plate 17
Figure 16 – Front panel 17
Figure 17 – Backplane 18
Figure 18 – Cabinet panel 18
Figure 19 – Door 19
Figure 20 – Mounting section 19
Figure 21 – Structures of electrical and electronic equipment practices 20
Figure 22 – Structure of equipment practice standards 23
Figure 23 – Modular grid 24
Figure 24 – Partitioning of co-ordination dimensions C_0 with the same mounting pitch mp 26

AVA Documents
Document Sharing Hub

Full document details: IEC 60917-1-2019

Figure 25 – Examples of the application of the modular order 28

Table 1 – Publications containing standardized modular dimensions and/or related documents 21

Table 2 – Co-ordination dimensions C_i 26

Documents
Document Sharing Hub

Full document details: IEC 60917-1-2019

INTERNATIONAL ELECTROTECHNICAL COMMISSION

MODULAR ORDER FOR THE DEVELOPMENT OF MECHANICAL STRUCTURES FOR ELECTRICAL AND ELECTRONIC EQUIPMENT PRACTICES –

Part 1: Generic standard

FOREWORD

1) The International Electrotechnical Commission (IEC) is a worldwide organization for standardization comprising all national electrotechnical committees (IEC National Committees). The object of IEC is to promote international co-operation on all questions concerning standardization in the electrical and electronic fields. To this end and in addition to other activities, IEC publishes International Standards, Technical Specifications, Technical Reports, Publicly Available Specifications (PAS) and Guides (hereafter referred to as "IEC Publication(s)"). Their preparation is entrusted to technical committees; any IEC National Committee interested in the subject dealt with may participate in this preparatory work. International, governmental and non-governmental organizations liaising with the IEC also participate in this preparation. IEC collaborates closely with the International Organization for Standardization (ISO) in accordance with conditions determined by agreement between the two organizations.
2) The formal decisions or agreements of IEC on technical matters express, as nearly as possible, an international consensus of opinion on the relevant subjects since each technical committee has representation from all interested IEC National Committees.
3) IEC Publications have the form of recommendations for international use and are accepted by IEC National Committees in that sense. While all reasonable efforts are made to ensure that the technical content of IEC Publications is accurate, IEC cannot be held responsible for the way in which they are used or for any misinterpretation by any end user.
4) In order to promote international uniformity, IEC National Committees undertake to apply IEC Publications transparently to the maximum extent possible in their national and regional publications. Any divergence between any IEC Publication and the corresponding national or regional publication shall be clearly indicated in the latter.
5) IEC itself does not provide any attestation of conformity. Independent certification bodies provide conformity assessment services and, in some areas, access to IEC marks of conformity. IEC is not responsible for any services carried out by independent certification bodies.
6) All users should ensure that they have the latest edition of this publication.
7) No liability shall attach to IEC or its directors, employees, servants or agents including individual experts and members of its technical committees and IEC National Committees for any personal injury, property damage or other damage of any nature whatsoever, whether direct or indirect, or for costs (including legal fees) and expenses arising out of the publication, use of, or reliance upon, this IEC Publication or any other IEC Publications.
8) Attention is drawn to the Normative references cited in this publication. Use of the referenced publications is indispensable for the correct application of this publication.
9) Attention is drawn to the possibility that some of the elements of this IEC Publication may be the subject of patent rights. IEC shall not be held responsible for identifying any or all such patent rights.

International Standard IEC 60917-1 has been prepared by subcommittee 48D: Mechanical structures for electrical and electronic equipment, of IEC technical committee 48: Electrical connectors and mechanical structures for electrical and electronic equipment.

This second edition cancels and replaces the first edition published in 1998 and its Amendment 1:2000. This edition constitutes a technical revision.

This edition includes the following significant technical changes with respect to the previous edition:

a) added information on newly developed detail specification standards of mechanical structures for the electrical and electronic equipment practices;
b) added information on newly developed performance test standards for the verifications of environmental performances and safety aspects and issues of the thermal performance and thermal management for the electrical and electronic equipment practices;

Documents
Document Sharing Hub
Full document details: IEC 60917-1-2019

c) introduced the relations between the mechanical structure for electrical and electronic system, the verification of environmental performance and safety aspects and issues of the thermal performance and thermal management for the electrical and electronic equipment practices.

The text of this standard is based on the following documents:

FDIS	Report on voting
48D/703/FDIS	48D/708/RVD

Full information on the voting for the approval of this standard can be found in the report on voting indicated in the above table.

This publication has been drafted in accordance with the ISO/IEC Directives, Part 2.

Future standards in this series will carry the new general title as cited above. Titles of existing standards in this series will be updated at the time of the next edition.

A list of all parts in the IEC 60917 series, published under the general title *Modular order for the development of mechanical structures for electrical and electronic equipment practices*, can be found on the IEC website.

The committee has decided that the contents of this publication will remain unchanged until the stability date indicated on the IEC web site under "http://webstore.iec.ch" in the data related to the specific publication. At this date, the publication will be

- reconfirmed,
- withdrawn,
- replaced by a revised edition, or
- amended.

Documents
Document Sharing Hub

Full document details: IEC 60917-1-2019

INTRODUCTION

There is a continuous trend towards higher functional integration and smaller electronic components and integrated circuits. At the same time, new manufacturing methods, automatic manufacturing and testing equipment, and Computer Aided Engineering (CAE) systems have created commercial advantages for their users.

For users to take technical and economic advantage of these new components and technologies during planning, design, manufacturing, and testing, it is necessary for equipment practices to meet the following requirements (see IEC Guide 103): arrangement of products with a minimum loss of area and space;

– dimensional interchangeability of products, e.g. regarding overall dimensions, mounting dimensions (fixing holes, cut-out, etc.);
– dimensional compatibility and determination of interface dimensions of products which:
  - are combined with other products, e.g. instruments, racks, panels and cabinets, etc.;
  - are used in buildings that have been built in accordance with a modular system, e.g. column spacing, room height, door height, etc.

An obstacle arises from the use of two systems of dimensioning (inch – metre) that are not compatible with each other. The use of an interface between both dimensioning systems represents one way around this obstacle. The recommendation is:

– to use only one dimensioning system and to use SI units.

The dimensions given in 5.3 of this document have been taken from System I of IEC Guide 103 in consideration with other documents on dimensional coordination.

In accordance with the above considerations, IEC 60917-1 Ed.1 was published in 1998. This generic standard for mechanical structures for electronic equipment practices has been used to meet advanced requirements for various industrial applications of micro-electronics technology.

After publication of this generic standard, development of dimensional sectional and detail specifications consisting of the metric 25 mm modular standards, IEC 60917-2-X, and 19 inch (in) conventional standards, IEC 60297-3-XXX, was undertaken. In parallel, standards to address environmental performance and safety aspects of the mechanical structures were developed as the IEC 61587 series. All these standards are based on indoor system applications. The next step for the mechanical structure was the developments of the IEC 61969 series for outdoor applications.

In the first decade of the 21st century, the IEC 62194 and IEC 62610 series were developed to define the verification of the thermal performance of enclosures and address thermal management issues of the electrical and electronic equipment practices.

This document describes the relationships between the mechanical structure for electrical and electronic systems, the verification of environmental performance and safety aspects, and the issues of the thermal performance and of the thermal management for the electrical and electronic equipment practices.

Documents
Document Sharing Hub
Full document details: IEC 60917-1-2019

MODULAR ORDER FOR THE DEVELOPMENT OF MECHANICAL STRUCTURES FOR ELECTRICAL AND ELECTRONIC EQUIPMENT PRACTICES –

Part 1: Generic standard

1 Scope

This part of IEC 60917 specifies the relationships between equipment practices and the modular order which are applicable to the main structural dimensions of electronic and electrical equipment mounted in various installations where dimensional interfaces have to be considered for mechanical compatibility.

This document also established terms for parts and assemblies of mechanical structures for electrical and electronic equipment, to clarify the specific relations between equipment practices and modular order.

2 Normative references

The following documents are referred to in the text in such a way that some or all of their content constitutes requirements of this document. For dated references, only the edition cited applies. For undated references, the latest edition of the referenced document (including any amendments) applies.

IEC 60050-581, *International Electrotechnical Vocabulary – Part 581: Electromechanical components for electronic equipment*

IEC 60297 (all parts), *Mechanical structures for electronic equipment*

IEC 60297-3-100, *Mechanical structures for electronic equipment – Dimensions of mechanical structures of the 482,6 mm (19 in) series – Part 3-100: Basic dimensions of front panels, subracks, chassis, racks and cabinets*

IEC 60297-3-101, *Mechanical structures for electronic equipment – Dimensions of mechanical structures of the 482,6 mm (19 in) series – Part 3-101: Subracks and associated plug-in units*

IEC 60297-3-102, *Mechanical structures for electronic equipment – Dimensions of mechanical structures of the 482,6 mm (19 in) series – Part 3-102: Injector/extractor handle*

IEC 60297-3-103, *Mechanical structures for electronic equipment – Dimensions of mechanical structures of the 482,6 mm (19 in) series – Part 3-103: Keying and alignment pin*

IEC 60297-3-104, *Mechanical structures for electronic equipment – Dimensions of mechanical structures of the 482,6 mm (19 in) series – Part 3-104: Connector dependent interface dimensions of subracks and plug-in units*

IEC 60297-3-105, *Mechanical structures for electronic equipment – Dimensions of mechanical structures of the 482,6 mm (19 in) series – Part 3-105: Dimensions and design aspects for 1U high chassis*

IEC 60297-3-106, *Mechanical structures for electronic equipment – Dimensions of mechanical structures of the 482,6 mm (19 in) series – Part 3-106: Adaptation dimensions for subracks and chassis applicable with metric cabinets or racks in accordance with IEC 60917-2-1*

AVA Documents
Document Sharing Hub

Full document details: IEC 60917-1-2019

IEC 60297-3-107, *Mechanical structures for electronic equipment – Dimensions of mechanical structures of the 482,6 mm (19 in) series – Part 3-107: Dimensions of subracks and plug-in units, small form factor*

IEC 60297-3-108, *Mechanical structures for electronic equipment – Dimensions of mechanical structures of the 482,6 mm (19 in) series – Part 3-108: Dimensions of R-type subracks and plug-in units*

IEC 60297-3-109, *Mechanical structures for electrical and electronic equipment – Dimensions of mechanical structures of the 482,6 mm (19 in) series – Part 3-109: Dimensions of chassis for embedded computing devices*

IEC 60297-3-110, *Mechanical structures for electrical and electronic equipment – Dimensions of mechanical structures of the 482,6 mm (19 in) series – Part 3-110: Residential racks and cabinets for smart houses*

IEC TR 60668, *Dimensions of panel areas and cut-outs for panel and rack-mounted industrial-process measurement and control instruments*

IEC 60917-2, *Modular order for the development of mechanical structures for electronic equipment practices – Part 2: Sectional specification – Interface co-ordination dimensions for the 25 mm equipment practice*

IEC 60917-2-1, *Modular order for the development of mechanical structures for electronic equipment practices – Part 2: Sectional specification – Interface co-ordination dimensions for the 25 mm equipment practice – Section 1: Detail specification – Dimensions for cabinets and racks*

IEC 60917-2-2, *Modular order for the development of mechanical structures for electronic equipment practices – Part 2: Sectional specification – Interface co-ordination dimensions for the 25 mm equipment practice – Section 2: Detail specification – Dimensions for subracks, chassis, backplanes, front panels and plug-in units*

IEC 60917-2-3, *Modular order for the development of mechanical structures for electronic equipment practices – Part 2-3: Sectional specification – Interface co-ordination dimensions for the 25 mm equipment practice – Extended detail specification – Dimensions for subracks, chassis, backplanes, front panels and plug-in units*

IEC 60917-2-4, *Modular order for the development of mechanical structures for electronic equipment practices – Part 2-4: Sectional specification – Interface co-ordination dimensions for the 25 mm equipment practice – Adaptation dimensions for subracks or chassis applicable in cabinets or racks in accordance with IEC 60297-3-100 (19 in)*

IEC 60917-2-5, *Modular order for the development of mechanical structures for electronic equipment practices – Part 2-5: Sectional specification – Interface co-ordination dimensions for the 25 mm equipment practice – Cabinet interface dimensions for miscellaneous equipment*

IEC 61554, *Panel mounted equipment – Electrical measuring instruments – Dimensions for panel mounting*

IEC 61587 (all parts), *Mechanical structures for electronic equipment – Tests for IEC 60917 and IEC 60297 series*

IEC 61969-1, *Mechanical structures for electronic equipment – Outdoor enclosures – Part 1: Design guidelines*

Documents
Document Sharing Hub

Full document details: IEC 60917-1-2019

IEC 61969-2, *Mechanical structures for electronic equipment – Outdoor enclosures – Part 2: Coordination dimensions*

IEC 61969-3, *Mechanical structures for electronic equipment – Outdoor enclosures – Part 3: Environmental requirements, tests and safety aspects*

IEC 62194, *Method of evaluating the thermal performance of enclosures*

IEC TS 62454, *Mechanical structures for electronic equipment – Design guide: Interface dimensions and provisions for water cooling of electronic equipment within cabinets of the IEC 60297 and IEC 60917 series*

IEC 62610 (all parts), *Mechanical structures for electrical and electronic equipment – Thermal management for cabinets in accordance with IEC 60297 and IEC 60917 series*

IEC Guide 103:1980, *Guide on dimensional co-ordination*

ISO 1006, *Building construction – Modular coordination – Basic module*

ISO 1040, *Building construction – Modular coordination – Multimodules for horizontal coordinating dimensions*

ISO 1791, *Building construction – Modular co-ordination – Vocabulary*

ISO 2848, *Building construction – Modular coordination – Principles and rules*

ISO 3394, *Packaging – Complete, filled transport packages and unit loads – Dimensions of rigid rectangular packages*

ISO 3676, *Packaging – Complete, filled transport packages and unit loads – Unit load dimensions*

ISO 6514, *Building construction – Modular coordination – Sub-modular increments*

ISO 80000-1:2009, *Quantities and units – Part 1: General*

ISO 80000-3:2006, *Quantities and units – Part 3: Space and time*

3 Terms and definitions

For the purposes of this document, the terms and definitions given in IEC 60050-581 as well as the following apply.

ISO and IEC maintain terminological databases for use in standardization at the following addresses:

- IEC Electropedia: available at http://www.electropedia.org/
- ISO Online browsing platform: available at http://www.iso.org/obp

3.1
equipment practice
mechanical structure involved in housing and mounting of electrical, electronic and electromechanical systems

Note 1 to entry: The equipment practice provides for compatibility between mechanical parts, electrical interconnections and electrical and electronic components.

AVA Documents
Document Sharing Hub

Full document details: IEC 60917-1-2019

3.2
modular order
set of rules which establishes a relationship between co-ordination dimensions and the base pitch, multiple pitches and mounting pitches to be used in equipment practice

3.3
co-ordination dimension
reference dimension used to co-ordinate mechanical interfaces. This is not a manufacturing dimension with a tolerance.

3.4
aperture dimension
special co-ordination dimension for the usable space between features (structural parts)

Note 1 to entry: The actual inside dimension of an aperture can only increase.

3.5
n
multiplier having values in continuous series of integers 1, 2, 3, ...

3.6
pitch
one division step of a regularly subdivided coordinate

SEE: Figure 1.

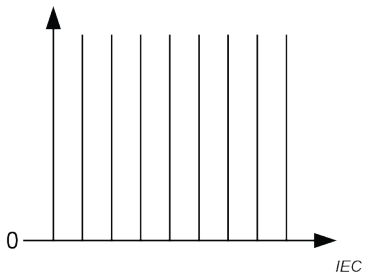

Figure 1 – Pitch

3.7
base pitch
p
smallest distance between adjacent grid lines used in the equipment practices

3.8
multiple pitch
Mp
integer multiple of the base pitch

3.9
mounting pitch
mp
pitch used to arrange parts or assemblies in a given space

Note 1 to entry: The nominal value of a mounting pitch is achieved by using a base or multiple pitch multiplied by a factor F from Table 2.

Note 2 to entry: Actual dimensions used in an equipment practice are created for the nominal mounting pitch and they include manufacturing tolerance.

Documents
Document Sharing Hub
Full document details: IEC 60917-1-2019

3.10
reference plane
theoretical plane without thickness or tolerances used to define spaces

3.11
grid
two- or three-dimensional arrangement of pitches used to coordinate a position, complying with the modular order

SEE: Figure 2.

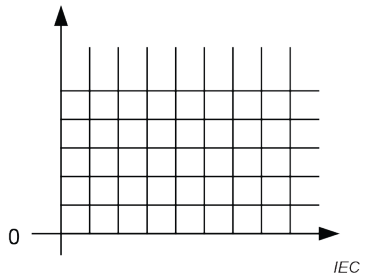

Figure 2 – Grid

3.12
module
three-dimensional structure where all sides are multiples of whole numbers of the pitch, it can also be used in a two-dimensional grid.

Note 1 to entry: One dimensional module is often called unit (U) in some documents.

3.13
suite of racks
suite of cabinets
row of racks or cabinets placed side by side

3.14
rack
free-standing or fixed structure for housing electronic or electrical equipment

Documents
Document Sharing Hub
Full document details: IEC 60917-1-2019

SEE: Figure 3.

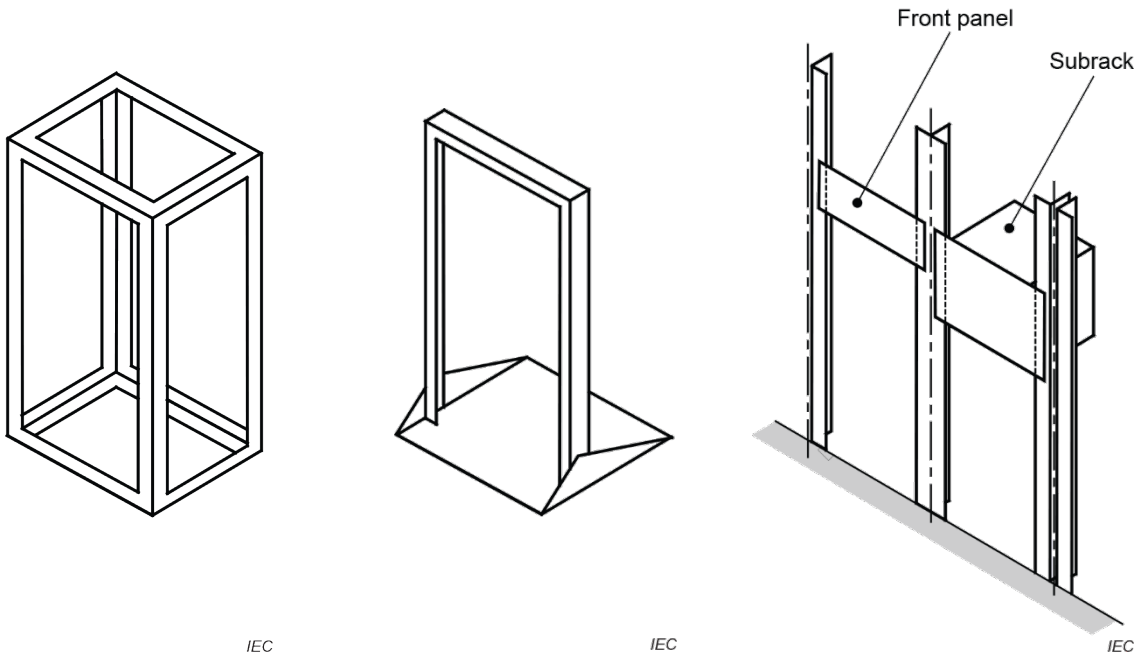

Example 1 **Example 2** **Example 3**

Figure 3 – Rack

3.15
cabinet
free-standing and self-supporting enclosure for housing electronic and/or electrical equipment. It is usually fitted with doors and/or side panels which may or may not be removable

SEE: Figure 4.

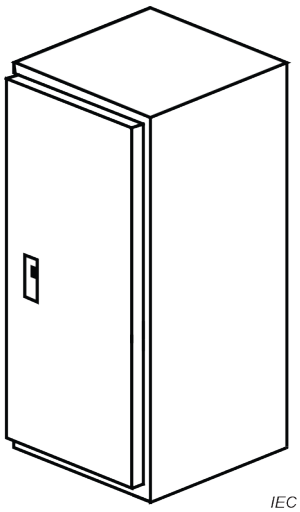

Figure 4 – Cabinet

Documents
Document Sharing Hub
Full document details: IEC 60917-1-2019

3.16
case
table, bench or wall mounted enclosure in which electronic and /or electrical equipment can be housed

SEE: Figure 5.

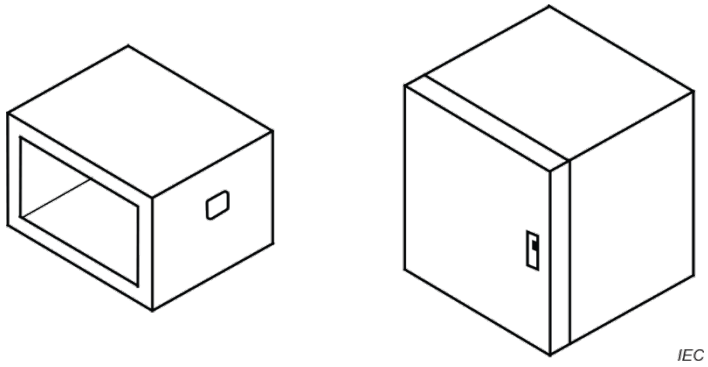

Figure 5 – Case

3.17
swing frame
hinged frame for housing electronic and/or electrical equipment

Note 1 to entry: The hinge frame swings to permit access to the back.

SEE: Figure 6.

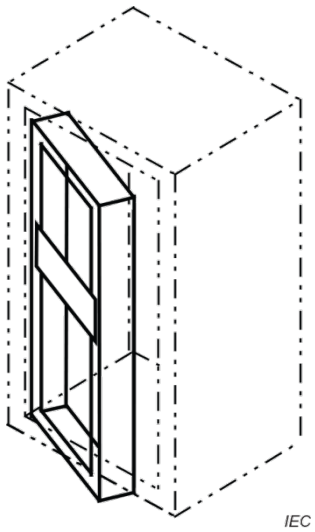

Figure 6 – Swing frame

3.18
subrack
structural unit for housing printed boards with components inserted, and plug-in units

Documents
Document Sharing Hub
Full document details: IEC 60917-1-2019

SEE: Figure 7.

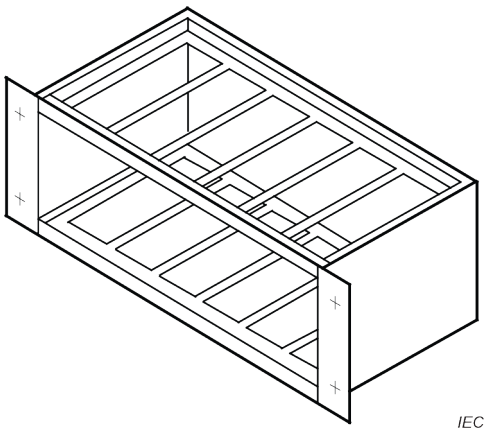

Figure 7 – Subrack

3.19
chassis
mechanical structure designed specifically to support associated electrical and electronic components

SEE: Figure 8.

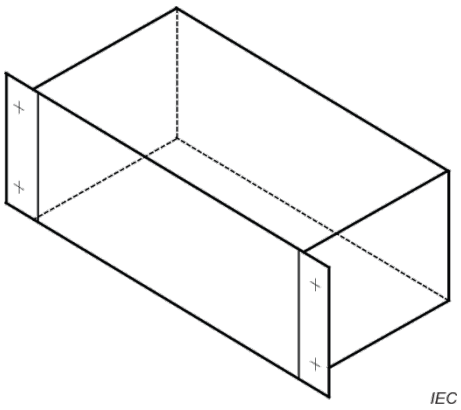

Figure 8 – Chassis

3.20
plug-in unit
unit which plugs into a subrack and is supported by guides

Note 1 to entry: These units can be of various types, ranging from a printed board with components inserted to a frame or box-type unit designed with a plug-in connection.

Documents
Document Sharing Hub
Full document details: IEC 60917-1-2019

SEE: Figure 9.

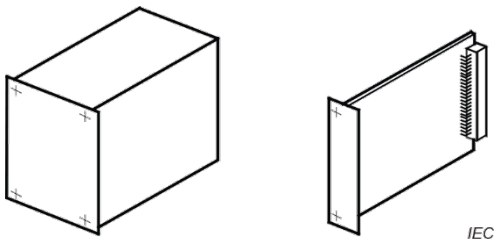

Figure 9 – Plug-in unit

3.21
console
table-mounted or floor-standing enclosure having horizontal, vertical and/or sloping faces to accommodate control, information and monitoring equipment

SEE: Figure 10.

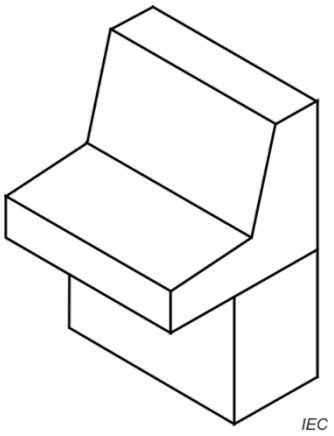

Figure 10 – Console

3.22
plug-in unit guide
device to guide, locate and support plug-in units and printed boards, with components inserted, in subracks

SEE: Figure 11.

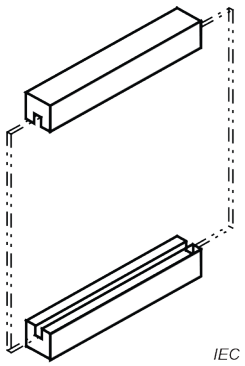

Figure 11 – Plug-in unit guide

Documents
Document Sharing Hub
Full document details: IEC 60917-1-2019

3.23
slides
angle-bars on which subracks and chassis may slide and be supported within a rack, cabinet or case

SEE: Figure 12.

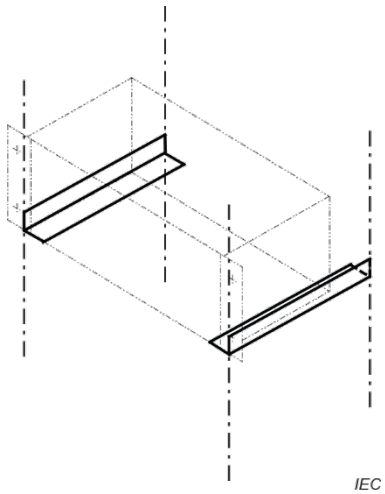

Figure 12 – Slides

3.24
telescopic slides
devices to support withdrawable subracks and chassis in the extended position

SEE: Figure 13.

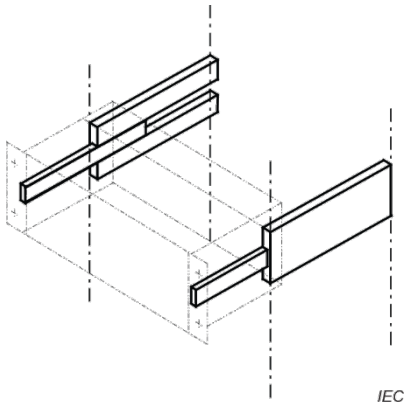

Figure 13 – Telescopic slides

3.25
mounting frame
frame design of profiles for the mounting of electronic /electrical devices. Fixed or movable location within cabinets

Documents
Document Sharing Hub
Full document details: IEC 60917-1-2019