IEC 60917-2-3

Edition 1.0 2006-05

INTERNATIONAL STANDARD

NORME INTERNATIONALE

colour inside

Modular order for the development of mechanical structures for electronic equipment practices – Part 2-3: Sectional specification – Interface co-ordination dimensions for the 25 mm equipment practice – Extended detail specification – Dimensions for subracks, chassis, backplanes, front panels and plug-in units

Ordre modulaire pour le développement des structures mécaniques pour les infrastructures électroniques – Partie 2-3: Spécification intermédiaire – Dimensions de coordination pour les interfaces des infrastructures au pas de 25 mm – Spécification particulière étendue – Dimensions pour bacs, châssis, fonds de paniers, faces avant et unités enfichables

IEC 60917-2-3:2006

AVA Documents
Document Sharing Hub

Full document details: IEC 60917-2-3 2006

THIS PUBLICATION IS COPYRIGHT PROTECTED

Copyright © 2006 IEC, Geneva, Switzerland

All rights reserved. Unless otherwise specified, no part of this publication may be reproduced or utilized in any form or by any means, electronic or mechanical, including photocopying and microfilm, without permission in writing from either IEC or IEC's member National Committee in the country of the requester.
If you have any questions about IEC copyright or have an enquiry about obtaining additional rights to this publication, please contact the address below or your local IEC member National Committee for further information.

Droits de reproduction réservés. Sauf indication contraire, aucune partie de cette publication ne peut être reproduite ni utilisée sous quelque forme que ce soit et par aucun procédé, électronique ou mécanique, y compris la photocopie et les microfilms, sans l'accord écrit de la CEI ou du Comité national de la CEI du pays du demandeur.
Si vous avez des questions sur le copyright de la CEI ou si vous désirez obtenir des droits supplémentaires sur cette publication, utilisez les coordonnées ci-après ou contactez le Comité national de la CEI de votre pays de résidence.

IEC Central Office
3, rue de Varembé
CH-1211 Geneva 20
Switzerland

Tel.: +41 22 919 02 11
Fax: +41 22 919 03 00
info@iec.ch
www.iec.ch

About the IEC

The International Electrotechnical Commission (IEC) is the leading global organization that prepares and publishes International Standards for all electrical, electronic and related technologies.

About IEC publications

The technical content of IEC publications is kept under constant review by the IEC. Please make sure that you have the latest edition, a corrigenda or an amendment might have been published.

Useful links:

IEC publications search - www.iec.ch/searchpub

The advanced search enables you to find IEC publications by a variety of criteria (reference number, text, technical committee,…).
It also gives information on projects, replaced and withdrawn publications.

IEC Just Published - webstore.iec.ch/justpublished

Stay up to date on all new IEC publications. Just Published details all new publications released. Available on-line and also once a month by email.

Electropedia - www.electropedia.org

The world's leading online dictionary of electronic and electrical terms containing more than 30 000 terms and definitions in English and French, with equivalent terms in additional languages. Also known as the International Electrotechnical Vocabulary (IEV) on-line.

Customer Service Centre - webstore.iec.ch/csc

If you wish to give us your feedback on this publication or need further assistance, please contact the Customer Service Centre: csc@iec.ch.

A propos de la CEI

La Commission Electrotechnique Internationale (CEI) est la première organisation mondiale qui élabore et publie des Normes internationales pour tout ce qui a trait à l'électricité, à l'électronique et aux technologies apparentées.

A propos des publications CEI

Le contenu technique des publications de la CEI est constamment revu. Veuillez vous assurer que vous possédez l'édition la plus récente, un corrigendum ou amendement peut avoir été publié.

Liens utiles:

Recherche de publications CEI - www.iec.ch/searchpub

La recherche avancée vous permet de trouver des publications CEI en utilisant différents critères (numéro de référence, texte, comité d'études,…).
Elle donne aussi des informations sur les projets et les publications remplacées ou retirées.

Just Published CEI - webstore.iec.ch/justpublished

Restez informé sur les nouvelles publications de la CEI. Just Published détaille les nouvelles publications parues. Disponible en ligne et aussi une fois par mois par email.

Electropedia - www.electropedia.org

Le premier dictionnaire en ligne au monde de termes électroniques et électriques. Il contient plus de 30 000 termes et définitions en anglais et en français, ainsi que les termes équivalents dans les langues additionnelles. Egalement appelé Vocabulaire Electrotechnique International (VEI) en ligne.

Service Clients - webstore.iec.ch/csc

Si vous désirez nous donner des commentaires sur cette publication ou si vous avez des questions contactez-nous: csc@iec.ch.

Documents
Document Sharing Hub

Full document details: IEC 60917-2-3 2006

IEC 60917-2-3

Edition 1.0 2006-05

INTERNATIONAL STANDARD

NORME INTERNATIONALE

colour inside

Modular order for the development of mechanical structures for electronic equipment practices – Part 2-3: Sectional specification – Interface co-ordination dimensions for the 25 mm equipment practice – Extended detail specification – Dimensions for subracks, chassis, backplanes, front panels and plug-in units

Ordre modulaire pour le développement des structures mécaniques pour les infrastructures électroniques – Partie 2-3: Spécification intermédiaire – Dimensions de coordination pour les interfaces des infrastructures au pas de 25 mm – Spécification particulière étendue – Dimensions pour bacs, châssis, fonds de paniers, faces avant et unités enfichables

INTERNATIONAL
ELECTROTECHNICAL
COMMISSION

COMMISSION
ELECTROTECHNIQUE
INTERNATIONALE

PRICE CODE
CODE PRIX V

ICS 31.240

ISBN 978-2-83220-885-4

Warning! Make sure that you obtained this publication from an authorized distributor.
Attention! Veuillez vous assurer que vous avez obtenu cette publication via un distributeur agréé.

AVA Documents
Document Sharing Hub

® Registered trademark of the International Electrotechnical Commission
Marque déposée de la Commission Electrotechnique Internationale

Full document details: IEC 60917-2-3 2006

CONTENTS

FOREWORD 4
INTRODUCTION 6

1 Scope and object 8
2 Normative references 8
3 Terms and definitions 9
4 Arrangement overview 9
5 Subrack dimensions for injector/extractor handle of plug-in units 10
5.1 Subrack interface dimensions 10
6 Dimensions of injector/extractor handle for plug-in units 12
6.1 Injector/extractor handle interface dimensions 12
6.2 Handle-locking function 14
7 Subrack and plug-in units with electromagnetic shielding provision 14
7.1 Subrack interface dimensions for electromagnetic shielding provision 14
7.2 Front panel/plug-in unit interface dimensions 17
8 Key/coding system for subrack and plug-in units 18
8.1 General 18
8.2 Subrack interface dimensions – Key/coding system on the plug-in unit guides 19
8.3 Key dimensions – Key/coding system on the plug-in unit guides 20
8.4 Programming of key – Key/coding system on the plug-in guides 22
8.5 Keying chamber inspection dimensions 22
9 Alignment pin and/or electrical contact for front panels and plug-in units 23
9.1 General 23
9.2 Alignment pins and receptacle plates on the subrack horizontal members 24
9.3 Alignment and/or electrical contact pins and receptacles on the subrack plug-in unit guides 25
10 Electrostatic discharge provision for plug-in units and subracks 27
10.1 General 27
10.2 ESD contact interface dimensions 28
10.3 ESD strip interface dimensions 28
10.4 Dimensions of subracks and plug-in units based on IEC 60917-2-2 30
11 Subrack dimensions for rear-mounted plug-in units 32
Annex A (informative) Subrack, plug-in unit and backplane dimensions for using metric connectors 33

Figure 1 – Typical example of large subracks in a wide cabinet, equipped mass volume of copper/optical cables installation 7
Figure 2 – Subject for development of extended connector application packaging and key elements of interconnection between functional plug-in modules via backplane in the future packaging system 7
Figure 3 – Arrangement overview 9
Figure 4 – Subrack interface dimensions, injector/extractor handles for plug-in units 11
Figure 5 – Detail X and detail Y, subrack interface dimensions, injection/extraction handles for plug-in units 12
Figure 6 – Plug-in units interface dimensions, injection/extraction handle for plug-in units 13

AVA Documents
Document Sharing Hub
Full document details: IEC 60917-2-3 2006

Figure 7 – Detail X and detail Y, plug-in interface dimensions, injector/extractor handles for plug-in units 14
Figure 8 – Subrack interface dimensions, electromagnetic shielding provisions 15
Figure 9 – Detail X and detail Y, subrack interface dimensions, electromagnetic shielding provisions 16
Figure 10 – Front panel/plug-in unit interface dimensions, electromagnetic shielding provisions 17
Figure 11 – Arrangement of key/coding system for plug-in units 18
Figure 12 – Subrack interface dimensions – Key/coding system on the plug-in unit guides 19
Figure 13 – Plug-in unit interface dimensions – Key/coding system on the plug-in unit guides 20
Figure 14 – Key dimensions and rotated key positions – Key/coding system on the plug-in unit guides 21
Figure 15 – Programming of keys 22
Figure 16 – Arrangement of alignment pin system for subracks and plug-in units 23
Figure 17 – Subrack interface dimensions, alignment pins and receptacle plates on the horizontal members 24
Figure 18 – Plug-in unit interface dimensions, alignment pins and receptacle plates on the horizontal members 25
Figure 19 – Subrack interface dimensions, alignment and/or electrical contact pin receptacles on the plug-in unit guides 26
Figure 20 – Plug-in unit interface dimensions, alignment and/or electrical contact pin receptacles on the plug-in unit guides 27
Figure 21 – Subrack interface dimensions, ESD contacts on the plug-in guides 28
Figure 22 – Plug-in unit interface dimensions, ESD strips on the plug-in boards 29
Figure 23 – Subrack dimensions for rear mounted plug-in units 32
Figure A.1 – Subrack, plug-in unit and backplane dimensions for using 2,5 mm metric connectors in accordance with IEC 61076-4-100 33
Figure A.2 – Subrack, plug-in unit and backplane dimensions for using 2 mm metric connectors in accordance with IEC 61076-4-101 34
Figure A.3 – Subrack, plug-in unit and backplane dimensions for using 2 mm metric connectors in accordance with IEC 61076-4-104 35

Table 1 – Inspection dimensions of subrack and plug-in unit keying chambers 22
Table 2 – Dimensions of subracks and plug-in units based on IEC 60917-2-2 30
Table 3 – Dimensions of subracks and boards for rear-mounted plug-in units 32

Documents
Document Sharing Hub
Full document details: IEC 60917-2-3 2006

INTERNATIONAL ELECTROTECHNICAL COMMISION

MODULAR ORDER FOR THE DEVELOPMENT OF MECHANICAL STRUCTURES FOR ELECTRONIC EQUIPMENT PRACTICES –

Part 2-3: Sectional specification – Interface co-ordination dimensions for the 25 mm equipment practice – Extended detail specification – Dimensions for subracks, chassis, backplanes, front panels and plug-in units

FOREWORD

1) The International Electrotechnical Commission (IEC) is a worldwide organization for standardization comprising all national electrotechnical committees (IEC National Committees). The object of IEC is to promote international co-operation on all questions concerning standardization in the electrical and electronic fields. To this end and in addition to other activities, IEC publishes International Standards, Technical Specifications, Technical Reports, Publicly Available Specifications (PAS) and Guides (hereafter referred to as "IEC Publication(s)"). Their preparation is entrusted to technical committees; any IEC National Committee interested in the subject dealt with may participate in this preparatory work. International, governmental and non-governmental organizations liaising with the IEC also participate in this preparation. IEC collaborates closely with the International Organization for Standardization (ISO) in accordance with conditions determined by agreement between the two organizations.
2) The formal decisions or agreements of IEC on technical matters express, as nearly as possible, an international consensus of opinion on the relevant subjects since each technical committee has representation from all interested IEC National Committees.
3) IEC Publications have the form of recommendations for international use and are accepted by IEC National Committees in that sense. While all reasonable efforts are made to ensure that the technical content of IEC Publications is accurate, IEC cannot be held responsible for the way in which they are used or for any misinterpretation by any end user.
4) In order to promote international uniformity, IEC National Committees undertake to apply IEC Publications transparently to the maximum extent possible in their national and regional publications. Any divergence between any IEC Publication and the corresponding national or regional publication shall be clearly indicated in the latter.
5) IEC provides no marking procedure to indicate its approval and cannot be rendered responsible for any equipment declared to be in conformity with an IEC Publication.
6) All users should ensure that they have the latest edition of this publication.
7) No liability shall attach to IEC or its directors, employees, servants or agents including individual experts and members of its technical committees and IEC National Committees for any personal injury, property damage or other damage of any nature whatsoever, whether direct or indirect, or for costs (including legal fees) and expenses arising out of the publication, use of, or reliance upon, this IEC Publication or any other IEC Publications.
8) Attention is drawn to the Normative references cited in this publication. Use of the referenced publications is indispensable for the correct application of this publication.
9) Attention is drawn to the possibility that some of the elements of this IEC Publication may be the subject of patent rights. IEC shall not be held responsible for identifying any or all such patent rights.

International Standard IEC 60917-2-3 has been prepared by subcommittee 48D: Mechanical structures for electronic equipment, of IEC technical committee 48: Electromechanical components and mechanical structures for electronic equipment.

This bilingual version (2013-06) corresponds to the monolingual English version, published in 2006-05.

AVA Documents
Document Sharing Hub

Full document details: IEC 60917-2-3 2006

The text of this standard is based on following documents:

FDIS	Report on voting
48D/338/FDIS	48D/342/RVD

Full information on the voting for the approval of this standard can be found in the report on voting indicated in the above table.

The French version of this standard has not been voted upon.

IEC 60917 consists of the following parts, under the general title *Modular order for the development of mechanical structures for electronic equipment practices:*

Part 1: Generic standard

Part 2: Sectional specification – Interface co-ordination dimensions for the 25 mm equipment practice

Part 2-1: Sectional specification – Interface co-ordination dimensions for the 25 mm equipment practice – Detail specification – Dimensions for cabinets and racks

Part 2-2: Sectional specification – Interface co-ordination dimensions for the 25 mm equipment practice – Detail specification – Dimensions for subracks, chassis, backplanes, front panels and plug-in units

Part 2-3: Sectional specification – Interface co-ordination dimensions for the 25 mm equipment practice – Extended detail specification – Dimensions for subracks, chassis, backplanes, front panels and plug-in units

The committee has decided that the contents of this publication will remain unchanged until the maintenance result date indicated on the IEC web site under "http://webstore.iec.ch" in the data related to the specific publication. At this date, the publication will be

- reconfirmed;
- withdrawn;
- replaced by a revised edition, or
- amended.

IMPORTANT – The 'colour inside' logo on the cover page of this publication indicates that it contains colours which are considered to be useful for the correct understanding of its contents. Users should therefore print this document using a colour printer.

Documents
Document Sharing Hub

Full document details: IEC 60917-2-3 2006

INTRODUCTION

The dimensions in the detail specification for the 25 mm equipment practice standard are laid down in the IEC 60917-2 series.

Significant progress in electronics circuitry, with increasing signal speed and the demand for high availability of the electronics systems, has made an impact on the structural parts of the equipment, as specified in IEC 60917-2-2.

a) Considerations on the general tendency of the enclosure system

At the moment, the general tendencies of the enclosure system for telecom/IT equipment application and associated application are considered to be:

– the changing form of conventional centralized networking for telecommunication to flexible distributed networking to realize ubiquitous communication and computing environment by broad-band/IP and photonics-networking-based technology;

– flexible configuration of networking equipment from the open market is requested;

– a scalable and high-performance packaging/enclosure system is requested for new networking equipment;

– in addition, such a packaging/enclosure system will be widely applied for general electronic equipment, because IP networking technology is becoming one of the common interfaces for all of industrial systems.

Consequently, the following general requirements for the new enclosure system arise.

– Standard-based but various sized networking/IT equipment from the open market should be installed in one cabinet (see figure 1).

– The mass volume of copper/optical cables from the equipment should be managed in the cabinet.

– Networking/IT cabinets will be increasingly sited at general offices in enterprise buildings rather than at traditional technical rooms in telecom-central offices.

In order to meet these market needs, the implementation of additional specified dimensions for extended features based on IEC 60917-2-2 became necessary.

b) Subject for development of extended connector application packaging based on IEC 60917 series

The existing IEC 60917 series, which is structured on the modular concept of 25 mm, is based on the IEC standardized metric connector. However, the system packaging uses to many non-standardized enhanced connectors, which are necessary to realize the system functions and level of performance (see Figure 2).

NOTE IEC Subcommittee 48D, Working Group 2, reviews the trends in system packaging, in which key elements are electrical/optical signal interfaces and connectors, as well as the general tendency of the new enclosure system. From these aspects, the IEC Subcommittee 48D, Working Group 2 has recently developed IEC 60917-2-3 which will be applicable to system packaging for high-speed and other system applications in the near future.

Documents
Document Sharing Hub

Full document details: IEC 60917-2-3 2006

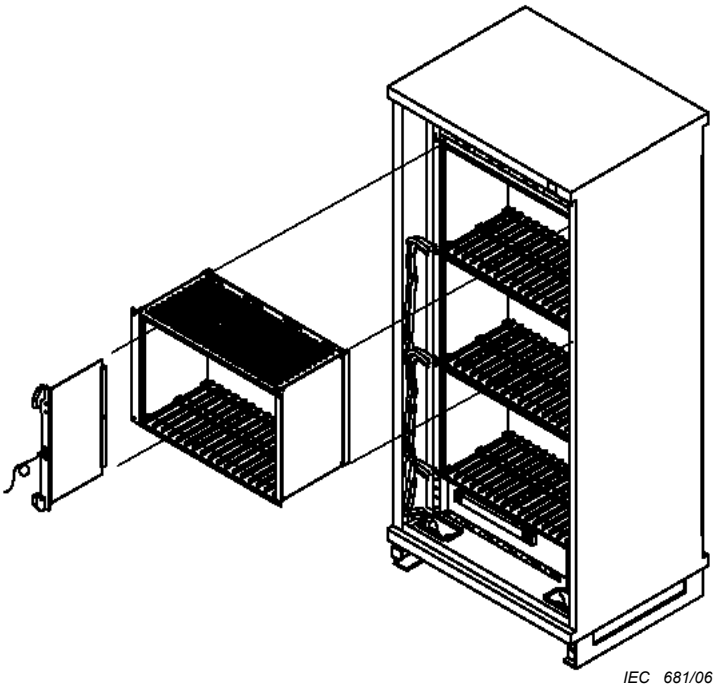

IEC 681/06

Figure 1 – Typical example of large subracks in a wide cabinet, equipped mass volume of copper/optical cables installation

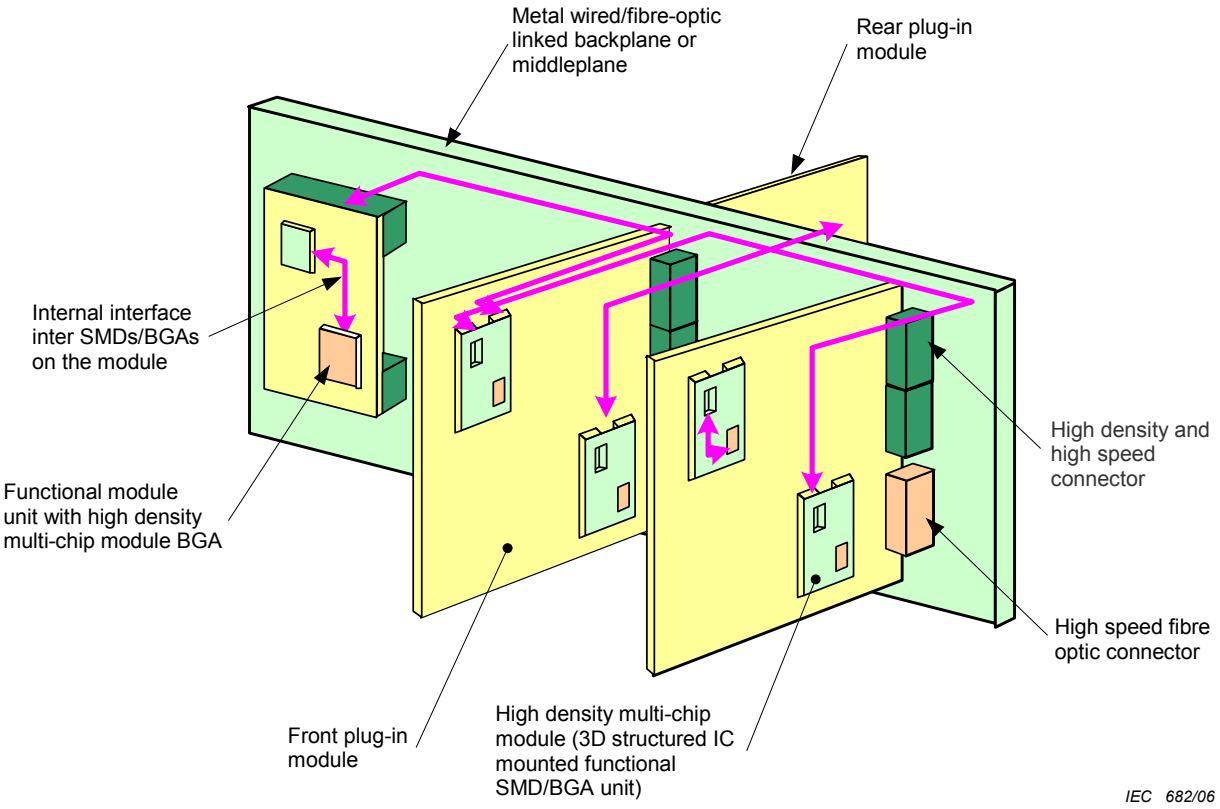

Key

SMD: Surface Mount Device.

BGA: Ball Grid Array.

Figure 2 – Subject for development of extended connector application packaging and key elements of interconnection between functional plug-in modules via backplane in the future packaging system

AVA Documents
Document Sharing Hub

Full document details: IEC 60917-2-3 2006

MODULAR ORDER FOR THE DEVELOPMENT OF MECHANICAL STRUCTURES FOR ELECTRONIC EQUIPMENT PRACTICES –

Part 2-3: Sectional specification – Interface co-ordination dimensions for the 25 mm equipment practice – Extended detail specification – Dimensions for subracks, chassis, backplanes, front panels and plug-in units

1 Scope and object

This part of IEC 60917 provides additional dimensions for a modular range of subracks and associated plug-in units based on IEC 60917-2-2.

A typical subrack consists of a frame design with mounting dimensions for installation into racks or cabinets in accordance with IEC 60917-2-1. The aperture dimensions of a subrack are specified in order to meet the mounting dimensions of front plug-in units.

This part of IEC 60917 comprises

– additional dimensions for subracks and subrack associated plug-in units with injector/ extractor handle;
– dimensions for basic electromagnetic shielding provisions;
– dimensions of the key/coding system for subrack and plug-in units;
– dimensions of the alignment pin for front panel and plug-in unit;
– dimensions of electrostatic discharge provisions;
– dimensions of rear-mounted plug-in units.

Connector-related dimensions are given in Annex A.

In order to ensure the compatibility of plug-in units into the subrack, inspection dimensions and connector-dependent dimensions are defined.

NOTE The drawings used in this part of IEC 60917 are not intended to indicate product design, only the specific dimensions that are used.

2 Normative references

The following referenced documents are indispensable for the application of this document. For dated references, only the edition cited applies. For undated references, the latest edition of the referenced document (including any amendments) applies.

IEC 60917-1:1998, *Modular order for the development of mechanical structures for electronic equipment practices – Part 1: Generic standard*

IEC 60917-2-1:1993, *Modular order for the development of mechanical structures for electronic equipment practice – Part 2: Sectional specification – Interface co-ordination dimensions for the 25 mm equipment practice – Section 1: Detail specification – Dimensions for cabinets and racks*

IEC 60917-2-2:1994, *Modular order for the development of mechanical structures for electronic equipment practice – Part 2: Sectional specification – Interface co-ordination dimensions for the 25 mm equipment practice – Section 2: Detail specification – Dimensions for subracks, chassis, backplanes, front panels and plug-in units*

Documents
Document Sharing Hub
Full document details: IEC 60917-2-3 2006

IEC 61076-4-100:2001, *Connectors for electronic equipment – Part 4-100: Printed board connectors with assessed quality – Detail specification for two-part connector modules having a grid of 2,5 mm for printed boards and backplanes*

IEC 61076-4-101:2001, *Connectors for electronic equipment – Part 4-101: Printed board connectors with assessed quality – Detail specification for two-part connector modules, having a basic grid of 2,0 mm for printed boards and backplane in accordance with IEC 60917*

IEC 61076-4-104:1999, *Connectors for use in d.c., low frequency analogue and digital high speed data application – Part 4-104: Printed board connectors with assessed quality – Detail specification for two-part modular connectors, basic grid of 2,0 mm, with terminations on a multiple grid of 0,5 mm*

3 Terms and definitions

For the purposes of this document, the terms and definitions given in IEC 60917-1 apply.

4 Arrangement overview

Typical subrack with front and rear plug-in units (see Figure 3).

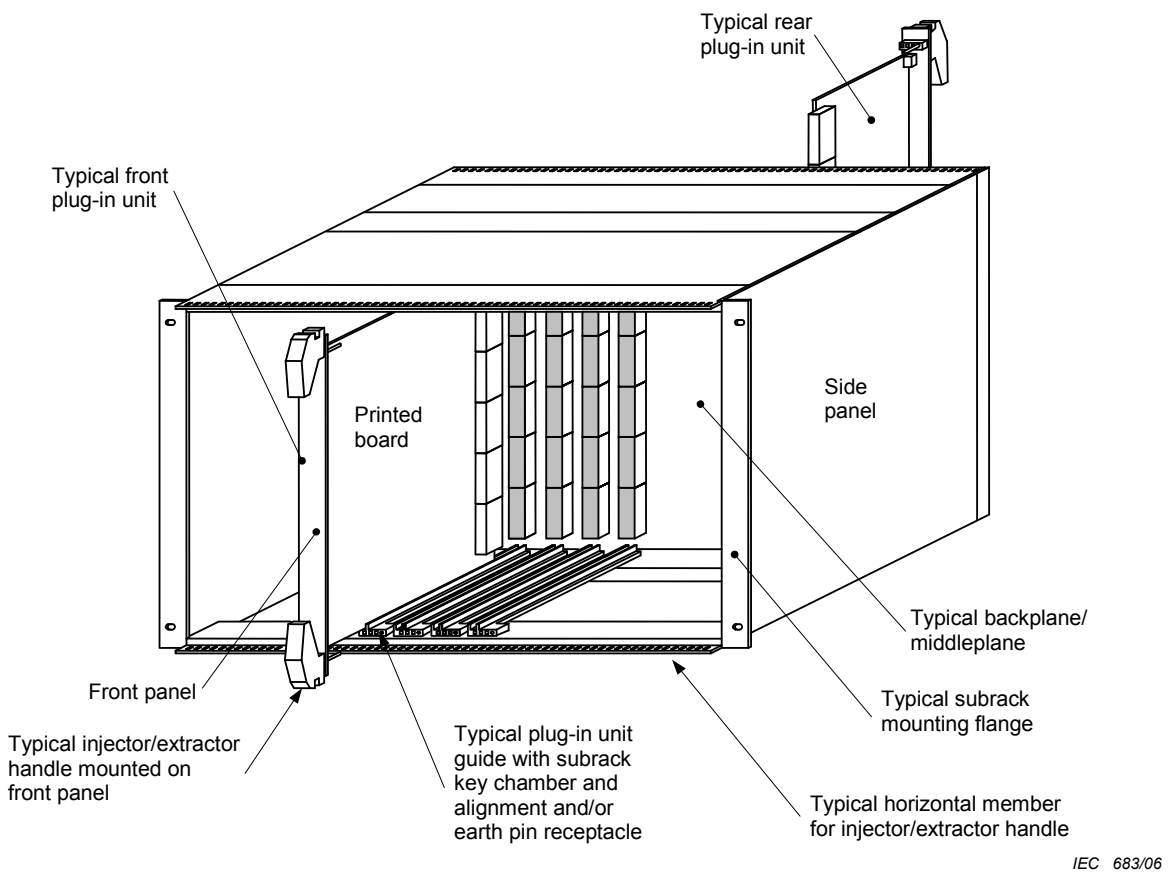

Figure 3 – Arrangement overview

Documents
Document Sharing Hub
Full document details: IEC 60917-2-3 2006

5 Subrack dimensions for injector/extractor handle of plug-in units

5.1 Subrack interface dimensions

The following subrack interface dimensions shall be used only for applications with enhanced injector/extractor handles that are defined in Clause 6 of this part of IEC 60917.

The basic dimensions of the subrack are in accordance with IEC 60917-2-2. Only the additional dimensions of the subrack and plug-in units with the injector/extractor handles are specified in this clause (see Figures 4 and 5).

Documents
Document Sharing Hub

Full document details: IEC 60917-2-3 2006

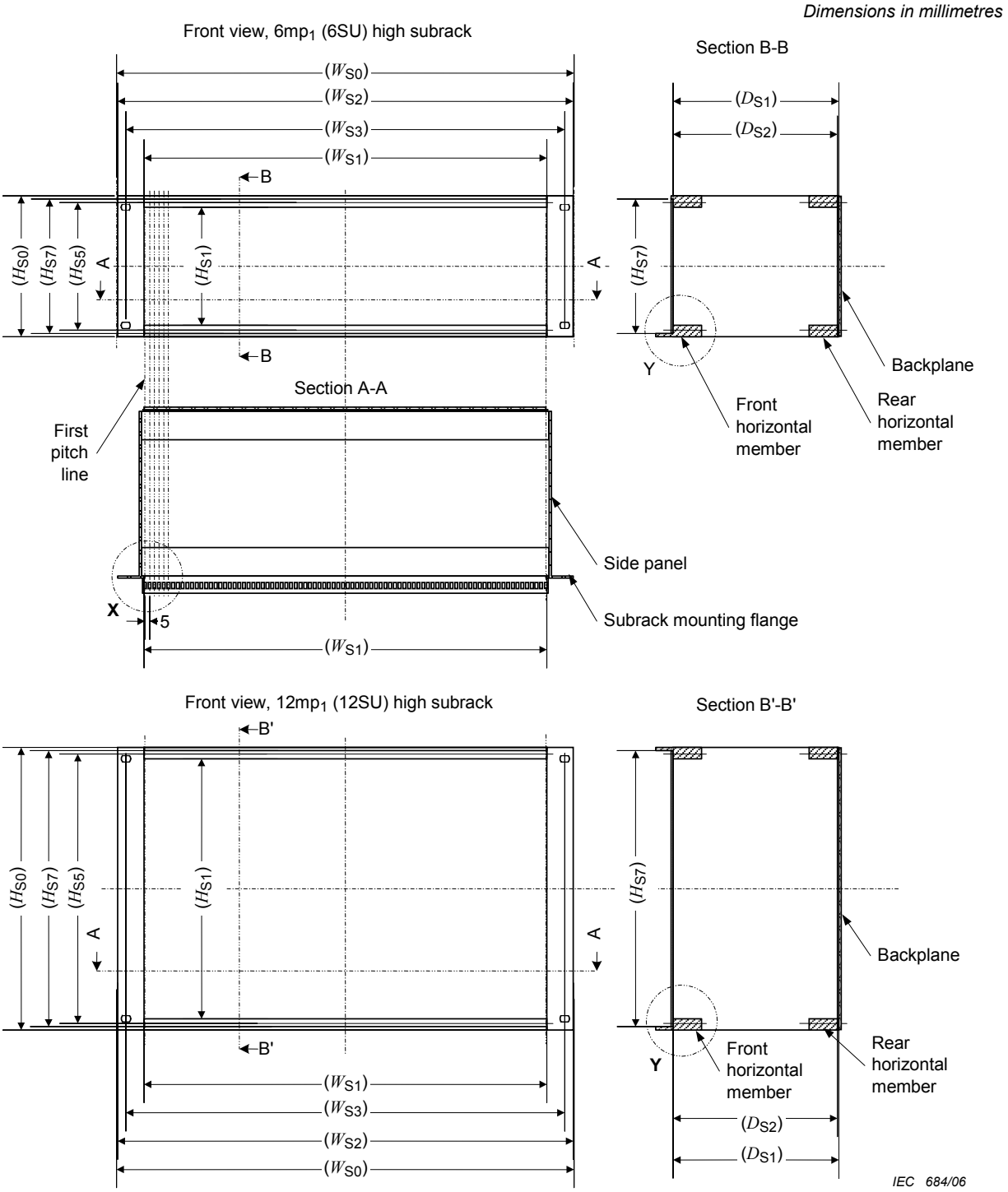

NOTE Dimensions in parentheses are in accordance with IEC 60917-2-2 (see Table 2).

Figure 4 – Subrack interface dimensions, injector/extractor handles for plug-in units

Documents
Document Sharing Hub
Full document details: IEC 60917-2-3 2006

Dimensions in millimetres

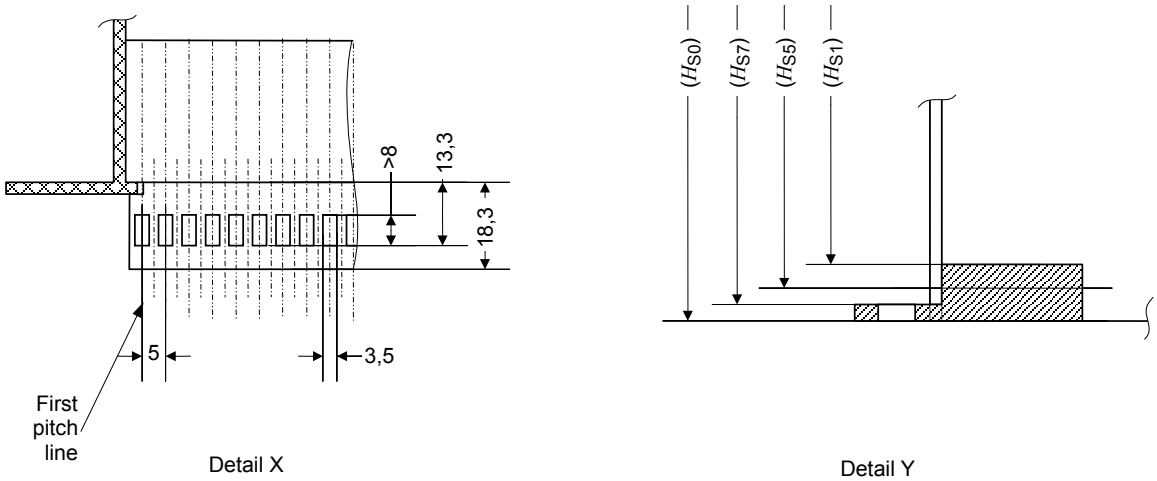

IEC 685/06

NOTE Dimensions in parentheses are in accordance with IEC 60917-2-2 (see Table 2).

Figure 5 – Detail X and detail Y, subrack interface dimensions, injection/extraction handles for plug-in units

6 Dimensions of injector/extractor handle for plug-in units

6.1 Injector/extractor handle interface dimensions

The following handle interface dimensions shall be used only for applications with subracks that have the interface dimensions for injector/extractor handles and that are defined in Clause 5 of this part of IEC 60917.

The basic dimensions of the plug-in units are in accordance with IEC 60917-2-2. Only the additional dimensions of the plug-in units with the injector/extractor handles are specified in this clause (see Figures 6 and 7).

The width of the injector/extractor handles can have any dimension less than Ws4, front panel width. See Table 2b.

The injector/extractor handles may exceed the horizontal pitch lines defined in 60917-2-2 to obtain effective injection/extraction function. The handle in closed position shall not exceed the subrack reference plane. In operation of insertion and extraction, the handle may exceed by maximum 0,5 mp 1 (0,5 SU) to the subrack (height) reference plane on both sides, top and bottom.

NOTE It is recommended that, in respect to the connector insertion/withdrawal force, the handle should be of such a design, that the force to operate the handle should not exceed 100 N.

Documents
Document Sharing Hub
Full document details: IEC 60917-2-3 2006

Dimensions in millimetres

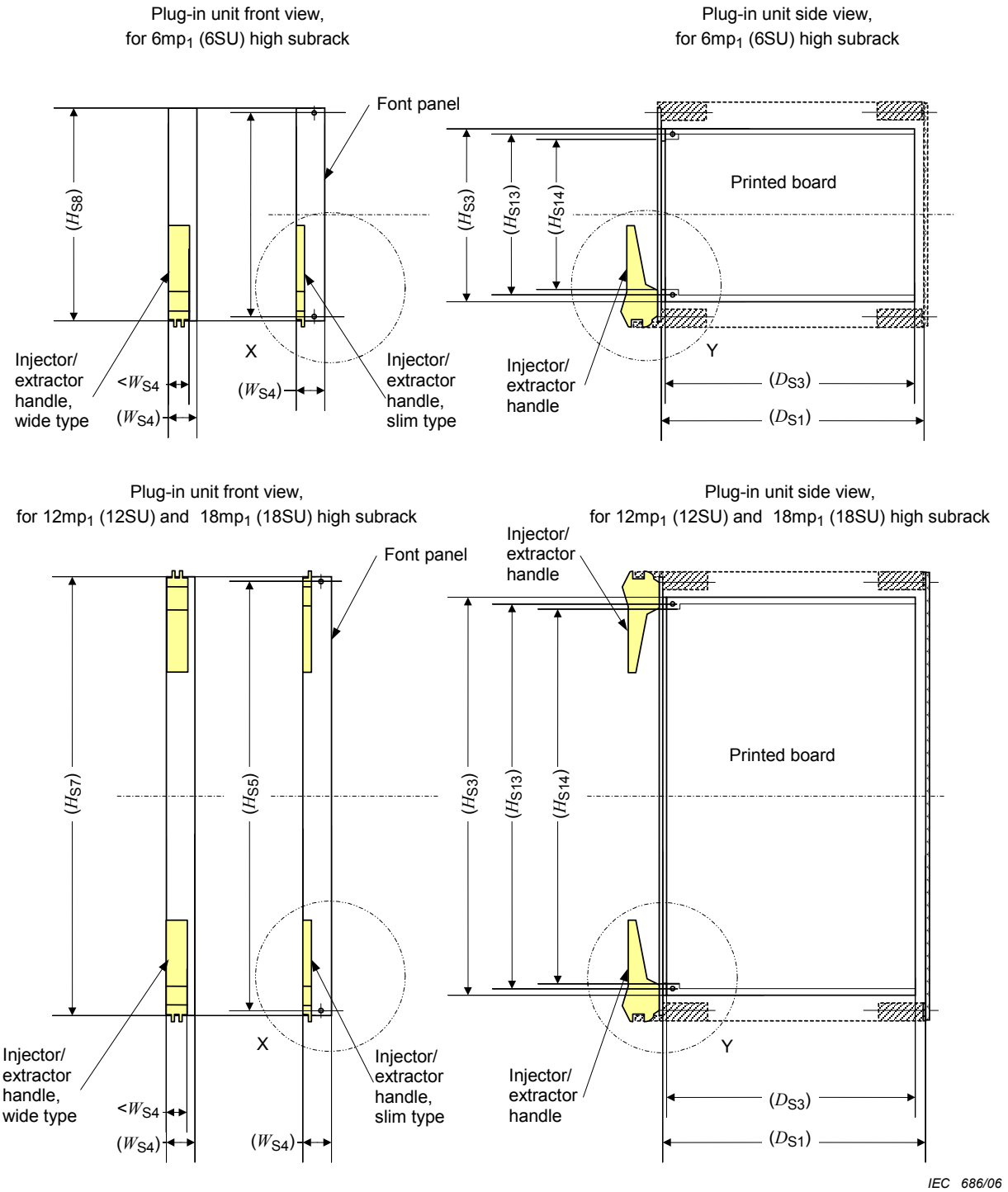

NOTE Dimensions in parentheses are in accordance with IEC 60917-2-2 (see Table 2).

Figure 6 – Plug-in units interface dimensions, injection/extraction handle for plug-in units

Documents
Document Sharing Hub
Full document details: IEC 60917-2-3 2006

Dimensions in millimetres

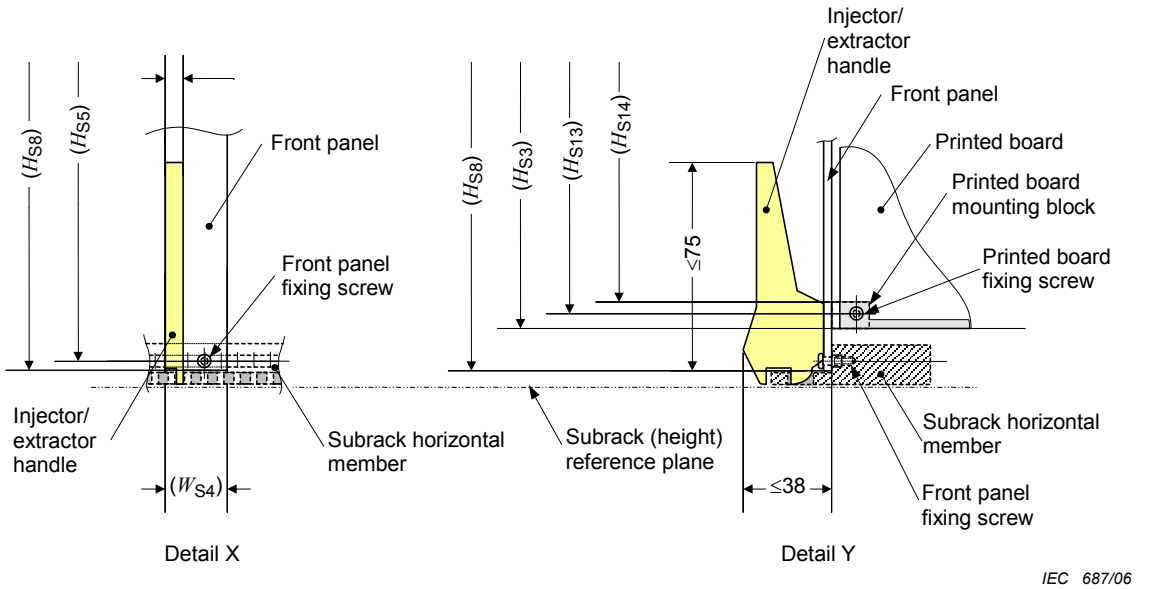

NOTE Dimensions in parentheses are in accordance with IEC 60917-2-2 (see Table 2).

Figure 7 – Detail X and detail Y, plug-in interface dimensions, injector/extractor handles for plug-in units

6.2 Handle-locking function

The injector/extractor handle may have a locking function instead of a plug-in unit fixing screw.

7 Subrack and plug-in units with electromagnetic shielding provision

7.1 Subrack interface dimensions for electromagnetic shielding provision

The following subrack interface dimensions shall be used only for applications with plug-in units that have electromagnetic shielding provisions as defined in 7.2 of this part of IEC 60917.

The basic dimensions of the subrack are in accordance with IEC 60917-2-2 for subracks, front panels and plug-in units. Only the additional dimensions of the subrack with the electromagnetic shielding provision are specified in this clause (see Figures 8 and 9).

The width of the injector/extractor handle can have any dimension less than W_{s4}, front panel width (see Table 2).

The injector/extractor handles may exceed the horizontal pitch lines defined in IEC 60917-2-2 to obtain effective injection/extraction function.

The handle in closed position shall not exceed the subrack reference plane. In the operations of insertion and extraction, the handle may exceed the subrack (height) reference plane on both sides, top and bottom by a maximum of 0,5 mp_1 (0,5 SU).

Documents
Document Sharing Hub
Full document details: IEC 60917-2-3 2006

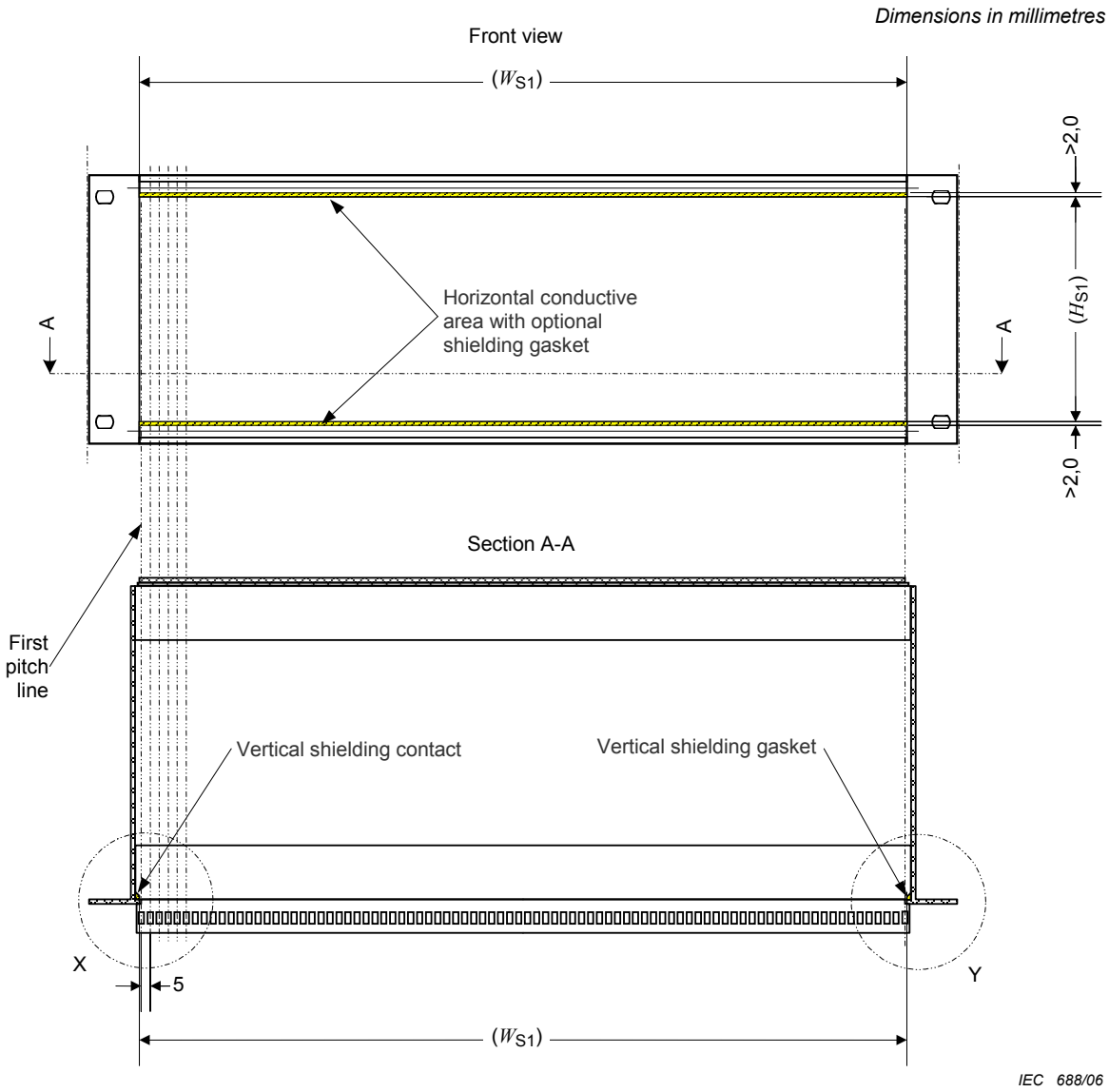

NOTE Dimensions in parenthesis are in accordance with IEC 60917-2-2 (see Table 2).

Figure 8 – Subrack interface dimensions, electromagnetic shielding provisions

Documents
Document Sharing Hub
Full document details: IEC 60917-2-3 2006

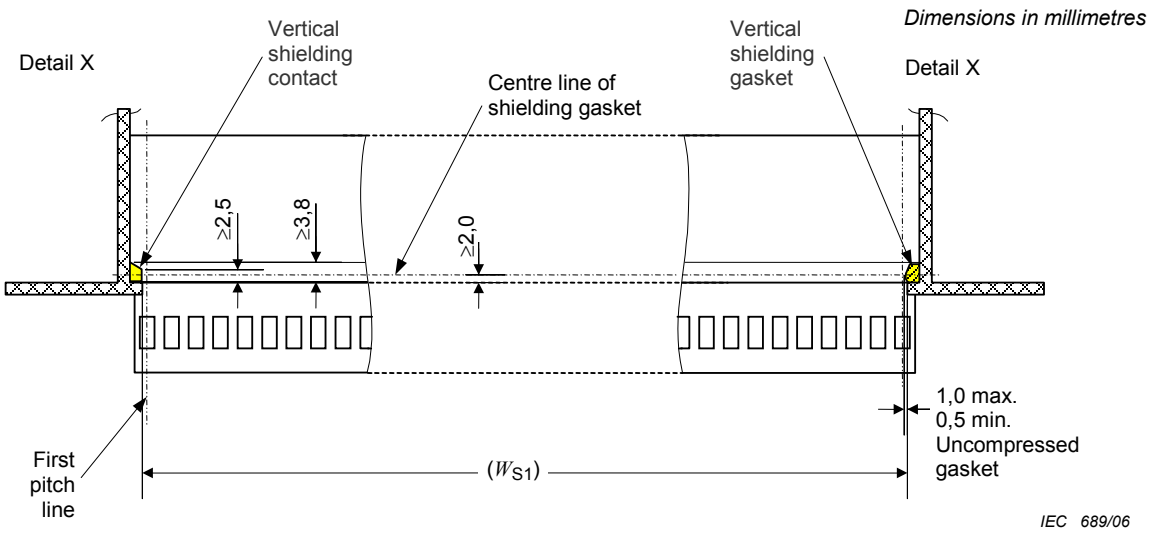

NOTE 1 Dimensions in parentheses are in accordance with IEC 60917-2-2 (see Table 2).

NOTE 2 It is recommended that shielding gaskets and shielding contact surfaces of low electrical resistance and long-lasting corrosion protection should be used.

Figure 9 – Detail X and detail Y, subrack interface dimensions, electromagnetic shielding provisions

Documents
Document Sharing Hub
Full document details: IEC 60917-2-3 2006

7.2 Front panel/plug-in unit interface dimensions

The following front panel/plug-in units interface dimensions shall be used only for applications with subracks that have electromagnetic shielding provisions, as defined in 7.1 of this part of IEC 60917.

The basic dimensions of the front panel/plug-in unit are in accordance with IEC 60917-2-2 for subracks, front panels and plug-in units. Only the additional dimensions of the front panel/plug-in unit with the electromagnetic shielding provision are specified in this clause (see Figure 10).

Dimensions in millimetres

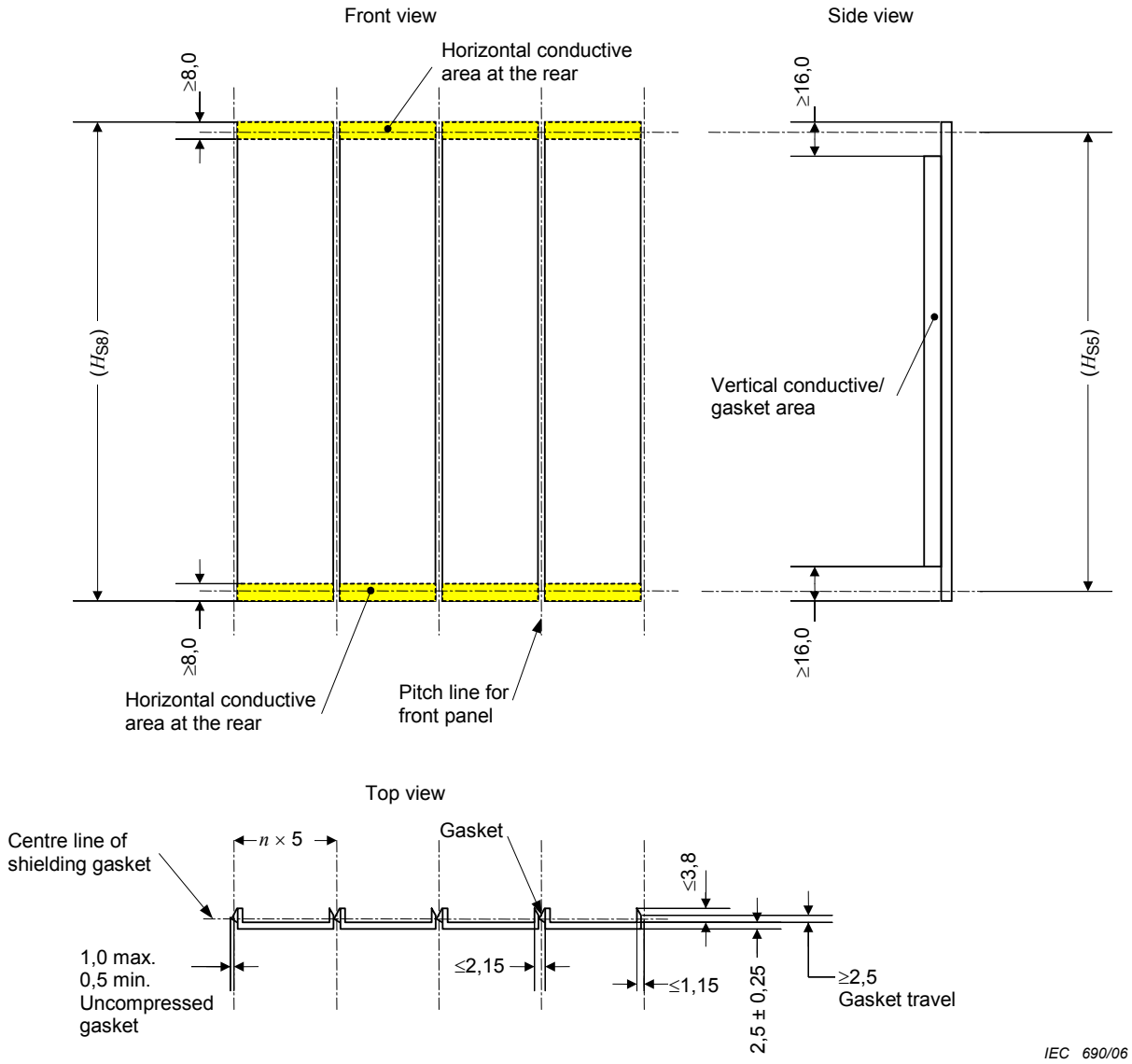

NOTE Dimensions in parentheses are in accordance with IEC 60917-2-2 (see Table 2).

Figure 10 – Front panel/plug-in unit interface dimensions, electromagnetic shielding provisions

Documents
Document Sharing Hub
Full document details: IEC 60917-2-3 2006

8 Key/coding system for subrack and plug-in units

8.1 General

The subrack and plug-in units may have a key/coding system on the plug-in unit and the subrack plug-in unit guide. This part of IEC 60917 details a keying system that is user-programmable from the front and/or the rear of a subrack and on the rear face of a plug-in unit. The programmable key can be set, removed or changed by the users (see Figures 11, 12 and 13).

A subrack assembled with guide rails in accordance with IEC 60917-2-2 and Clause 11 of this part of IEC 60917 (without a keying feature) will accept plug-in units with front panels in accordance with this clause (with keys removed).

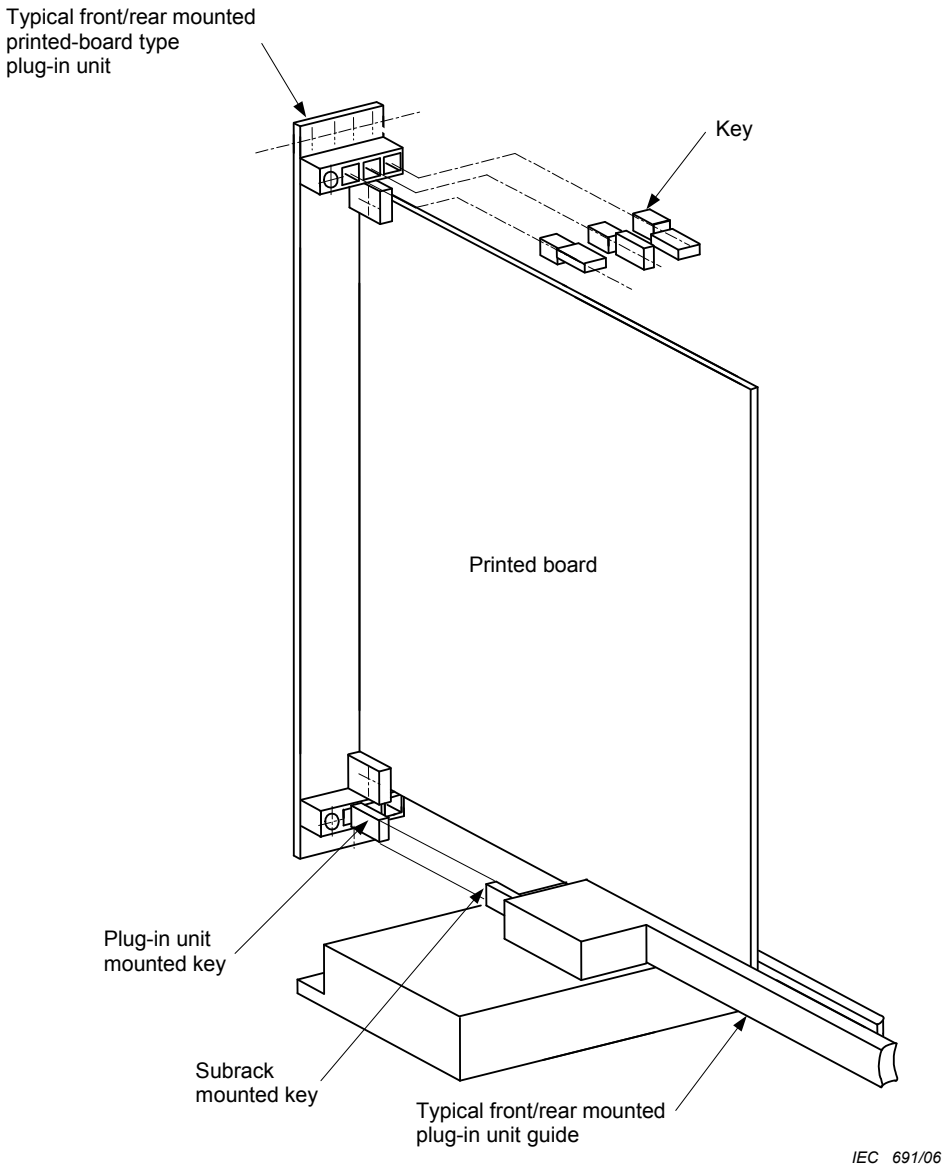

Figure 11 – Arrangement of key/coding system for plug-in units

Documents
Document Sharing Hub
Full document details: IEC 60917-2-3 2006

8.2 Subrack interface dimensions – Key/coding system on the plug-in unit guides

Dimensions in millimetres

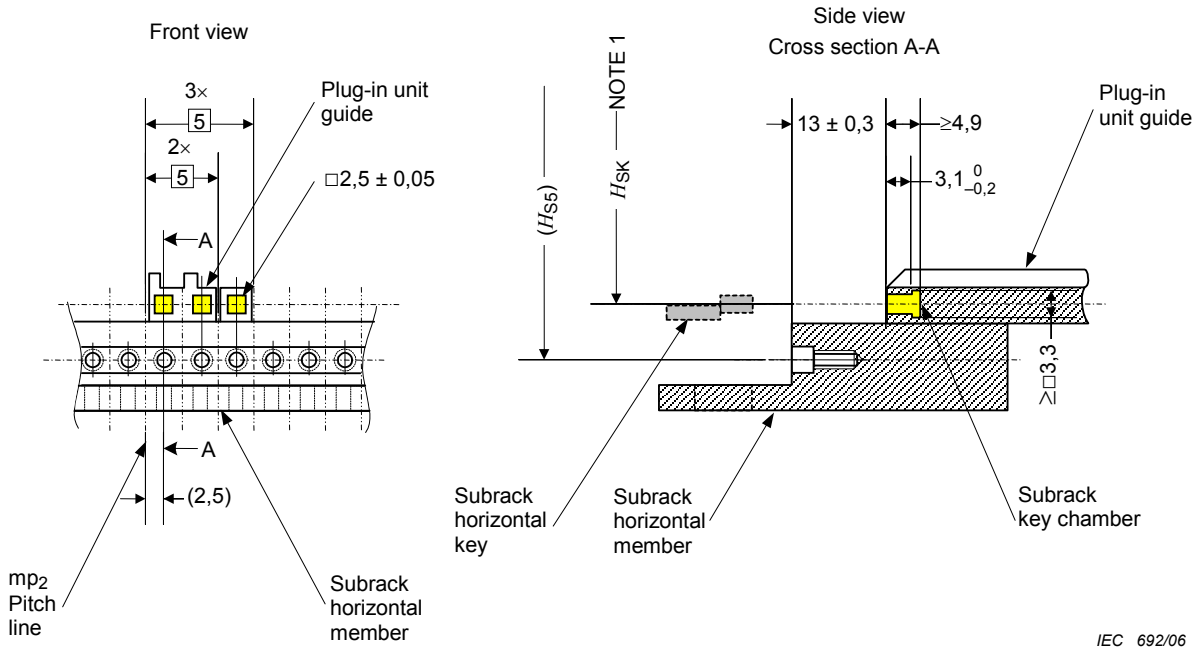

NOTE 1 For the H_{SK} dimension, see Table 1.

NOTE 2 Dimensions in parentheses are in accordance with IEC 60917-2-2 (see Table 2).

Figure 12 – Subrack interface dimensions – Key/coding system on the plug-in unit guides

Documents
Document Sharing Hub
Full document details: IEC 60917-2-3 2006

Dimensions in millimetres

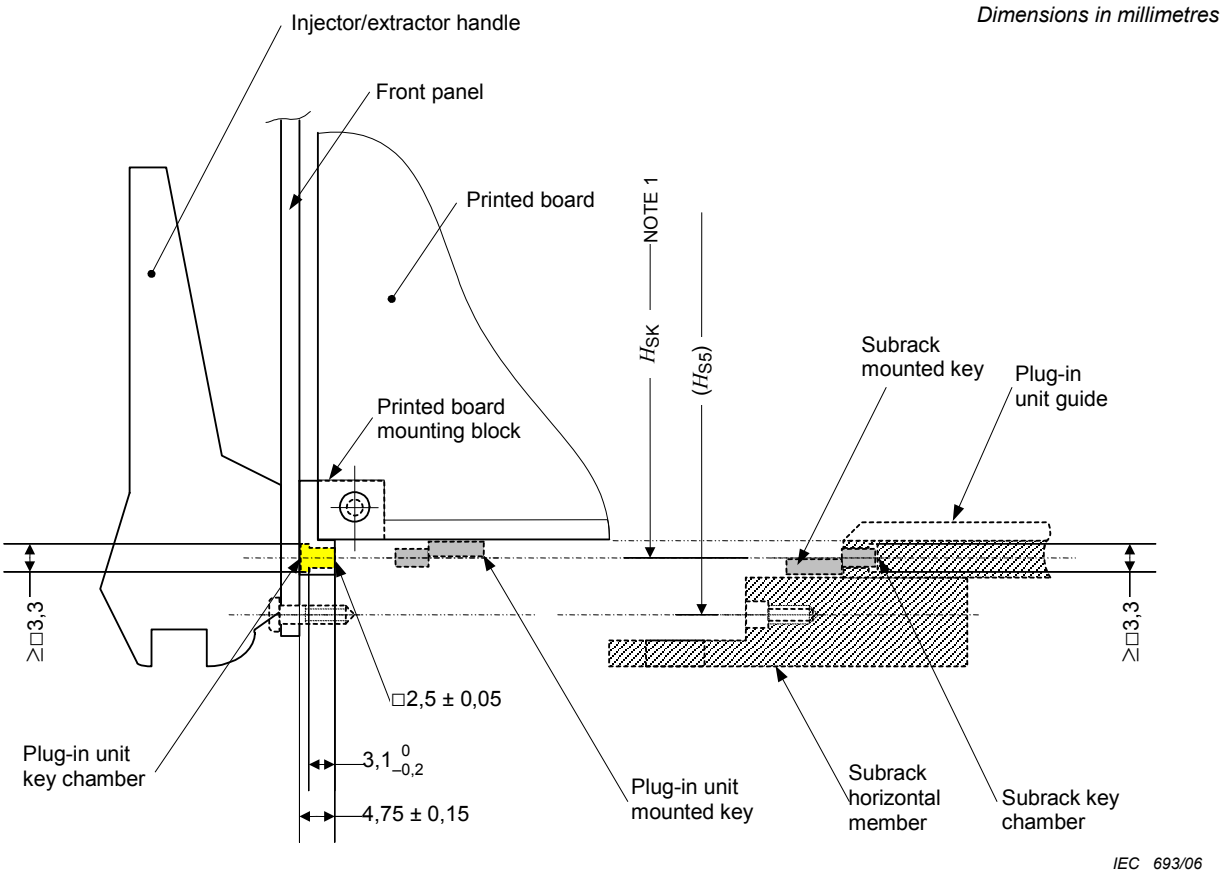

NOTE 1 For the H_{SK} dimension, see Table 1.

NOTE 2 Dimensions in parentheses are in accordance with IEC 60917-2-2 (see Table 2).

Figure 13 – Plug-in unit interface dimensions – Key/coding system on the plug-in unit guides

8.3 Key dimensions – Key/coding system on the plug-in unit guides

The key dimensions will allow the programming of four positions within one chamber of the subrack and the plug-in units respectively. The keys shall be designed for self-retaining snap-in assembly (see Figures 14 and 15).

The key chambers of the subracks and the plug-in units are identified by six letters; they are A, B, C, D, E and F (see Figure 15). Subracks of 6 mp_1 (6 SU) in height and associated plug-in units typically provide the keying chambers in the lower position that are identified by three letters, D, E and F. Subracks and plug-in units having a height of 12 mp_1 (12 SU) and 18 mp_1 (18 SU) may have the keying chamber in the upper and lower positions that are identified by six letters from A to F.

Documents
Document Sharing Hub
Full document details: IEC 60917-2-3 2006

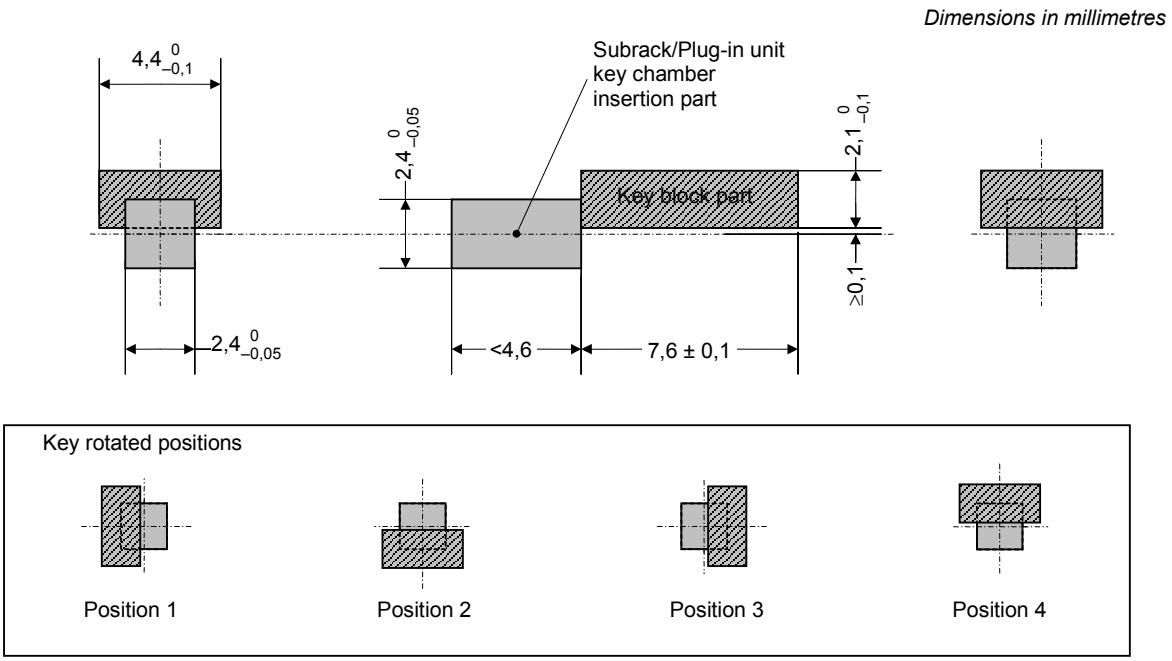

Figure 14 – Key dimensions and rotated key positions – Key/coding system on the plug-in unit guides

Documents
Document Sharing Hub
Full document details: IEC 60917-2-3 2006