IEC 60917-2-4

Edition 1.0 2010-03

INTERNATIONAL STANDARD

NORME INTERNATIONALE

colour inside

Modular order for the development of mechanical structures for electronic equipment practices – Part 2-4: Sectional specification – Interface co-ordination dimensions for the 25 mm equipment practice – Adaptation dimensions for subracks or chassis applicable in cabinets or racks in accordance with IEC 60297-3-100 (19 in)

Ordre modulaire pour le développement des structures mécaniques pour les infrastructures électroniques – Partie 2-4: Spécification intermédiaire – Dimensions de coordination pour les interfaces des infrastructures au pas de 25 mm – Dimensions d'adaptation des bacs ou des châssis, applicables dans les baies ou les bâtis, conformément à la CEI 60297-3-100 (19 pouces)

IEC 60917-2-4:2010

Documents
Document Sharing Hub

Full document details: IEC 60917-2-4 2010

THIS PUBLICATION IS COPYRIGHT PROTECTED

Copyright © 2010 IEC, Geneva, Switzerland

All rights reserved. Unless otherwise specified, no part of this publication may be reproduced or utilized in any form or by any means, electronic or mechanical, including photocopying and microfilm, without permission in writing from either IEC or IEC's member National Committee in the country of the requester.
If you have any questions about IEC copyright or have an enquiry about obtaining additional rights to this publication, please contact the address below or your local IEC member National Committee for further information.

Droits de reproduction réservés. Sauf indication contraire, aucune partie de cette publication ne peut être reproduite ni utilisée sous quelque forme que ce soit et par aucun procédé, électronique ou mécanique, y compris la photocopie et les microfilms, sans l'accord écrit de la CEI ou du Comité national de la CEI du pays du demandeur.
Si vous avez des questions sur le copyright de la CEI ou si vous désirez obtenir des droits supplémentaires sur cette publication, utilisez les coordonnées ci-après ou contactez le Comité national de la CEI de votre pays de résidence.

IEC Central Office
3, rue de Varembé
CH-1211 Geneva 20
Switzerland
Email: inmail@iec.ch
Web: www.iec.ch

About the IEC

The International Electrotechnical Commission (IEC) is the leading global organization that prepares and publishes International Standards for all electrical, electronic and related technologies.

About IEC publications

The technical content of IEC publications is kept under constant review by the IEC. Please make sure that you have the latest edition, a corrigenda or an amendment might have been published.

- Catalogue of IEC publications: www.iec.ch/searchpub
The IEC on-line Catalogue enables you to search by a variety of criteria (reference number, text, technical committee,…). It also gives information on projects, withdrawn and replaced publications.
- IEC Just Published: www.iec.ch/online_news/justpub
Stay up to date on all new IEC publications. Just Published details twice a month all new publications released. Available on-line and also by email.
- Electropedia: www.electropedia.org
The world's leading online dictionary of electronic and electrical terms containing more than 20 000 terms and definitions in English and French, with equivalent terms in additional languages. Also known as the International Electrotechnical Vocabulary online.
- Customer Service Centre: www.iec.ch/webstore/custserv
If you wish to give us your feedback on this publication or need further assistance, please visit the Customer Service Centre FAQ or contact us:
Email: csc@iec.ch
Tel.: +41 22 919 02 11
Fax: +41 22 919 03 00

A propos de la CEI

La Commission Electrotechnique Internationale (CEI) est la première organisation mondiale qui élabore et publie des normes internationales pour tout ce qui a trait à l'électricité, à l'électronique et aux technologies apparentées.

A propos des publications CEI

Le contenu technique des publications de la CEI est constamment revu. Veuillez vous assurer que vous possédez l'édition la plus récente, un corrigendum ou amendement peut avoir été publié.

- Catalogue des publications de la CEI: www.iec.ch/searchpub/cur_fut-f.htm
Le Catalogue en-ligne de la CEI vous permet d'effectuer des recherches en utilisant différents critères (numéro de référence, texte, comité d'études,…). Il donne aussi des informations sur les projets et les publications retirées ou remplacées.
- Just Published CEI: www.iec.ch/online_news/justpub
Restez informé sur les nouvelles publications de la CEI. Just Published détaille deux fois par mois les nouvelles publications parues. Disponible en-ligne et aussi par email.
- Electropedia: www.electropedia.org
Le premier dictionnaire en ligne au monde de termes électroniques et électriques. Il contient plus de 20 000 termes et définitions en anglais et en français, ainsi que les termes équivalents dans les langues additionnelles. Egalement appelé Vocabulaire Electrotechnique International en ligne.
- Service Clients: www.iec.ch/webstore/custserv/custserv_entry-f.htm
Si vous désirez nous donner des commentaires sur cette publication ou si vous avez des questions, visitez le FAQ du Service clients ou contactez-nous:
Email: csc@iec.ch
Tél.: +41 22 919 02 11
Fax: +41 22 919 03 00

Documents
Document Sharing Hub

Full document details: IEC 60917-2-4 2010

IEC 60917-2-4

Edition 1.0 2010-03

INTERNATIONAL STANDARD

NORME INTERNATIONALE

colour inside

Modular order for the development of mechanical structures for electronic equipment practices – Part 2-4: Sectional specification – Interface co-ordination dimensions for the 25 mm equipment practice – Adaptation dimensions for subracks or chassis applicable in cabinets or racks in accordance with IEC 60297-3-100 (19 in)

Ordre modulaire pour le développement des structures mécaniques pour les infrastructures électroniques – Partie 2-4: Spécification intermédiaire – Dimensions de coordination pour les interfaces des infrastructures au pas de 25 mm – Dimensions d'adaptation des bacs ou des châssis, applicables dans les baies ou les bâtis, conformément à la CEI 60297-3-100 (19 pouces)

INTERNATIONAL ELECTROTECHNICAL COMMISSION

COMMISSION ELECTROTECHNIQUE INTERNATIONALE

PRICE CODE
CODE PRIX N

ICS 31.240

ISBN 978-2-88910-330-0

® Registered trademark of the International Electrotechnical Commission
Marque déposée de la Commission Electrotechnique Internationale

Documents
Document Sharing Hub

Full document details: IEC 60917-2-4 2010

CONTENTS

FOREWORD 3
INTRODUCTION 5
1 Scope and object 6
2 Normative references 6
3 Arrangement overview (Figure 1) and definitions 7
4 Dimensions for adaptor flanges of the specific metric subracks or chassis (suitable only where W_{S1} = 425 mm) mountable into 19 in cabinets or racks 8
4.1 General 8
4.2 Dimensions for mounting holes arrangements on the adaptor flanges, mounting layout referred to the bottom pitch lines of the metric subracks or chassis 8
4.3 Dimensions for mounting holes arrangements on the adaptor flanges, mounting layout referred to the unit centre lines of the metric subracks or chassis 10
Bibliography 14

Figure 1 – Arrangement overview – Adaptation of specific subracks (aperture width for plug-in units: W_{S1} = 425 mm, 85 × 5,0 mm) of IEC 60917-2-4 into cabinets of IEC 60297-3-100 7
Figure 2 – Mounting hole arrangements of the adaptor flanges, mounting layout referred to the bottom pitch lines of the metric subracks or chassis 8
Figure 3 – Dimensions of mounting hole positions of the adaptor flanges, mounting layout referred to the bottom pitch lines of the metric subracks or chassis 9
Figure 4 – Mounting hole arrangements on the adaptor flanges, mounting layout referred to the unit centre lines of the metric subracks or chassis 11
Figure 5 – Dimensions of mounting holes positions of the adaptor flanges, mounting layout referred to the unit centre lines of the metric subracks or chassis 12

Table 1 – Dimensions of mounting holes positions of the adaptor flanges, mounting layout referred to the bottom pitch lines of the metric subracks or chassis 10
Table 2 – Dimensions of mounting holes positions of the adaptor flange, mounting layout referred to the unit centre lines of the metric subracks or chassis 13

Documents
Document Sharing Hub
Full document details: IEC 60917-2-4 2010

INTERNATIONAL ELECTROTECHNICAL COMMISSION

MODULAR ORDER FOR THE DEVELOPMENT OF MECHANICAL STRUCTURES FOR ELECTRONIC EQUIPMENT PRACTICES –

Part 2-4: Sectional specification – Interface co-ordination dimensions for the 25 mm equipment practice – Adaptation dimensions for subracks or chassis applicable in cabinets or racks in accordance with IEC 60297-3-100 (19 in)

FOREWORD

1) The International Electrotechnical Commission (IEC) is a worldwide organization for standardization comprising all national electrotechnical committees (IEC National Committees). The object of IEC is to promote international co-operation on all questions concerning standardization in the electrical and electronic fields. To this end and in addition to other activities, IEC publishes International Standards, Technical Specifications, Technical Reports, Publicly Available Specifications (PAS) and Guides (hereafter referred to as "IEC Publication(s)"). Their preparation is entrusted to technical committees; any IEC National Committee interested in the subject dealt with may participate in this preparatory work. International, governmental and non-governmental organizations liaising with the IEC also participate in this preparation. IEC collaborates closely with the International Organization for Standardization (ISO) in accordance with conditions determined by agreement between the two organizations.
2) The formal decisions or agreements of IEC on technical matters express, as nearly as possible, an international consensus of opinion on the relevant subjects since each technical committee has representation from all interested IEC National Committees.
3) IEC Publications have the form of recommendations for international use and are accepted by IEC National Committees in that sense. While all reasonable efforts are made to ensure that the technical content of IEC Publications is accurate, IEC cannot be held responsible for the way in which they are used or for any misinterpretation by any end user.
4) In order to promote international uniformity, IEC National Committees undertake to apply IEC Publications transparently to the maximum extent possible in their national and regional publications. Any divergence between any IEC Publication and the corresponding national or regional publication shall be clearly indicated in the latter.
5) IEC itself does not provide any attestation of conformity. Independent certification bodies provide conformity assessment services and, in some areas, access to IEC marks of conformity. IEC is not responsible for any services carried out by independent certification bodies.
6) All users should ensure that they have the latest edition of this publication.
7) No liability shall attach to IEC or its directors, employees, servants or agents including individual experts and members of its technical committees and IEC National Committees for any personal injury, property damage or other damage of any nature whatsoever, whether direct or indirect, or for costs (including legal fees) and expenses arising out of the publication, use of, or reliance upon, this IEC Publication or any other IEC Publications.
8) Attention is drawn to the Normative references cited in this publication. Use of the referenced publications is indispensable for the correct application of this publication.
9) Attention is drawn to the possibility that some of the elements of this IEC Publication may be the subject of patent rights. IEC shall not be held responsible for identifying any or all such patent rights.

International Standard IEC 60917-2-4 has been prepared by subcommittee 48D: Mechanical structures for electronic equipment, of IEC technical committee 48: Electromechanical components and mechanical structures for electronic equipment.

AVA Documents
Document Sharing Hub

Full document details: IEC 60917-2-4 2010

The text of this standard is based on the following documents:

FDIS	Report on voting
48D/420/FDIS	48D/424/RVD

Full information on the voting for the approval of this standard can be found in the report on voting indicated in the above table.

A list of all parts of IEC 60917 series, under the general title *Modular order for the development of mechanical structures for electronic equipment practices*, can be found on the IEC website.

This publication has been drafted in accordance with the ISO/IEC Directives, Part 2.

The committee has decided that the contents of this publication will remain unchanged until the stability indicated on the IEC web site under "http://webstore.iec.ch" in the data related to the specific publication. At this date, the publication will be

- reconfirmed,
- withdrawn,
- replaced by a revised edition, or
- amended.

IMPORTANT – The 'colour inside' logo on the cover page of this publication indicates that it contains colours which are considered to be useful for the correct understanding of its contents. Users should therefore print this document using a colour printer.

Documents
Document Sharing Hub

Full document details: IEC 60917-2-4 2010

INTRODUCTION

The IEC 60917 series of standards provides definitions of mechanical structure and dimensions for metric cabinets, racks, subracks, chassis and plug-in units based on metric modular ordered dimensions. The later developed IEC 60917 series of standards, compared to IEC 60297, provides more logical design practices based on metric dimensioning.

The IEC 60297 series of standards also define structures and interface dimensions for 19 in cabinets, racks and their compatible subracks and chassis. Because of the longer history of the IEC 60297 series of standards and their applications, the combination of 19 in based cabinets, racks, subracks and chassis are broadly applied for all industrial electronic fields in the world.

Requests for combined applications with both mechanical structures, the IEC 60917 series (metric standard) and the IEC 60297 series (19 in standard), resulted in requirements to mount metric subracks or chassis into 19 in standard cabinets or racks and, vice versa, 19 in subracks or chassis into metric cabinets or racks.

To cope with the requirements and needs, it is required to develop definitions for appropriate adaptation dimensions of flanges for metric or 19 in subracks or chassis to mount them into cabinets or racks in accordance with 19 in or metric standard. And the definitions of adaptation dimensions bring economical solutions for installations of electronic equipment into existing cabinets or racks. Further, they provide guidance to electro-mechanical designers to develop systems suitable to be mounted into both IEC standard series flexibly.

To meet such market needs, this standard defines adaptation dimensions for metric subracks or chassis applicable for 19 in cabinets or racks. (Dimensions for the applications, where 19 in subracks or chassis are mounted on metric cabinets or racks, are defined in a separate standard, i.e. IEC 60297-3-106.)

Documents
Document Sharing Hub

Full document details: IEC 60917-2-4 2010

MODULAR ORDER FOR THE DEVELOPMENT OF MECHANICAL STRUCTURES FOR ELECTRONIC EQUIPMENT PRACTICES –

Part 2-4: Sectional specification – Interface co-ordination dimensions for the 25 mm equipment practice – Adaptation dimensions for subracks or chassis applicable in cabinets or racks in accordance with IEC 60297-3-100 (19 in)

1 Scope and object

This part of IEC 60917 specifies dimensions for mounting flanges of metric subracks or chassis that are to be mounted into 19 in cabinets or racks.

Additional dimensions for subracks or chassis are according to the IEC 60917 series, and for 19 in cabinets or racks to the IEC 60297 series.

EMC, seismic climatic and environmental requirements and tests, are defined in the IEC 61587 series.

The drawings used in this standard are not intended to indicate product design, only the specific dimensions that shall be used.

The terminology used complies with IEC 60917-1.

2 Normative references

The following referenced documents are indispensable for the application of this document. For dated references, only the edition cited applies. For undated references, the latest edition of the referenced document (including any amendments) applies.

IEC 60297 (all parts), *Mechanical structures for electronic equipment – Dimensions of mechanical structures of the 482,6 mm (19 in) series*

IEC 60297-3-100, *Mechanical structures for electronic equipment – Dimensions of mechanical structures of the 482,6 mm (19in) series – Part 3-100: Basic dimensions of front panels, subracks, chassis, racks and cabinets*

IEC 60297-3-106, *Mechanical structures for electronic equipment – Dimensions of mechanical structures of the 482,6 mm (19 in) series – Part 3-106: Adaptation dimensions for subracks and chassis applicable to metric cabinets or racks in accordance with IEC 60917-2-1*

IEC 60917 (all parts), *Modular order for the development of mechanical structures for electronic equipment practice*

IEC 60917-2-2, *Modular order for the development of mechanical structures for electronic equipment practices – Part 2: Sectional specification – Interface co-ordination dimensions for the 25 mm equipment practice – Section 2: Detail specification – Dimensions for subracks, chassis, backplanes, front panels and plug-in units*

Documents
Document Sharing Hub

Full document details: IEC 60917-2-4 2010

3 Arrangement overview (Figure 1) and definitions

This standard defines dimensions for adaptor flanges suitable for metric subracks or chassis (aperture width for plug-in units: W_{S1} = 425 mm, 85 × 5,0 mm) that are applicable for mounting into 19 in cabinets or racks.

Dimensions for applications where 19 in subracks or chassis are to be mounted into metric cabinets or racks are defined in a separate standard (IEC 60297-3-106).

All other dimensions are in compliance with the IEC 60917 series (metric standard) and IEC 60297 series (19 in standard).

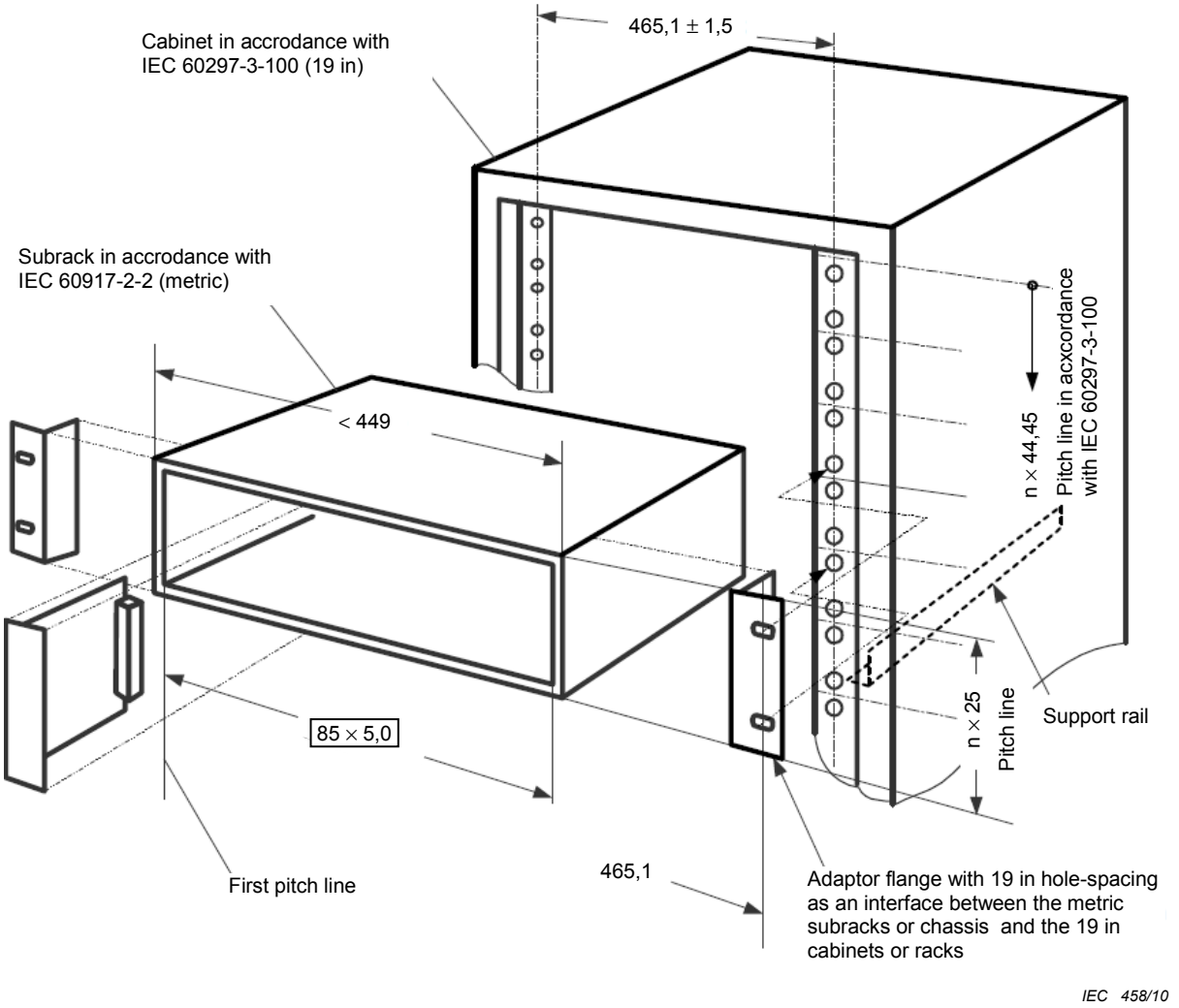

Dimensions in mm

Figure 1 – Arrangement overview –
Adaptation of specific subracks (aperture width for plug-in units:
W_{S1} = 425 mm, 85 × 5,0 mm) of IEC 60917-2-4 into cabinets of IEC 60297-3-100

Documents
Document Sharing Hub
Full document details: IEC 60917-2-4 2010

4 Dimensions for adaptor flanges of the specific metric subracks or chassis (suitable only where W_{S1} = 425 mm) mountable into 19 in cabinets or racks

4.1 General

Dimensions for mounting holes arrangements on the flanges are arranged by the two mounting layouts in the cabinets:

a) Mounting layout referred to the pitch lines of the metric subracks or chassis, and

b) Mounting layout referred to the unit centre lines of the metric subracks or chassis.

4.2 Dimensions for mounting holes arrangements on the adaptor flanges, mounting layout referred to the bottom pitch lines of the metric subracks or chassis

Figure 2 shows the mounting holes arrangements on the adaptor flanges.

Figure 3 and Table 1 show detailed dimensions of mounting holes positions of the adaptor flange.

This mounting layout may be recommended for existing subracks or chassis with their support rails utilized.

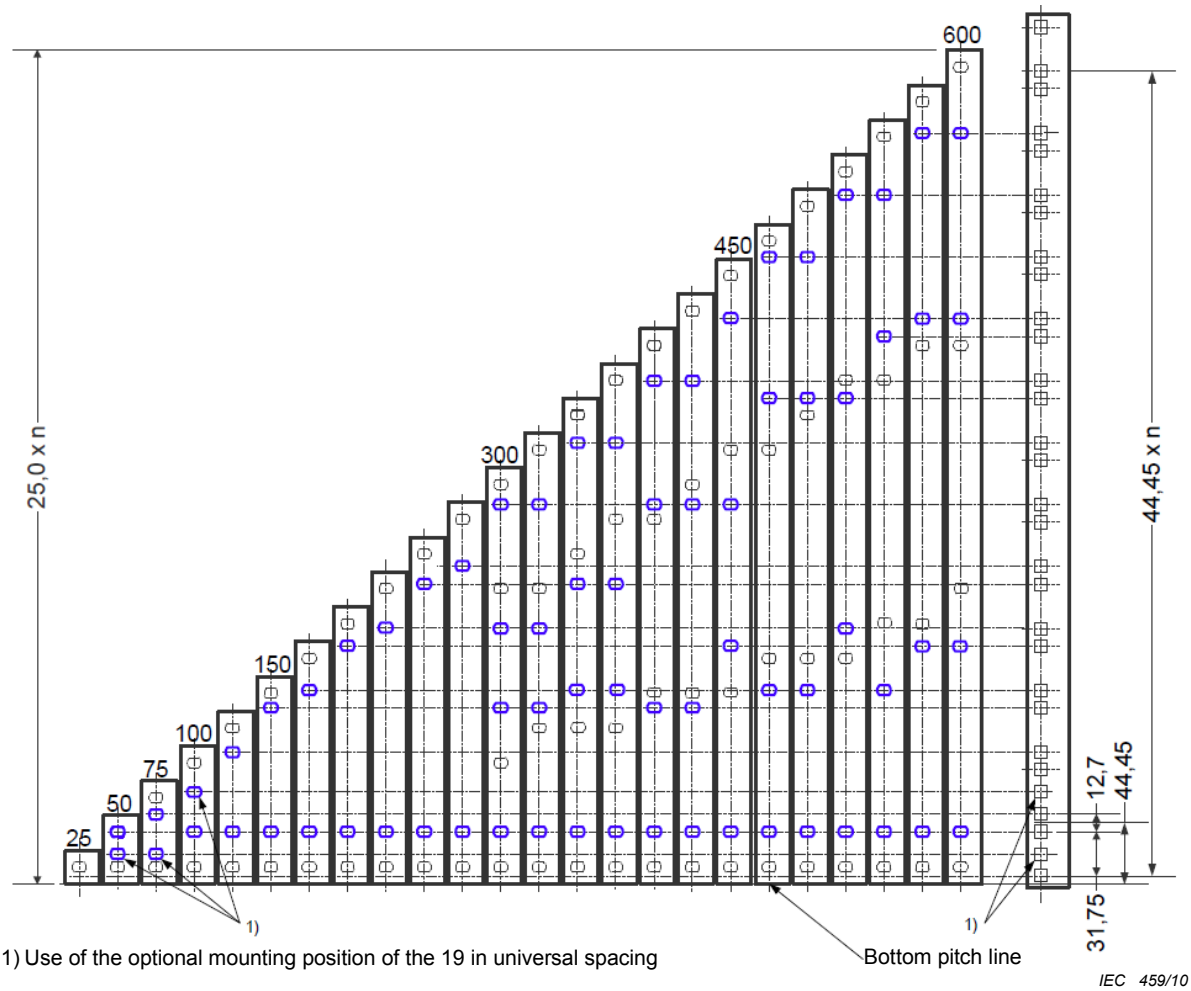

Dimensions in mm

Figure 2 – Mounting hole arrangements of the adaptor flanges, mounting layout referred to the bottom pitch lines of the metric subracks or chassis

AVA Documents
Document Sharing Hub
Full document details: IEC 60917-2-4 2010

Flange height: n × 25

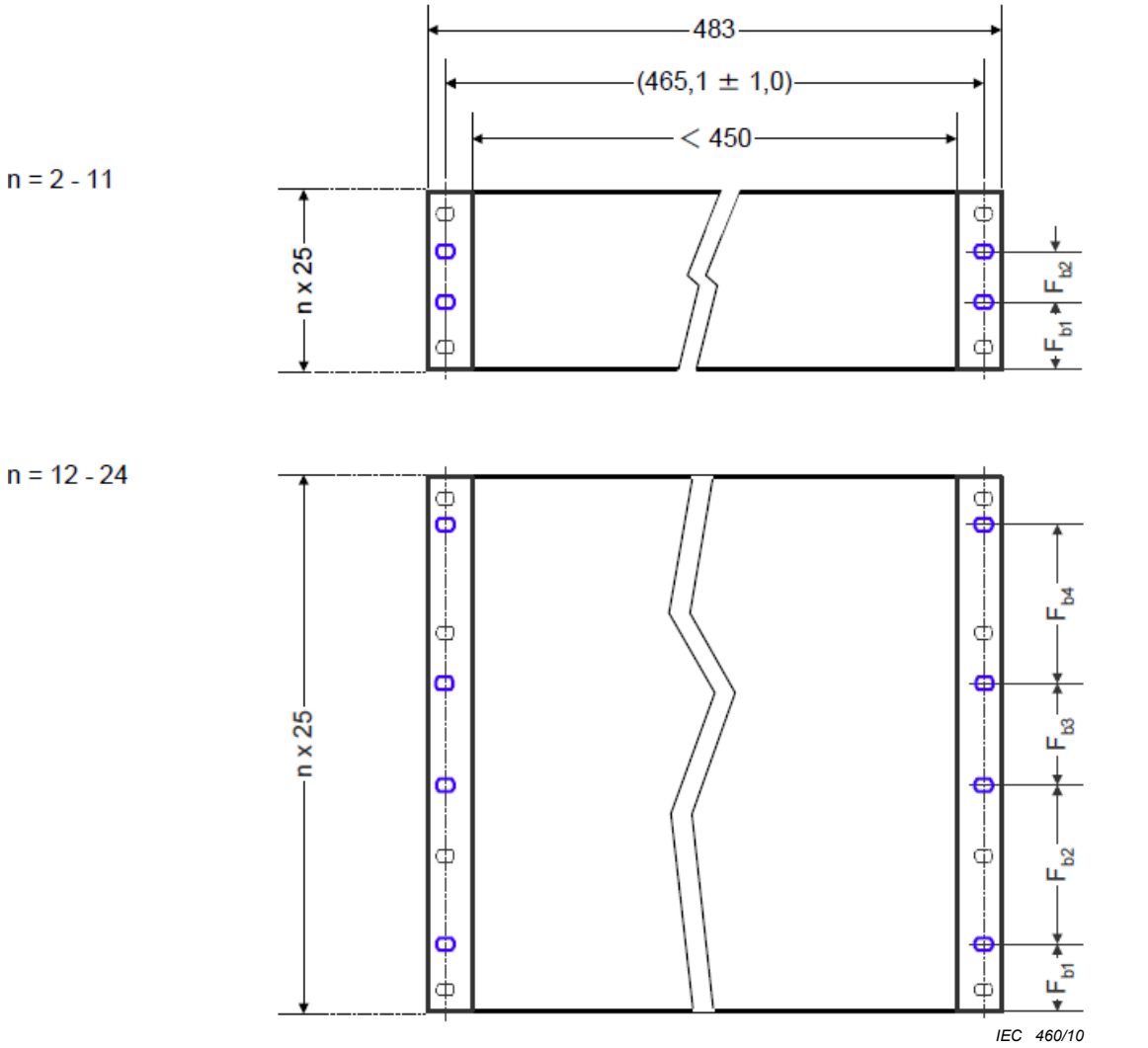

Dimensions in mm

Figure 3 – Dimensions of mounting hole positions of the adaptor flanges, mounting layout referred to the bottom pitch lines of the metric subracks or chassis

Documents
Document Sharing Hub
Full document details: IEC 60917-2-4 2010