IEC 60940

Edition 2.0 2015-03

INTERNATIONAL STANDARD

NORME INTERNATIONALE

Guidance information on the application of capacitors, resistors, inductors and complete filter units for electromagnetic interference suppression

Guide d'emploi des condensateurs, résistances, inductances et filtres complets d'antiparasitage

IEC 60940:2015-03(en-fr)

Documents
Document Sharing Hub

Full document details: IEC 60940 2015

THIS PUBLICATION IS COPYRIGHT PROTECTED

Copyright © 2015 IEC, Geneva, Switzerland

All rights reserved. Unless otherwise specified, no part of this publication may be reproduced or utilized in any form or by any means, electronic or mechanical, including photocopying and microfilm, without permission in writing from either IEC or IEC's member National Committee in the country of the requester. If you have any questions about IEC copyright or have an enquiry about obtaining additional rights to this publication, please contact the address below or your local IEC member National Committee for further information.

Droits de reproduction réservés. Sauf indication contraire, aucune partie de cette publication ne peut être reproduite ni utilisée sous quelque forme que ce soit et par aucun procédé, électronique ou mécanique, y compris la photocopie et les microfilms, sans l'accord écrit de l'IEC ou du Comité national de l'IEC du pays du demandeur. Si vous avez des questions sur le copyright de l'IEC ou si vous désirez obtenir des droits supplémentaires sur cette publication, utilisez les coordonnées ci-après ou contactez le Comité national de l'IEC de votre pays de résidence.

IEC Central Office
3, rue de Varembé
CH-1211 Geneva 20
Switzerland

Tel.: +41 22 919 02 11
Fax: +41 22 919 03 00
info@iec.ch
www.iec.ch

About the IEC
The International Electrotechnical Commission (IEC) is the leading global organization that prepares and publishes International Standards for all electrical, electronic and related technologies.

About IEC publications
The technical content of IEC publications is kept under constant review by the IEC. Please make sure that you have the latest edition, a corrigenda or an amendment might have been published.

IEC Catalogue - webstore.iec.ch/catalogue
The stand-alone application for consulting the entire bibliographical information on IEC International Standards, Technical Specifications, Technical Reports and other documents. Available for PC, Mac OS, Android Tablets and iPad.

IEC publications search - www.iec.ch/searchpub
The advanced search enables to find IEC publications by a variety of criteria (reference number, text, technical committee,…). It also gives information on projects, replaced and withdrawn publications.

IEC Just Published - webstore.iec.ch/justpublished
Stay up to date on all new IEC publications. Just Published details all new publications released. Available online and also once a month by email.

Electropedia - www.electropedia.org
The world's leading online dictionary of electronic and electrical terms containing more than 30 000 terms and definitions in English and French, with equivalent terms in 15 additional languages. Also known as the International Electrotechnical Vocabulary (IEV) online.

IEC Glossary - std.iec.ch/glossary
More than 60 000 electrotechnical terminology entries in English and French extracted from the Terms and Definitions clause of IEC publications issued since 2002. Some entries have been collected from earlier publications of IEC TC 37, 77, 86 and CISPR.

IEC Customer Service Centre - webstore.iec.ch/csc
If you wish to give us your feedback on this publication or need further assistance, please contact the Customer Service Centre: csc@iec.ch.

A propos de l'IEC
La Commission Electrotechnique Internationale (IEC) est la première organisation mondiale qui élabore et publie des Normes internationales pour tout ce qui a trait à l'électricité, à l'électronique et aux technologies apparentées.

A propos des publications IEC
Le contenu technique des publications IEC est constamment revu. Veuillez vous assurer que vous possédez l'édition la plus récente, un corrigendum ou amendement peut avoir été publié.

Catalogue IEC - webstore.iec.ch/catalogue
Application autonome pour consulter tous les renseignements bibliographiques sur les Normes internationales, Spécifications techniques, Rapports techniques et autres documents de l'IEC. Disponible pour PC, Mac OS, tablettes Android et iPad.

Recherche de publications IEC - www.iec.ch/searchpub

La recherche avancée permet de trouver des publications IEC en utilisant différents critères (numéro de référence, texte, comité d'études,…). Elle donne aussi des informations sur les projets et les publications remplacées ou retirées.

IEC Just Published - webstore.iec.ch/justpublished

Restez informé sur les nouvelles publications IEC. Just Published détaille les nouvelles publications parues. Disponible en ligne et aussi une fois par mois par email.

Electropedia - www.electropedia.org

Le premier dictionnaire en ligne de termes électroniques et électriques. Il contient plus de 30 000 termes et définitions en anglais et en français, ainsi que les termes équivalents dans 15 langues additionnelles. Egalement appelé Vocabulaire Electrotechnique International (IEV) en ligne.

Glossaire IEC - std.iec.ch/glossary
Plus de 60 000 entrées terminologiques électrotechniques, en anglais et en français, extraites des articles Termes et Définitions des publications IEC parues depuis 2002. Plus certaines entrées antérieures extraites des publications des CE 37, 77, 86 et CISPR de l'IEC.

Service Clients - webstore.iec.ch/csc

Si vous désirez nous donner des commentaires sur cette publication ou si vous avez des questions contactez-nous: csc@iec.ch.

Documents
Document Sharing Hub

Full document details: IEC 60940 2015

IEC 60940

Edition 2.0 2015-03

INTERNATIONAL STANDARD

NORME INTERNATIONALE

Guidance information on the application of capacitors, resistors, inductors and complete filter units for electromagnetic interference suppression

Guide d'emploi des condensateurs, résistances, inductances et filtres complets d'antiparasitage

INTERNATIONAL
ELECTROTECHNICAL
COMMISSION

COMMISSION
ELECTROTECHNIQUE
INTERNATIONALE

ICS 33.100

ISBN 978-2-8322-2290-4

Warning! Make sure that you obtained this publication from an authorized distributor.
Attention! Veuillez vous assurer que vous avez obtenu cette publication via un distributeur agréé.

® Registered trademark of the International Electrotechnical Commission
Marque déposée de la Commission Electrotechnique Internationale

AVA Documents
Document Sharing Hub

Full document details: IEC 60940 2015

CONTENTS

FOREWORD 3
1 Scope 5
2 Normative references 5
3 Electromagnetic and Radio frequency interference suppression (EMI/RFI) 5
3.1 General 5
3.2 Limits of interference 6
4 Classification of suppression components 6
4.1 Suppression components 6
4.2 Capacitors 8
4.3 Inductors 8
4.4 Filters 8
5 Choice of ratings for specific applications 8
5.1 Voltage 8
5.2 Current 9
5.3 Environmental classification (climatic category) 9
5.4 Insertion loss 9
6 Connection of suppression components 9
7 Safety aspects 10
7.1 Class X and Y capacitors 10
7.2 Leakage current 11
7.3 Mounting of radio interference suppression components in equipment and appliances 11
7.4 Electrical shock hazard protection testing 11
Bibliography 12

Figure 1 – Example use of suppression components in EMI filter 7

Documents
Document Sharing Hub

Full document details: IEC 60940 2015

INTERNATIONAL ELECTROTECHNICAL COMMISSION

GUIDANCE INFORMATION ON THE APPLICATION OF CAPACITORS, RESISTORS, INDUCTORS AND COMPLETE FILTER UNITS FOR ELECTROMAGNETIC INTERFERENCE SUPPRESSION

FOREWORD

1) The International Electrotechnical Commission (IEC) is a worldwide organization for standardization comprising all national electrotechnical committees (IEC National Committees). The object of IEC is to promote international co-operation on all questions concerning standardization in the electrical and electronic fields. To this end and in addition to other activities, IEC publishes International Standards, Technical Specifications, Technical Reports, Publicly Available Specifications (PAS) and Guides (hereafter referred to as "IEC Publication(s)"). Their preparation is entrusted to technical committees; any IEC National Committee interested in the subject dealt with may participate in this preparatory work. International, governmental and non-governmental organizations liaising with the IEC also participate in this preparation. IEC collaborates closely with the International Organization for Standardization (ISO) in accordance with conditions determined by agreement between the two organizations.
2) The formal decisions or agreements of IEC on technical matters express, as nearly as possible, an international consensus of opinion on the relevant subjects since each technical committee has representation from all interested IEC National Committees.
3) IEC Publications have the form of recommendations for international use and are accepted by IEC National Committees in that sense. While all reasonable efforts are made to ensure that the technical content of IEC Publications is accurate, IEC cannot be held responsible for the way in which they are used or for any misinterpretation by any end user.
4) In order to promote international uniformity, IEC National Committees undertake to apply IEC Publications transparently to the maximum extent possible in their national and regional publications. Any divergence between any IEC Publication and the corresponding national or regional publication shall be clearly indicated in the latter.
5) IEC itself does not provide any attestation of conformity. Independent certification bodies provide conformity assessment services and, in some areas, access to IEC marks of conformity. IEC is not responsible for any services carried out by independent certification bodies.
6) All users should ensure that they have the latest edition of this publication.
7) No liability shall attach to IEC or its directors, employees, servants or agents including individual experts and members of its technical committees and IEC National Committees for any personal injury, property damage or other damage of any nature whatsoever, whether direct or indirect, or for costs (including legal fees) and expenses arising out of the publication, use of, or reliance upon, this IEC Publication or any other IEC Publications.
8) Attention is drawn to the Normative references cited in this publication. Use of the referenced publications is indispensable for the correct application of this publication.
9) Attention is drawn to the possibility that some of the elements of this IEC Publication may be the subject of patent rights. IEC shall not be held responsible for identifying any or all such patent rights.

International Standard IEC 60940 has been prepared by IEC technical committee 40: Capacitors and resistors for electronic equipment.

This second edition cancels and replaces the first edition published in 1988. This second edition is a result of maintenance activities related to the previous edition. All changes that have been agreed upon can be categorized as minor revisions.

The text of this standard is based on the following documents:

FDIS	Report on voting
40/2337/FDIS	40/2362/RVD

Full information on the voting for the approval of this standard can be found in the report on voting indicated in the above table.

This publication has been drafted in accordance with the ISO/IEC Directives, Part 2.

AVA Documents
Document Sharing Hub

Full document details: IEC 60940 2015

The committee has decided that the contents of this publication will remain unchanged until the stability date indicated on the IEC website under "http://webstore.iec.ch" in the data related to the specific publication. At this date, the publication will be

- reconfirmed,
- withdrawn,
- replaced by a revised edition, or
- amended.

Documents
Document Sharing Hub

Full document details: IEC 60940 2015

GUIDANCE INFORMATION ON THE APPLICATION OF CAPACITORS, RESISTORS, INDUCTORS AND COMPLETE FILTER UNITS FOR ELECTROMAGNETIC INTERFERENCE SUPPRESSION

1 Scope

This international standard provides guidance applicable to information on application of capacitors, resistors, inductors, and complete filter units for electromagnetic interference suppression.

2 Normative references

The following documents, in whole or in part, are normatively referenced in this document and are indispensable for its application. For dated references, only the edition cited applies. For undated references, the latest edition of the referenced document (including any amendments) applies.

IEC 60335-1, *Household and similar electrical appliances – Safety – Part 1: General requirements*

IEC 60384-14, *Fixed capacitors for use in electronic equipment – Part 14: Sectional specification – Fixed capacitors for electromagnetic interference suppression and connection to the supply mains*

3 Electromagnetic and Radio frequency interference suppression (EMI/RFI)

3.1 General

Electromagnetic interference, EMI, is any electromagnetic emission or any electric or electronic disturbance which causes an undesirable response, malfunctioning or degradation in the performance of electrical equipment.

Radio frequency interference, RFI, is any electrical energy with content within the frequency range dedicated to radio frequency transmission.

Conducted RFI is most often found in the low frequency range from 150 kHz to 30 MHz.

Radiated RFI is most often found in the frequency range from 30 MHz to 10 GHz.

EMI or RFI propagate through conduction over signal and power lines and through radiation in free space.

Electrical machines and apparatus may generate electromagnetic interferences (EMI) which are fed back into power supply mains. These electromagnetic interferences may be picked up by apparatus connected to or placed close to the same power system up to a certain distance from the machine or apparatus.

The radio-frequency voltages may be generated both between conductors (phases) of the power system (symmetrical interference) and also between conductors (phases) and earth (asymmetrical interference). These voltages can cause electromagnetic radiation from the power lines.

AVA Documents
Document Sharing Hub

Full document details: IEC 60940 2015

Radio interference can be suppressed by providing a low impedance path for radio frequency currents close to the place where the radio frequency voltages are generated. This may be combined with a high impedance element which prevents the radio frequency currents from penetrating into the power supply system, but has no appreciable effect on the flow of power current.

3.2 Limits of interference

In various countries, mandatory limits are set to the radio-frequency in a given frequency range emanating from electrical machines and apparatus.

A survey of these limits is given in relevant EMC-standards such as CISPR 11.

Some electrical apparatus require for their operation a power-supply voltage free from radio-interference to a greater extent than that guaranteed by the requirements mentioned above. In these cases, similar measures should be taken at a place in the power supply system close to the place where the apparatus is connected. When the apparatus is shielded (or placed in a shielded room), interference suppression will generally be applied at each point where the power supply system enters the shielded enclosure.

4 Classification of suppression components

4.1 Suppression components

An example of use of suppression components in EMI filter is shown in Figure 1.

Documents
Document Sharing Hub

Full document details: IEC 60940 2015

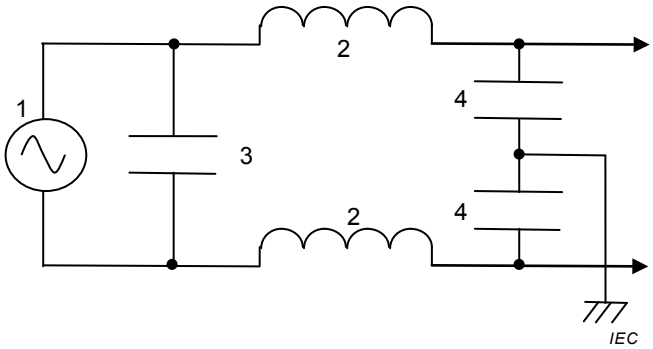

a) Single phase EMI filter

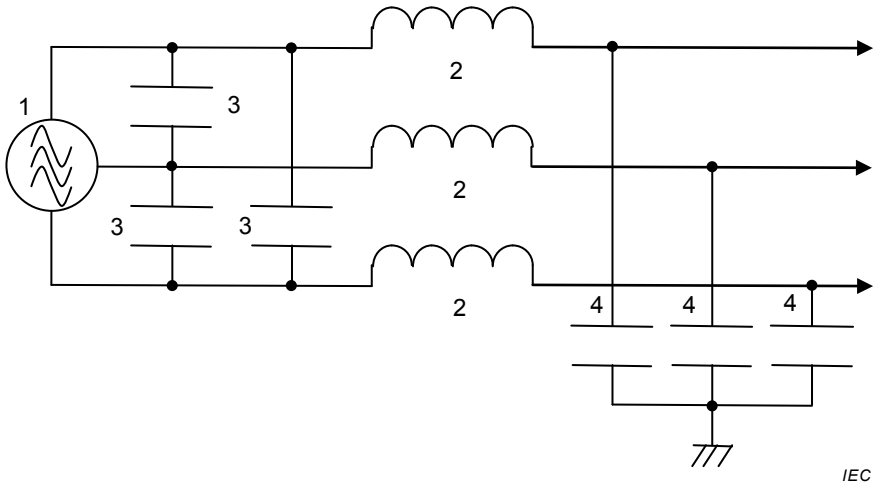

b) Three phase three wires EMI filter

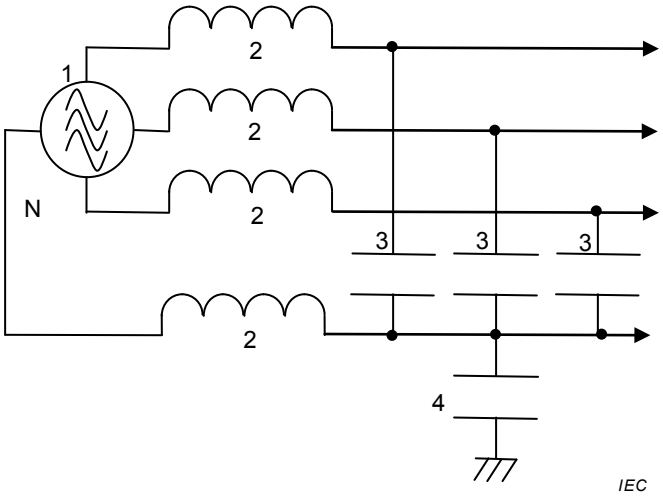

c) Three phase four wires EMI filter

Key

1 Mains
2 Inductor
3 X-capacitor
4 Y-capacitor
N Neutral

Figure 1 – Example use of suppression components in EMI filter

Documents
Document Sharing Hub
Full document details: IEC 60940 2015