# IEC 60958-4-2

Edition 1.0 2016-03

# INTERNATIONAL STANDARD

# NORME INTERNATIONALE

## Digital audio interface – Part 4-2: Professional applications – Metadata and subcode

## Interface audionumérique – Partie 4-2: Applications professionnelles – Métadonnées et sous-code

IEC 60958-4-2:2016-03(en-fr)

Documents
Document Sharing Hub

Full document details: IEC 60958-4-2 2016

**THIS PUBLICATION IS COPYRIGHT PROTECTED**
**Copyright © 2016 IEC, Geneva, Switzerland**

All rights reserved. Unless otherwise specified, no part of this publication may be reproduced or utilized in any form or by any means, electronic or mechanical, including photocopying and microfilm, without permission in writing from either IEC or IEC's member National Committee in the country of the requester. If you have any questions about IEC copyright or have an enquiry about obtaining additional rights to this publication, please contact the address below or your local IEC member National Committee for further information.

Droits de reproduction réservés. Sauf indication contraire, aucune partie de cette publication ne peut être reproduite ni utilisée sous quelque forme que ce soit et par aucun procédé, électronique ou mécanique, y compris la photocopie et les microfilms, sans l'accord écrit de l'IEC ou du Comité national de l'IEC du pays du demandeur. Si vous avez des questions sur le copyright de l'IEC ou si vous désirez obtenir des droits supplémentaires sur cette publication, utilisez les coordonnées ci-après ou contactez le Comité national de l'IEC de votre pays de résidence.

IEC Central Office
3, rue de Varembé
CH-1211 Geneva 20
Switzerland

Tel.: +41 22 919 02 11
Fax: +41 22 919 03 00
info@iec.ch
www.iec.ch

**About the IEC**
The International Electrotechnical Commission (IEC) is the leading global organization that prepares and publishes International Standards for all electrical, electronic and related technologies.

**About IEC publications**
The technical content of IEC publications is kept under constant review by the IEC. Please make sure that you have the latest edition, a corrigenda or an amendment might have been published.

**IEC Catalogue - webstore.iec.ch/catalogue**
The stand-alone application for consulting the entire bibliographical information on IEC International Standards, Technical Specifications, Technical Reports and other documents. Available for PC, Mac OS, Android Tablets and iPad.

**IEC publications search - www.iec.ch/searchpub**
The advanced search enables to find IEC publications by a variety of criteria (reference number, text, technical committee,…). It also gives information on projects, replaced and withdrawn publications.

**IEC Just Published - webstore.iec.ch/justpublished**
Stay up to date on all new IEC publications. Just Published details all new publications released. Available online and also once a month by email.

**Electropedia - www.electropedia.org**
The world's leading online dictionary of electronic and electrical terms containing 20 000 terms and definitions in English and French, with equivalent terms in 15 additional languages. Also known as the International Electrotechnical Vocabulary (IEV) online.

**IEC Glossary - std.iec.ch/glossary**
65 000 electrotechnical terminology entries in English and French extracted from the Terms and Definitions clause of IEC publications issued since 2002. Some entries have been collected from earlier publications of IEC TC 37, 77, 86 and CISPR.

**IEC Customer Service Centre - webstore.iec.ch/csc**
If you wish to give us your feedback on this publication or need further assistance, please contact the Customer Service Centre: csc@iec.ch.

---

**A propos de l'IEC**
La Commission Electrotechnique Internationale (IEC) est la première organisation mondiale qui élabore et publie des Normes internationales pour tout ce qui a trait à l'électricité, à l'électronique et aux technologies apparentées.

**A propos des publications IEC**
Le contenu technique des publications IEC est constamment revu. Veuillez vous assurer que vous possédez l'édition la plus récente, un corrigendum ou amendement peut avoir été publié.

**Catalogue IEC - webstore.iec.ch/catalogue**
Application autonome pour consulter tous les renseignements bibliographiques sur les Normes internationales, Spécifications techniques, Rapports techniques et autres documents de l'IEC. Disponible pour PC, Mac OS, tablettes Android et iPad.

**Recherche de publications IEC - www.iec.ch/searchpub**
La recherche avancée permet de trouver des publications IEC en utilisant différents critères (numéro de référence, texte, comité d'études,…). Elle donne aussi des informations sur les projets et les publications remplacées ou retirées.

**IEC Just Published - webstore.iec.ch/justpublished**
Restez informé sur les nouvelles publications IEC. Just Published détaille les nouvelles publications parues. Disponible en ligne et aussi une fois par mois par email.

**Electropedia - www.electropedia.org**
Le premier dictionnaire en ligne de termes électroniques et électriques. Il contient 20 000 termes et définitions en anglais et en français, ainsi que les termes équivalents dans 15 langues additionnelles. Egalement appelé Vocabulaire Electrotechnique International (IEV) en ligne.

**Glossaire IEC - std.iec.ch/glossary**
65 000 entrées terminologiques électrotechniques, en anglais et en français, extraites des articles Termes et Définitions des publications IEC parues depuis 2002. Plus certaines entrées antérieures extraites des publications des CE 37, 77, 86 et CISPR de l'IEC.

**Service Clients - webstore.iec.ch/csc**
Si vous désirez nous donner des commentaires sur cette publication ou si vous avez des questions contactez-nous: csc@iec.ch.

Documents
Document Sharing Hub

Full document details: IEC 60958-4-2 2016

# IEC 60958-4-2

Edition 1.0 2016-03

# INTERNATIONAL STANDARD

# NORME INTERNATIONALE

## Digital audio interface –
## Part 4-2: Professional applications – Metadata and subcode

## Interface audionumérique –
## Partie 4-2: Applications professionnelles – Métadonnées et sous-code

INTERNATIONAL
ELECTROTECHNICAL
COMMISSION

COMMISSION
ELECTROTECHNIQUE
INTERNATIONALE

ICS 33.160.30

ISBN 978-2-8322-3247-7

**Warning! Make sure that you obtained this publication from an authorized distributor.**
**Attention! Veuillez vous assurer que vous avez obtenu cette publication via un distributeur agréé.**

® Registered trademark of the International Electrotechnical Commission
Marque déposée de la Commission Electrotechnique Internationale

Documents
Document Sharing Hub

Full document details: IEC 60958-4-2 2016

CONTENTS

FOREWORD....4
INTRODUCTION....6
1 Scope....7
2 Normative references....7
3 Terms, definitions and abbreviations....7
3.1 Terms and definitions....7
3.2 Abbreviations....8
4 User data format....8
5 Channel status format....8
5.1 Channel status bit....8
5.2 Channel status block....8
5.3 Implementation....9
5.3.1 Implementation levels....9
5.3.2 Transmitter requirement....9
5.3.3 Receiver requirement....9
5.4 Documentation....9
5.5 Channel status content....9
5.5.1 General....9
5.5.2 Byte 0: Basic audio parameters....11
5.5.3 Byte 1: Channel modes, user bits management....12
5.5.4 Byte 2: Auxiliary bits, word length and alignment level....12
5.5.5 Byte 3: Multichannel modes....13
5.5.6 Byte 4: DARS, hidden information, multiple-rate sampling frequencies....14
5.5.7 Byte 5: Reserved....15
5.5.8 Bytes 6 to 9: Alphanumeric channel origin....16
5.5.9 Bytes 10 to 13: Alphanumeric channel destination....16
5.5.10 Bytes 14 to 17: Local sample address code....16
5.5.11 Bytes 18 to 21: Time-of-day sample address code....16
5.5.12 Byte 22: Reserved....16
5.5.13 Byte 23: Channel status data CRCC....17
5.6 Channel status when non-PCM audio is flagged....17
6 Auxiliary bits....17
6.1 Availability of auxiliary bits....17
6.2 Use of auxiliary bits....17
Annex A (informative) Channel modes....18
Annex B (informative) Provision of additional, voice-quality channels....19
Annex C (informative) Generation of CRCC (byte 23) for channel status....20
Bibliography....22

Figure 1 – Channel status data format....10
Figure B.1 – Frame and block structure....19
Figure C.1 – Flow diagram including exclusive or gates....20

Documents
Document Sharing Hub
Full document details: IEC 60958-4-2 2016

Table 1 – Non-PCM audio, protected status bits .....17

Documents
Document Sharing Hub

Full document details: IEC 60958-4-2 2016

INTERNATIONAL ELECTROTECHNICAL COMMISSION

# DIGITAL AUDIO INTERFACE –

## Part 4-2: Professional applications – Metadata and subcode

## FOREWORD

1) The International Electrotechnical Commission (IEC) is a worldwide organization for standardization comprising all national electrotechnical committees (IEC National Committees). The object of IEC is to promote international co-operation on all questions concerning standardization in the electrical and electronic fields. To this end and in addition to other activities, IEC publishes International Standards, Technical Specifications, Technical Reports, Publicly Available Specifications (PAS) and Guides (hereafter referred to as "IEC Publication(s)"). Their preparation is entrusted to technical committees; any IEC National Committee interested in the subject dealt with may participate in this preparatory work. International, governmental and non-governmental organizations liaising with the IEC also participate in this preparation. IEC collaborates closely with the International Organization for Standardization (ISO) in accordance with conditions determined by agreement between the two organizations.
2) The formal decisions or agreements of IEC on technical matters express, as nearly as possible, an international consensus of opinion on the relevant subjects since each technical committee has representation from all interested IEC National Committees.
3) IEC Publications have the form of recommendations for international use and are accepted by IEC National Committees in that sense. While all reasonable efforts are made to ensure that the technical content of IEC Publications is accurate, IEC cannot be held responsible for the way in which they are used or for any misinterpretation by any end user.
4) In order to promote international uniformity, IEC National Committees undertake to apply IEC Publications transparently to the maximum extent possible in their national and regional publications. Any divergence between any IEC Publication and the corresponding national or regional publication shall be clearly indicated in the latter.
5) IEC itself does not provide any attestation of conformity. Independent certification bodies provide conformity assessment services and, in some areas, access to IEC marks of conformity. IEC is not responsible for any services carried out by independent certification bodies.
6) All users should ensure that they have the latest edition of this publication.
7) No liability shall attach to IEC or its directors, employees, servants or agents including individual experts and members of its technical committees and IEC National Committees for any personal injury, property damage or other damage of any nature whatsoever, whether direct or indirect, or for costs (including legal fees) and expenses arising out of the publication, use of, or reliance upon, this IEC Publication or any other IEC Publications.
8) Attention is drawn to the Normative references cited in this publication. Use of the referenced publications is indispensable for the correct application of this publication.
9) Attention is drawn to the possibility that some of the elements of this IEC Publication may be the subject of patent rights. IEC shall not be held responsible for identifying any or all such patent rights.

International Standard IEC 60958-4-2 has been prepared by technical area 4: Digital system interfaces and protocols, of IEC technical committee 100: Audio, video and multimedia systems and equipment.

This first edition, together with IEC 60958-4-1 and IEC 60958-4-4, cancels and replaces IEC 60958-4 published in 2003 and its Amendment 1:2008 and constitutes a technical revision.

This edition includes the following significant technical changes with respect to IEC 60958-4:2003 with its Amendment 1:2008:

a) support for a wider range of physical media;

b) support for a wider range of audio sampling frequencies;

c) deprecation of "minimum implementation" of channel status data.

Documents
Document Sharing Hub

Full document details: IEC 60958-4-2 2016

The text of this standard is based on the following documents:

| CDV | Report on voting |
|---|---|
| 100/2453/CDV | 100/2582/RVC |

Full information on the voting for the approval of this standard can be found in the report on voting indicated in the above table.

A list of all parts in the IEC 60958 series, published under the general title *Digital audio interface*, can be found on the IEC website.

This publication has been drafted in accordance with the ISO/IEC Directives, Part 2.

The committee has decided that the contents of this publication will remain unchanged until the stability date indicated on the IEC website under "http://webstore.iec.ch" in the data related to the specific publication. At this date, the publication will be

- reconfirmed,
- withdrawn,
- replaced by a revised edition, or
- amended.

Documents
Document Sharing Hub

Full document details: IEC 60958-4-2 2016

# INTRODUCTION

The two-channel digital audio interface has been widely used in a variety of professional audio applications that have reached beyond the vision of the original standard. In particular, applications using increased sampling frequencies and alternative physical media.

Separating the standard into independently-maintainable parts allows, for example, additional transmission media to be introduced in the future by revising IEC 60958-4-4 without affecting the other parts of the IEC 60958-4 series. The parts comprise:

Part 4-1: Audio content: defines the format for coding audio used for the audio content. It specifies the semantics of the audio data, including the "validity" flag. It also specifies the sampling frequency by reference to AES5.

Part 4-2: Metadata and subcode: specifies the format for information, metadata, or subcode transmitted with the audio data: principally the "channel status" but also user data and the auxiliary bits. Implementors will note that the current implementation options ("Standard" and "Enhanced") both require that status data be implemented correctly in compliant equipment.

Part 4-4: Physical and electrical parameters: specifies the physical signals that convey the bit stream specified in IEC 60958-1. The transport format is intended for use with shielded twisted-pair cable of conventional design over distances of up to 100 m at frame rates of up to 50 kHz. Longer cable lengths and higher frame rates may be used, but with a rapidly increasing requirement for care in cable selection and possible receiver equalization, or the use of active repeaters. Provision is made in this standard for adapting the balanced terminals to use 75 Ω coaxial cable. Transmission by fibre-optic cable is under consideration.

Documents
Document Sharing Hub

Full document details: IEC 60958-4-2 2016

# DIGITAL AUDIO INTERFACE –

# Part 4-2: Professional applications – Metadata and subcode

## 1 Scope

This part of IEC 60958 specifies the format for coding metadata, or subcode, that relates to the audio content and is carried with it. This part of IEC 60958, together with IEC 60958-1, IEC 60958-4-1, and IEC 60958-4-4, specifies an interface for serial digital transmission of two channels of periodically sampled and linearly represented digital audio data from one transmitter to one receiver.

## 2 Normative references

The following documents, in whole or in part, are normatively referenced in this document and are indispensable for its application. For dated references, only the edition cited applies. For undated references, the latest edition of the referenced document (including any amendments) applies.

IEC 60958-1:2008, *Digital audio interface – Part 1: General*
IEC 60958-1:2008/AMD1:2014

IEC 60958-3, *Digital audio interface – Part 3: Consumer applications*

IEC 60958-4-1, *Digital audio interface – Part 4-1: Professional applications – Audio content*

IEC 60958-4-4, *Digital audio interface – Part 4-4: Professional applications – Physical and electrical parameters*

ISO 646, *Information technology – ISO 7-bit coded character set for information interchange*

ITU-R Recommendation BS.450, *Transmission standards for FM sound broadcasting at VHF*[1]

ITU-T Recommendation J.17, *Pre-emphasis used on sound program circuits*

## 3 Terms, definitions and abbreviations

### 3.1 Terms and definitions

For the purposes of this document, the terms and definitions given in IEC 60958-1 and the following apply.

**3.1.1**
**channel status**
bits carrying, in a fixed format aligned with the block, specified in IEC 60958-1, information associated with each audio channel which is decodable by any interface user

[1] Previously CCIR Recommendation 450-1.

Documents
Document Sharing Hub

Full document details: IEC 60958-4-2 2016

**3.1.2**
**metadata**
information relating to the audio content in the same channel

**3.1.3**
**subframe**
smallest structural element in a digital audio interface transport stream, carrying one PCM sample and ancillary information

Note 1 to entry: The format of a subframe is specified in 4.1.1 of IEC 60958-1:2008.

### 3.2 Abbreviations

DARS Digital Audio Reference Signal

IRV International Reference Version

## 4 User data format

One bit of user data may be carried in each subframe. Different user data may be carried in each channel and may be related to the associated audio or not. Its capacity in kbit/s is therefore equal to the sampling frequency in use, in kilosamples/s, for each channel.

User data bits may be used in any way desired by the user.

Known possible formats for the user data channel are indicated by the channel status byte 1, bits 4 to 7.

Other possible formats may be used and may or may not be standardized in future.

The default value of the user data bit is logic 0.

## 5 Channel status format

### 5.1 Channel status bit

One bit of channel status data shall be carried in each sub-frame. Different channel status data may be carried in each channel. Their capacity in kbit/s is therefore equal to the sampling frequency in use, in kilosamples/s.

NOTE The channel status for each audio signal carries information associated with that audio signal, and thus it is possible for different channel status data to be carried in the two subframes of the digital audio signal. Examples of information to be carried in the channel status are: length of audio sample words, number of audio channels, sampling frequency, sample address code, alphanumeric source and destination codes, and emphasis.

### 5.2 Channel status block

Channel status information shall be organized in 192-bit blocks, subdivided into 8-bit bytes numbered from 0 to 23. The transmission format shall mark every 192$^{nd}$ frame to show that it carries the first bit of a block. Within each byte, the bits are numbered from 0 to 7, 0 being the first bit transmitted, so bit 0 of byte 0 is the first bit in the block. Where a byte holds a numerical value, bit 0 is the least significant bit.

NOTE In IEC 60958-1, the frame that begins with preamble Z contains the first bit of a block in both channels. In other transports (for example AES10 and IEC 62365) a block start flag is used to mark the first subframe in a block, and may be applied to each channel independently.

Documents
Document Sharing Hub
Full document details: IEC 60958-4-2 2016

## 5.3 Implementation

### 5.3.1 Implementation levels

#### 5.3.1.1 General

The following two implementations are defined: standard and enhanced. These terms are used to communicate in a simple manner the level of implementation of the interface transmitter involving the many features of channel status. Irrespective of the level of implementation, all reserved states of bits defined in 5.5 shall remain unchanged.

#### 5.3.1.2 Standard level

The standard implementation provides a fundamental level of implementation which should prove sufficient for general applications in professional audio or broadcasting. In standard implementation, transmitters shall correctly encode and transmit all channel status bits in byte 0, byte 1, byte 2, and byte 23 (CRCC) in the manner specified in this standard.

NOTE This note applies to the French language only.

#### 5.3.1.3 Enhanced level

In addition to conforming to the requirements described in 5.3.1.2 for the standard implementation, the enhanced implementation shall provide further capabilities.

### 5.3.2 Transmitter requirement

Transmitters shall encode channel status to follow all the formatting and channel coding rules to one of the two specified implementation levels. All transmitters shall correctly encode and transmit channel status with the correct juxtaposition with respect to the Z preamble or block start (see IEC 60958-1).

### 5.3.3 Receiver requirement

Receivers shall decode channel status as required by their application. Receivers shall interpret CRCC errors as needing to reject the channel status block with the error. Receivers shall not interpret any errors in a channel status block such as CRCC or block length errors as a reason to mute or alter the audio content.

The purpose of the CRCC in byte 23 is to indicate corruption of the channel status block due to switching or editing effects (for example). Due consideration should be given to the implications of any action on downstream equipment and the associated system in general.

## 5.4 Documentation

Documentation shall be provided describing the channel status features supported by interface transmitters and receivers.

To promote compatible operation between items of equipment built to this standard it is necessary to establish which information bits and operational bits shall be encoded and sent by a transmitter and decoded by an interface receiver.

## 5.5 Channel status content

### 5.5.1 General

The specific organization is presented in Figure 1. Multiple-bit quantities are shown in the tables with the most significant bit to the left. Note that the order in which the bits are transmitted is therefore from right to left.

Documents
Document Sharing Hub

Full document details: IEC 60958-4-2 2016

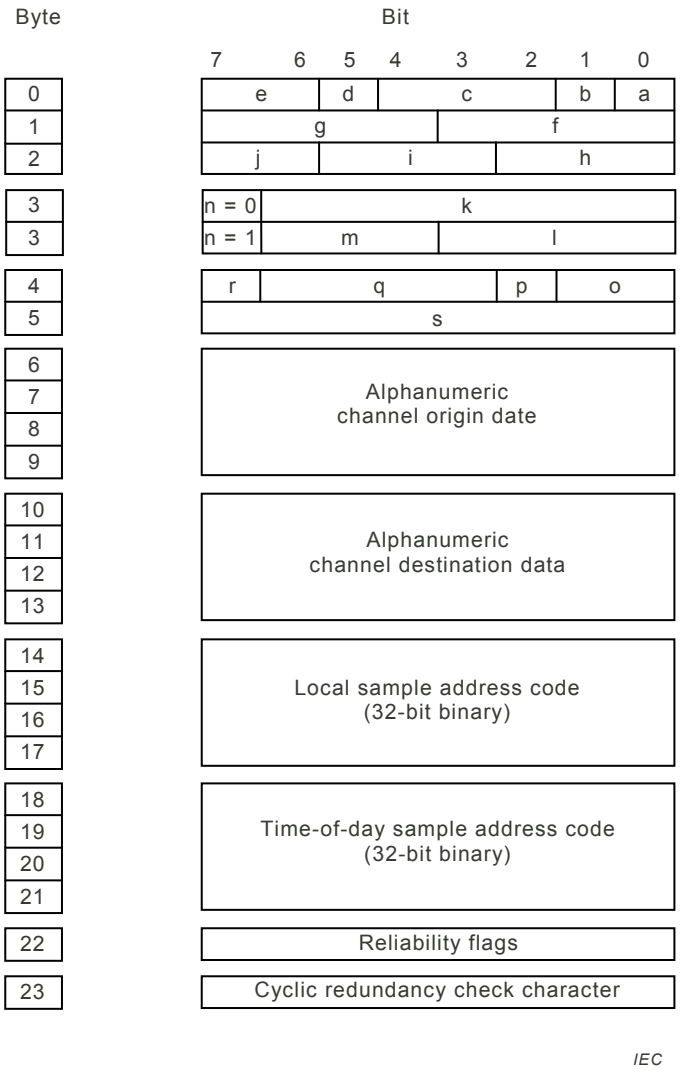


**Key**

a Use of channel status block
b Linear PCM identification
c Audio signal pre-emphasis
d Lock indication
e Sampling frequency
f Channel mode
g User bits management
h Use of auxiliary sample bits
i Source word length
j Indication of alignment level
k Channel number
l Channel number
m Multichannel mode number
n Multichannel mode
o Digital audio reference signal
p Reserved but undefined
q Sampling frequency
r Sampling frequency scaling flag
s Reserved but undefined

**Figure 1 – Channel status data format**

Documents
Document Sharing Hub
Full document details: IEC 60958-4-2 2016

### 5.5.2 Byte 0: Basic audio parameters

| Bit | 0 | Use of channel status block. |
|---|---|---|
| state | 0 | Consumer use of channel status block. [a] |
| | 1 | Professional use of channel status block. |

[a] The significance of byte 0, bit 0 is such that a transmission from an interface conforming to IEC 60958-3 consumer use can be identified, and a receiver conforming only to IEC 60958-3 consumer use will correctly identify a transmission from a professional-use interface as defined in this standard. Connection of a professional-use transmitter with a consumer-use receiver or vice versa might result in unpredictable operation. Thus, the following byte definitions only apply when bit 0 = logic 1 (professional use of the channel status block).

| Bit | 1 | Linear PCM identification |
|---|---|---|
| state | 0 | Audio sample word represents linear PCM samples. |
| | 1 | Audio sample word used for purposes other than linear PCM samples. |

| Bits | 4 3 2 | Audio signal emphasis |
|---|---|---|
| states | 0 0 0 | Emphasis not indicated. Receiver defaults to no emphasis with manual override enabled. |
| | 0 0 1 | No emphasis. Receiver manual override is disabled. |
| | 0 1 1 | 50 µs + 15 µs emphasis, see ITU-R BS.450. Receiver manual override is disabled. |
| | 1 1 1 | ITU-T J.17 emphasis (with 6,5 dB insertion loss at 800 Hz). Receiver manual override is disabled |
| | All other states of bits 2 to 4 are reserved and are not to be used until further defined. | |

| Bit | 5 | Lock indication |
|---|---|---|
| state | 0 | Default. Lock condition not indicated. |
| | 1 | Source sampling frequency unlocked. |

| Bits | 7 6 | Sampling frequency |
|---|---|---|
| states | 0 0 | Sampling frequency not indicated. Receiver default to interface frame rate and manual override or auto set is enabled. |
| | 1 0 | 48-kHz sampling frequency. Manual override or auto set is disabled. |
| | 0 1 | 44,1-kHz sampling frequency. Manual override or auto set is disabled. |
| | 1 1 | 32-kHz sampling frequency. Manual override or auto set is disabled. |

The following considerations for basic audio parameters have to be taken into account.

- The indication that the audio sample words are not in linear PCM form requires that the validity bit be set for that channel. See 5.6 and IEC 60958-4-1.
- The indication of sampling frequency, or the use of one of the sampling frequencies that can be indicated in this byte, is not a requirement for operation of the interface. The 00 state of bits 6 to 7 may be used if the transmitter does not support the indication of sampling frequency, the sampling frequency is unknown, or the sample frequency is not one of those that can be indicated in this byte. In the latter case for some sampling frequencies byte 4 may be used to indicate the correct value.
- When byte 1, bits 1 to 3 indicate single channel double sampling frequency mode then the sampling frequency of the audio signal is twice that indicated by bits 6 to 7 of byte 0.

Documents
Document Sharing Hub
Full document details: IEC 60958-4-2 2016

### 5.5.3 Byte 1: Channel modes, user bits management

| Bits | 3 2 1 0 | Channel mode |
|---|---|---|
| states | 0 0 0 0 | Mode not indicated. Receiver default to two-channel mode. Manual override is enabled. |
| | 1 0 0 0 | Two-channel mode. Manual override is disabled. |
| | 0 1 0 0 | Single-channel mode (monophonic). Manual override is disabled. |
| | 1 1 0 0 | Primary-secondary mode, subframe 1 is primary. Manual override is disabled. |
| | 0 0 1 0 | Stereophonic mode, channel 1 is left channel. Manual override is disabled |
| | 1 0 1 0 | Reserved for user-defined applications. |
| | 0 1 1 0 | Reserved for user-defined applications. |
| | 1 1 1 0 | Single channel double sampling frequency mode. Sub-frames 1 and 2 carry successive samples of the same signal. The sampling frequency of the signal is double the frame rate, and is double the sampling frequency indicated in byte 0, but not double the rate indicated in byte 4, if that is used. Manual override is disabled. Vector to byte 3 for channel identification. |
| | 0 0 0 1 | Single channel double sampling frequency mode – stereo mode left. Sub-frames 1 and 2 carry successive samples of the same signal. The sampling frequency of the signal is double the frame rate, and is double the sampling frequency indicated in byte 0, but not double the rate indicated in byte 4, if that is used. Manual override is disabled. |
| | 1 0 0 1 | Single channel double sampling frequency mode – stereo mode right. Sub-frames 1 and 2 carry successive samples of the same signal. The sampling frequency of the signal is double the frame rate, and is double the sampling frequency indicated in byte 0, but not double the rate indicated in byte 4, if that is used. Manual override is disabled. |
| | 1 1 1 1 | Multichannel mode. Vector to byte 3 for channel identification. |
| | All other states of bits 0 to 3 are reserved and are not to be used until further defined. | |

| Bits | 7 6 5 4 | User bits management |
|---|---|---|
| states | 0 0 0 0 | Default, no user information is indicated. |
| | 1 0 0 0 | 192-bit block structure with user-defined content. Block start aligned with channel status block start. |
| | 0 1 0 0 | Reserved for the AES18 standard. |
| | 1 1 0 0 | User defined. |
| | 0 0 1 0 | User data conforms to the general user data format defined in IEC 60958-3. |
| | 1 0 1 0 | 192-bit block structure as specified in AES52. Block start aligned with channel status block start. |
| | 0 1 1 0 | Reserved for IEC 62537. |
| | All other states of bits 4 to 7 are reserved and are not to be used until further defined. | |

### 5.5.4 Byte 2: Auxiliary bits, word length and alignment level

| Bits | 2 1 0 | Use of auxiliary bits |
|---|---|---|
| states | 0 0 0 | Maximum audio sample word length is 20 bit (default). Use of auxiliary bits not defined. |
| | 1 0 0 | Maximum audio sample word length is 24 bit. Auxiliary bits are used for main audio sample data. |
| | 0 1 0 | Maximum audio sample word length is 20 bit. Auxiliary bits in this channel are used to carry a single coordination signal. [a] |
| | 1 1 0 | Reserved for user defined applications. |
| | All other states of bits 0 to 2 are reserved and are not to be used until further defined | |

[a] The signal coding used for the coordination channel is described in Annex B.

AVA Documents
Document Sharing Hub
Full document details: IEC 60958-4-2 2016

| Bits | 5 4 3 | Encoded audio sample word length of transmitted signal [a, b, c] | |
|---|---|---|---|
| | | Audio sample word length if maximum length is 24 bit as indicated by bits 0 to 2 above. | Audio sample word length if maximum length is 20 bit as indicated by bits 0 to 2 above. |
| states | 0 0 0 | Word length not indicated (default). | Word length not indicated (default). |
| | 1 0 0 | 23 bit | 19 bit |
| | 0 1 0 | 22 bit | 18 bit |
| | 1 1 0 | 21 bit | 17 bit |
| | 0 0 1 | 20 bit | 16 bit |
| | 1 0 1 | 24 bit | 20 bit |
| | All other states of bits 3 to 5 are reserved and are not to be used until further defined. | | |

[a] The default state of bits 3 to 5 indicates that the number of active bits within the 20-bit or 24-bit coding range is not specified by the transmitter. The receiver should default to the maximum number of bits specified by the coding range and enable manual override or automatic set.

[b] The nondefault states of bits 3 to 5 indicate the number of bits within the 20-bit or 24-bit coding range which might be active. This is also an indirect expression of the number of LSBs that are certain to be inactive, which is equal to 20 or 24 minus the number corresponding to the bit state.

[c] Irrespective of the audio sample word length as indicated by any of the states of bits 3 to 5, the MSB is in time slot 27 of the transmitted subframe as specified in IEC 60958-1:2008, 4.1.1.

| Bits | 7 6 | Indication of alignment level |
|---|---|---|
| states | 0 0 | Alignment level not indicated |
| | 1 0 | Alignment to SMPTE RP155, alignment level is 20 dB below maximum code. |
| | 0 1 | Alignment to EBU R68, alignment level is 18,06 dB below maximum code. |
| | 1 1 | Reserved for future use. |

### 5.5.5 Byte 3: Multichannel modes

| Bit | 7 | Multichannel mode |
|---|---|---|
| state | 0 | Undefined multichannel mode (default) |
| | 1 | Defined multichannel modes |

The definition of the remaining bit states depends on the state of bit 7.

EITHER

| Bits | 6 to 0 | Channel number, when byte 3 bit 7 is 0 |
|---|---|---|
| value | The channel number is the numeric value of the byte, plus one, with bit 0 as the least significant bit. | |

Documents
Document Sharing Hub
Full document details: IEC 60958-4-2 2016

OR

| Bits | 6 5 4 | Multichannel mode, when byte 3 bit 7 is 1 |
|---|---|---|
| states<br>note:<br>LSB<br>first | 0 0 0 | Multichannel mode 0. The channel number is defined by bits 3 to 0 of this byte. |
| | 0 0 1 | Multichannel mode 1. The channel number is defined by bits 3 to 0 of this byte. |
| | 0 1 0 | Multichannel mode 2. The channel number is defined by bits 3 to 0 of this byte. |
| | 0 1 1 | Multichannel mode 3. The channel number is defined by bits 3 to 0 of this byte. |
| | 1 1 1 | User-defined multichannel mode. The channel number is defined by bits 3 to 0 of this byte. |
| | All other states of bits 6 to 4 are reserved and are not to be used until further defined. | |

| Bits | 3 to 0 | Channel number, when byte 3 bit 7 is 1 |
|---|---|---|
| value | The channel number is the numeric value of these four bits, plus one, with bit 0 as the least significant bit. | |

The following considerations for multichannel modes have to be taken into account.

- The defined multichannel modes identify mappings between channel numbers and function. Some mappings may involve groupings of up to 32 channels by combining two modes.
- For compatibility with equipment that is only sensitive to the channel status data in one subframe the channel carried by subframe 2 may indicate the same channel number as channel 1. In that case, it is implicit that the second channel has a number one higher than the channel of subframe 1 except in single channel double sampling frequency mode.

### 5.5.6 Byte 4: DARS, hidden information, multiple-rate sampling frequencies

| Bits | 1 0 | Digital audio reference signal |
|---|---|---|
| states | 0 0 | Not a reference signal (default). |
| | 1 0 | Grade 1 reference signal – see AES11. |
| | 0 1 | Grade 2 reference signal – see AES11. |
| | 1 1 | Reserved and not to be used until further defined. |

| Bit | 2 | Information hidden in PCM signal |
|---|---|---|
| | 0 | No indication (default). |
| | 1 | Audio sample word contains additional information in the least significant bits (see AES55). |

Documents
Document Sharing Hub
Full document details: IEC 60958-4-2 2016