IEC 60966-2-1

Edition 4.0 2024-03

INTERNATIONAL STANDARD

NORME INTERNATIONALE

colour inside

Radio frequency and coaxial cable assemblies – Part 2-1: Sectional specification for flexible coaxial cable assemblies

Cordons coaxiaux et cordons pour fréquences radioélectriques – Partie 2-1: Spécification intermédiaire pour cordons coaxiaux souples

Documents
Document Sharing Hub

IEC 60966-2-1:2024-03(en-fr)

Full document details: IEC 60966-2-1-2024

THIS PUBLICATION IS COPYRIGHT PROTECTED
Copyright © 2024 IEC, Geneva, Switzerland

All rights reserved. Unless otherwise specified, no part of this publication may be reproduced or utilized in any form or by any means, electronic or mechanical, including photocopying and microfilm, without permission in writing from either IEC or IEC's member National Committee in the country of the requester. If you have any questions about IEC copyright or have an enquiry about obtaining additional rights to this publication, please contact the address below or your local IEC member National Committee for further information.

Droits de reproduction réservés. Sauf indication contraire, aucune partie de cette publication ne peut être reproduite ni utilisée sous quelque forme que ce soit et par aucun procédé, électronique ou mécanique, y compris la photocopie et les microfilms, sans l'accord écrit de l'IEC ou du Comité national de l'IEC du pays du demandeur. Si vous avez des questions sur le copyright de l'IEC ou si vous désirez obtenir des droits supplémentaires sur cette publication, utilisez les coordonnées ci-après ou contactez le Comité national de l'IEC de votre pays de résidence.

IEC Secretariat
3, rue de Varembé
CH-1211 Geneva 20
Switzerland

Tel.: +41 22 919 02 11
info@iec.ch
www.iec.ch

About the IEC
The International Electrotechnical Commission (IEC) is the leading global organization that prepares and publishes International Standards for all electrical, electronic and related technologies.

About IEC publications
The technical content of IEC publications is kept under constant review by the IEC. Please make sure that you have the latest edition, a corrigendum or an amendment might have been published.

IEC publications search - webstore.iec.ch/advsearchform
The advanced search enables to find IEC publications by a variety of criteria (reference number, text, technical committee, …). It also gives information on projects, replaced and withdrawn publications.

IEC Just Published - webstore.iec.ch/justpublished
Stay up to date on all new IEC publications. Just Published details all new publications released. Available online and once a month by email.

IEC Customer Service Centre - webstore.iec.ch/csc
If you wish to give us your feedback on this publication or need further assistance, please contact the Customer Service Centre: sales@iec.ch.

IEC Products & Services Portal - products.iec.ch
Discover our powerful search engine and read freely all the publications previews, graphical symbols and the glossary. With a subscription you will always have access to up to date content tailored to your needs.

Electropedia - www.electropedia.org
The world's leading online dictionary on electrotechnology, containing more than 22 500 terminological entries in English and French, with equivalent terms in 25 additional languages. Also known as the International Electrotechnical Vocabulary (IEV) online.

A propos de l'IEC
La Commission Electrotechnique Internationale (IEC) est la première organisation mondiale qui élabore et publie des Normes internationales pour tout ce qui a trait à l'électricité, à l'électronique et aux technologies apparentées.

A propos des publications IEC
Le contenu technique des publications IEC est constamment revu. Veuillez vous assurer que vous possédez l'édition la plus récente, un corrigendum ou amendement peut avoir été publié.

Recherche de publications IEC - webstore.iec.ch/advsearchform
La recherche avancée permet de trouver des publications IEC en utilisant différents critères (numéro de référence, texte, comité d'études, …). Elle donne aussi des informations sur les projets et les publications remplacées ou retirées.

IEC Just Published - webstore.iec.ch/justpublished
Restez informé sur les nouvelles publications IEC. Just Published détaille les nouvelles publications parues. Disponible en ligne et une fois par mois par email.

Service Clients - webstore.iec.ch/csc
Si vous désirez nous donner des commentaires sur cette publication ou si vous avez des questions contactez-nous: sales@iec.ch.

IEC Products & Services Portal - products.iec.ch
Découvrez notre puissant moteur de recherche et consultez gratuitement tous les aperçus des publications, symboles graphiques et le glossaire. Avec un abonnement, vous aurez toujours accès à un contenu à jour adapté à vos besoins.

Electropedia - www.electropedia.org
Le premier dictionnaire d'électrotechnologie en ligne au monde, avec plus de 22 500 articles terminologiques en anglais et en français, ainsi que les termes équivalents dans 25 langues additionnelles. Egalement appelé Vocabulaire Electrotechnique International (IEV) en ligne.

Documents
Document Sharing Hub

Full document details: IEC 60966-2-1-2024

IEC 60966-2-1

Edition 4.0 2024-03

INTERNATIONAL STANDARD

NORME INTERNATIONALE

colour inside

Radio frequency and coaxial cable assemblies – Part 2-1: Sectional specification for flexible coaxial cable assemblies

Cordons coaxiaux et cordons pour fréquences radioélectriques – Partie 2-1: Spécification intermédiaire pour cordons coaxiaux souples

INTERNATIONAL
ELECTROTECHNICAL
COMMISSION

COMMISSION
ELECTROTECHNIQUE
INTERNATIONALE

ICS 33.120.10

ISBN 978-2-8322-8412-4

Warning! Make sure that you obtained this publication from an authorized distributor.
Attention! Veuillez vous assurer que vous avez obtenu cette publication via un distributeur agréé.

Documents
Document Sharing Hub

® Registered trademark of the International Electrotechnical Commission
Marque déposée de la Commission Electrotechnique Internationale

Full document details: IEC 60966-2-1-2024

CONTENTS

FOREWORD 4
1 Scope 6
2 Normative references 6
3 Terms and definitions 6
4 Design and construction 7
4.1 Cable design and construction 7
4.2 Connector design and construction 7
4.3 The relative position dimensions of the interface 7
4.4 Outline of the cable assembly 7
5 Workmanship, marking and packaging 8
6 IEC type designation 9
7 Standard rating and characteristics 10
7.1 Nominal characteristic impedance 10
7.2 Temperature range 10
7.3 Bending radius 10
7.3.1 Static bending radius 10
7.3.2 Dynamic bending radius 10
7.4 Rated operating frequency range 10
7.5 Rated working voltage 10
7.6 Rated power 11
8 Requirements of finished cable assemblies 11
8.1 General 11
8.2 Electrical requirements 11
8.3 Mechanical requirements 13
8.4 Environmental requirements 15
9 Quality management 17
10 Test schedules 17
10.1 Qualification test 17
10.2 Acceptance tests 18
10.3 Periodic tests 19
Annex A (normative) The relative position dimensions of the interface of some typical connectors 21
Annex B (normative) Shaking test method 24
B.1 Purpose 24
B.2 Test equipment 24
B.3 Test procedure 24
B.4 Requirements 25
B.5 Test report 25
Annex C (normative) Preferred arrangement for vibrations, shocks test 26

Figure 1 – Length definition of cable assemblies with two connectors 8
Figure 2 – Length definition of cable assemblies with one connector 8
Figure 3 – The marking example of a cable assembly 9
Figure A.1 – The relative position dimensions of the interface of some typical connectors 22

AVA Documents
Document Sharing Hub

Full document details: IEC 60966-2-1-2024

Figure B.1 – Schematic diagram of shaking test 24
Figure C.1 – Preferred arrangement for vibrations, shocks test 26

Table 1 – Rated temperature of cable assemblies with flexible cables 10
Table 2 – Electrical requirements 11
Table 3 – Mechanical requirements 13
Table 4 – Environmental requirements 15
Table 5 – Qualification test 17
Table 6 – Acceptance test 18
Table 7 – Sampling plan 19
Table 8 – Periodic test 19
Table A.1 – The dimensions of A and B in Figure A.1 23

Documents
Document Sharing Hub

Full document details: IEC 60966-2-1-2024

INTERNATIONAL ELECTROTECHNICAL COMMISSION

RADIO FREQUENCY AND COAXIAL CABLE ASSEMBLIES –

Part 2-1: Sectional specification for flexible coaxial cable assemblies

FOREWORD

1) The International Electrotechnical Commission (IEC) is a worldwide organization for standardization comprising all national electrotechnical committees (IEC National Committees). The object of IEC is to promote international co-operation on all questions concerning standardization in the electrical and electronic fields. To this end and in addition to other activities, IEC publishes International Standards, Technical Specifications, Technical Reports, Publicly Available Specifications (PAS) and Guides (hereafter referred to as "IEC Publication(s)"). Their preparation is entrusted to technical committees; any IEC National Committee interested in the subject dealt with may participate in this preparatory work. International, governmental and non-governmental organizations liaising with the IEC also participate in this preparation. IEC collaborates closely with the International Organization for Standardization (ISO) in accordance with conditions determined by agreement between the two organizations.
2) The formal decisions or agreements of IEC on technical matters express, as nearly as possible, an international consensus of opinion on the relevant subjects since each technical committee has representation from all interested IEC National Committees.
3) IEC Publications have the form of recommendations for international use and are accepted by IEC National Committees in that sense. While all reasonable efforts are made to ensure that the technical content of IEC Publications is accurate, IEC cannot be held responsible for the way in which they are used or for any misinterpretation by any end user.
4) In order to promote international uniformity, IEC National Committees undertake to apply IEC Publications transparently to the maximum extent possible in their national and regional publications. Any divergence between any IEC Publication and the corresponding national or regional publication shall be clearly indicated in the latter.
5) IEC itself does not provide any attestation of conformity. Independent certification bodies provide conformity assessment services and, in some areas, access to IEC marks of conformity. IEC is not responsible for any services carried out by independent certification bodies.
6) All users should ensure that they have the latest edition of this publication.
7) No liability shall attach to IEC or its directors, employees, servants or agents including individual experts and members of its technical committees and IEC National Committees for any personal injury, property damage or other damage of any nature whatsoever, whether direct or indirect, or for costs (including legal fees) and expenses arising out of the publication, use of, or reliance upon, this IEC Publication or any other IEC Publications.
8) Attention is drawn to the Normative references cited in this publication. Use of the referenced publications is indispensable for the correct application of this publication.
9) IEC draws attention to the possibility that the implementation of this document may involve the use of (a) patent(s). IEC takes no position concerning the evidence, validity or applicability of any claimed patent rights in respect thereof. As of the date of publication of this document, IEC had not received notice of (a) patent(s), which may be required to implement this document. However, implementers are cautioned that this may not represent the latest information, which may be obtained from the patent database available at https://patents.iec.ch. IEC shall not be held responsible for identifying any or all such patent rights.

IEC 60966-2-1 has been prepared by IEC technical committee 46: Cables, wires, waveguides, RF connectors, RF and microwave passive components and accessories. It is an International Standard.

This fourth edition cancels and replaces the third edition published in 2008. This edition constitutes a technical revision.

This edition includes the following significant technical changes with respect to the previous edition:

a) added Figure 2;
b) added Clause 6 "IEC type designation";
c) modified Figure 3;
d) added Clause 7 "Rating and characteristics";

Documents
Document Sharing Hub

e) added "Requirements/Remarks" to all the tests in Clause 8;

f) added "Insertion loss difference", "Corona extinction voltage" and "Shaking test" in Table 2;

g) added "Impact test" in Table 3;

h) changed "Vibrations, bumps and shocks test" to "Vibrations, shocks test" in Table 3;

i) added Annex A, Annex B and Annex C.

The text of this International Standard is based on the following documents:

Draft	Report on voting
46/966/FDIS	46/996/RVD

Full information on the voting for its approval can be found in the report on voting indicated in the above table.

The language used for the development of this International Standard is English.

This document was drafted in accordance with ISO/IEC Directives, Part 2, and developed in accordance with ISO/IEC Directives, Part 1 and ISO/IEC Directives, IEC Supplement, available at www.iec.ch/members_experts/refdocs. The main document types developed by IEC are described in greater detail at www.iec.ch/publications.

A list of all parts in the IEC 60966, published under the general title *Radio frequency and coaxial cable assemblies*, can be found on the IEC website.

The committee has decided that the contents of this document will remain unchanged until the stability date indicated on the IEC website under webstore.iec.ch in the data related to the specific document. At this date, the document will be

- reconfirmed,
- withdrawn, or
- revised.

IMPORTANT – The "colour inside" logo on the cover page of this document indicates that it contains colours which are considered to be useful for the correct understanding of its contents. Users should therefore print this document using a colour printer.

Documents
Document Sharing Hub

Full document details: IEC 60966-2-1-2024

RADIO FREQUENCY AND COAXIAL CABLE ASSEMBLIES –

Part 2-1: Sectional specification for flexible coaxial cable assemblies

1 Scope

This part of IEC 60966 is a sectional specification that relates to flexible RF coaxial cable assemblies operating in the transverse electromagnetic mode (TEM). It establishes uniform requirements for testing the electrical, mechanical and climatic properties of flexible cable assemblies composed of flexible RF coaxial cables and RF coaxial connectors.

This part of IEC 60966 applies to flexible cable assemblies composed of flexible RF coaxial cables and coaxial connectors. Flexible RF cable assemblies are widely used in mobile communication systems, microwave test equipment, radar, aerospace and other fields.

NOTE 1 For the purposes of this sectional specification, a cable assembly is always regarded as an integral unit. All specifications apply to the finished assembly and not to individual and non-assembled parts thereof.

NOTE 2 This sectional specification can be supplemented with detail specifications giving additional details as required by the particular application. This application will not necessarily require all tests.

2 Normative references

The following documents are referred to in the text in such a way that some or all of their content constitutes requirements of this document. For dated references, only the edition cited applies. For undated references, the latest edition of the referenced document (including any amendments) applies.

IEC 60966-1:2019, *Radio frequency and coaxial cable assemblies – Part 1: Generic specification – General requirements and test methods*

IEC 61169 (all parts), *Radio frequency connectors*

IEC 61196-1-126, *Coaxial communication cables – Part 1-126: Electrical test methods – Corona extinction voltage*

IEC 61196-9, *Coaxial communication cables − Part 9: Sectional specification for flexible RF coaxial cables*

3 Terms and definitions

For the purposes of this document, the definitions given in IEC 60966-1:2019 apply.

ISO and IEC maintain terminology databases for use in standardization at the following addresses:

- IEC Electropedia: available at https://www.electropedia.org/
- ISO Online browsing platform: available at https://www.iso.org/obp

Documents
Document Sharing Hub

Full document details: IEC 60966-2-1-2024

4 Design and construction

4.1 Cable design and construction

Cables should conform to IEC 61196-9 and its related detail specifications. Where cable designs deviating from these publications are required, they shall comply with the requirements of the relevant detail specification.

When required, the manufacturer can use additional protective tubing or cable deviating from IEC 61196-9, in order to comply with the requirements of the relevant detail specification.

The materials used in the cable shall be given as engineering information in the relevant detail specification.

4.2 Connector design and construction

Connectors should conform to the IEC 61169 series. Where connector designs deviating from the IEC 61169 series are required, the interface should conform to the relevant part of IEC 61169 where available and shall comply with the requirements of the relevant detail specification.

The materials used in the connector shall be given as engineering information in the relevant detail specification.

4.3 The relative position dimensions of the interface

The relative position dimensions of the interface of end connector(s) of the cable assemblies shall comply with the interface of the relevant part of IEC 61169 or the relevant detail specification. The relative position dimensions of the interface of end connector(s) include the dimension of inner conductor relative to dielectric and inner conductor relative to outer conductor.

The relative position dimensions of the interface of some typical connectors are shown in Annex A.

4.4 Outline of the cable assembly

The outline shall be in accordance with the relevant detail specification of the cable assembly.

The length, unless otherwise specified in the relevant detail specification, is defined as between the reference planes of the connectors. In the case of right-angle connectors, the length applies to the axis of the connectors (see Figure 1 and Figure 2).

If not indicated in the relevant detail specification, the length tolerance shall be ±1 % for cables equal to, or longer than, 300 mm and ±3 mm for cables shorter than 300 mm.

Documents
Document Sharing Hub
Full document details: IEC 60966-2-1-2024

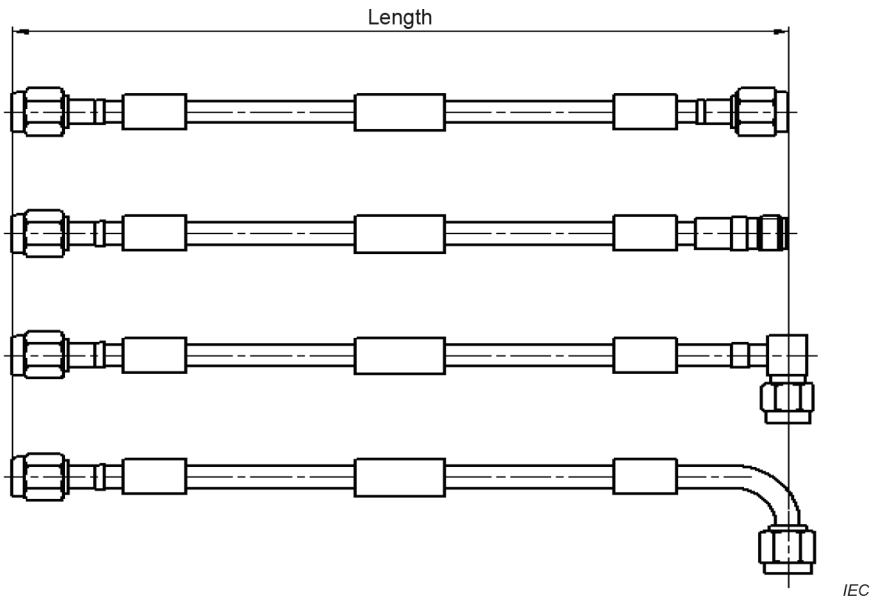

Figure 1 – Length definition of cable assemblies with two connectors

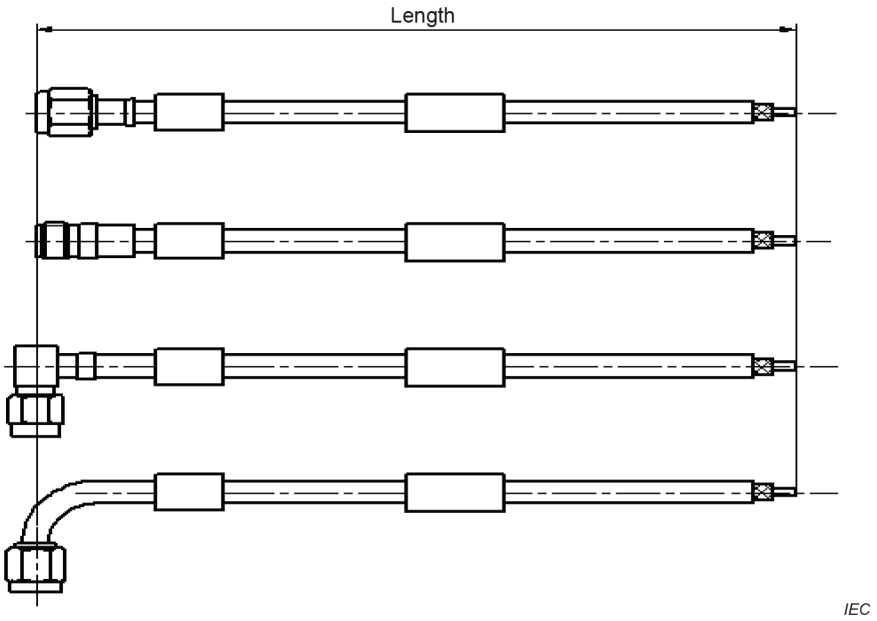

Figure 2 – Length definition of cable assemblies with one connector

5 Workmanship, marking and packaging

IEC 60966-1:2019, Clause 5 and the following paragraph applies:

Cable assemblies made in accordance with this sectional specification comprise a section of cable and two connectors (see Figure 1). Occasionally, the cable assembly will comprise only a cable and one connector (see Figure 2). When specified in the relevant detail specification, the assembly may additionally include markers for identification of the assembly and interconnecting ends. End caps and other accessories may also be specified (see Figure 3).

Documents
Document Sharing Hub
Full document details: IEC 60966-2-1-2024

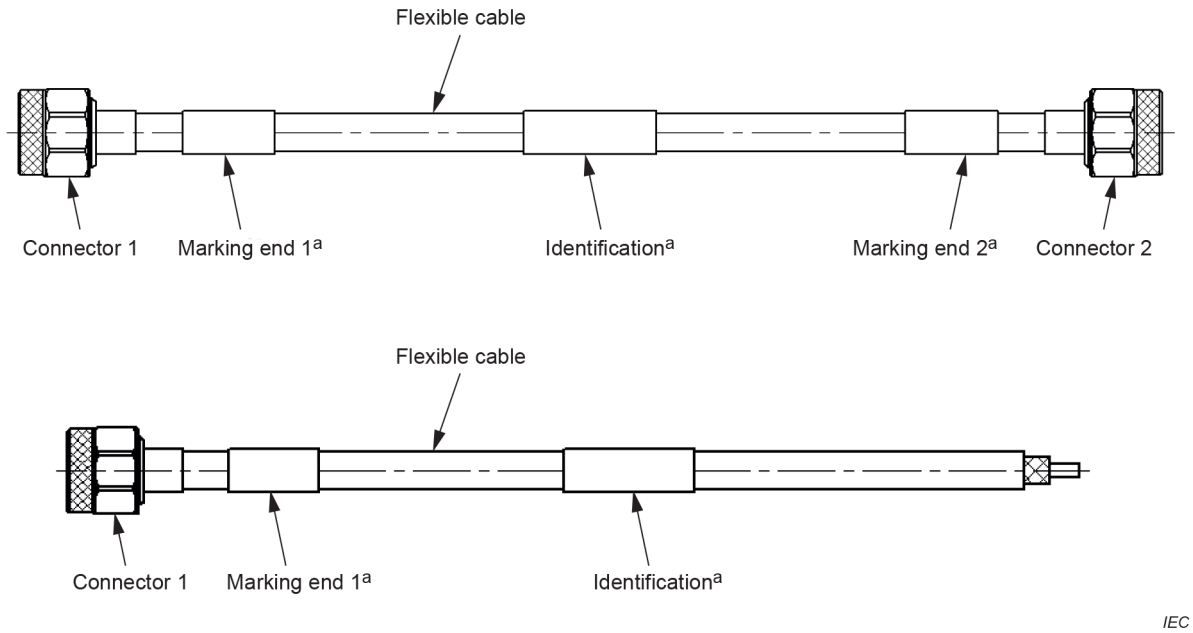

a When specified

Figure 3 – The marking example of a cable assembly

6 IEC type designation

IEC type designation of cable assembly consists of the type of cable and connectors, the length of the cable assembly and the IEC standard number, as shown below:

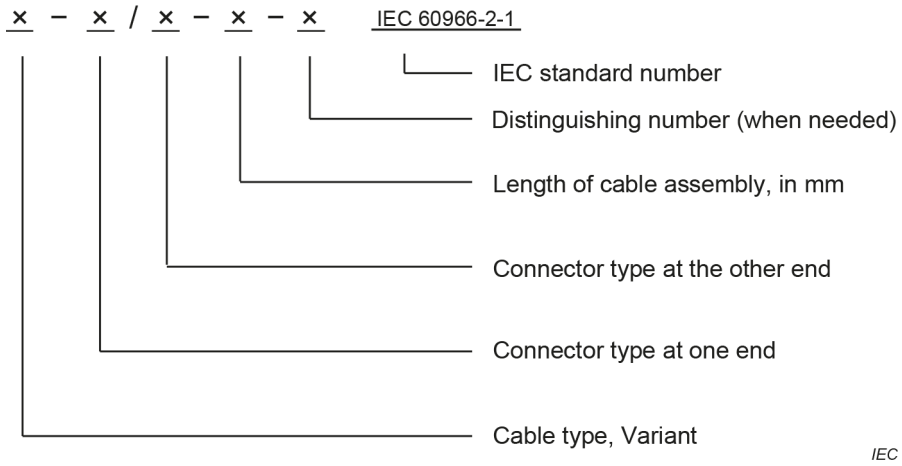

Example 1: RG316-SMA-P/SMA-P-3000-A-IEC60966-2-1 cable assembly is composed of type RG316 flexible RF coaxial cable, one end is type SMA-P connector and the other end is type SMA-P connector, the length of the cable assembly is 3 000 mm, its distinguishing number is A. This cable assembly complies with IEC 60966-2-1.

Example 2: RG142-SMAJ-2000-B-IEC60966-2 cable assembly is composed of type RG142 flexible RF coaxial cable, one end is type SMAJ connector and the other end empty, the length of the cable assembly is 2 000 mm, its distinguishing number is B. This cable assembly complies with IEC 60966-2-1.

Documents
Document Sharing Hub
Full document details: IEC 60966-2-1-2024

7 Standard rating and characteristics

7.1 Nominal characteristic impedance

The nominal characteristic impedance shall be 50 Ω or as specified in the relevant detail specification.

7.2 Temperature range

The rated temperature range of cable components made of different cables, connectors and auxiliary materials shall comply with the provisions in Table 1 or as specified in their detail specification.

Table 1 – Rated temperature of cable assemblies with flexible cables

Materials used in cable assemblies	Storage °C	Installation °C	Operational °C
PE	−40 to +70	−30 to +60	−40 to +70
PP	−20 to +85	−10 to +80	−10 to +80
PVC	−40 to +75	−30 to +60	−40 to +70
TPE	−40 to +85	−30 to +80	−40 to +80
Silica gel	−40 to +150	−20 to +150	−20 to +150
Rubber	−40 to +105	−20 to +100	−20 to +100
LSZH	−25 to +70	−15 to +60	−25 to +70
XLPE	−55 to +105	−40 to +100	−40 to +100
PVDF	−40 to +125	−40 to +60	−40 to +125
FEP	−60 to +200	−60 to +200	−60 to +200
PFA	−60 to +250	−60 to +230	−60 to +230
ETFE	−60 to +150	−60 to +150	−60 to +150
PTFE	−60 to +250	−60 to +250	−60 to +250
Ordinary tin solder (Sn)	−60 to +150	−60 to +150	−60 to +150

7.3 Bending radius

7.3.1 Static bending radius

The static bending radius R of the cable assembly shall not be less than 5 times the cable diameter D, i.e. $R \geq 5 \times D$, or as specified in the relevant detail specification.

7.3.2 Dynamic bending radius

The dynamic bending radius R of the cable assembly shall not be less than 10 times the cable diameter D, i.e. $R \geq 10 \times D$, or as specified in the relevant detail specification.

7.4 Rated operating frequency range

The operating frequency range of cable assemblies shall be as specified in the relevant detail specification.

7.5 Rated working voltage

The rated operating voltage range of cable assemblies shall be as specified in the relevant detail specification.

AVA Documents
Document Sharing Hub

Full document details: IEC 60966-2-1-2024

7.6 Rated power

When required, the rated RF power of cable assemblies shall be in accordance with the relevant detail specification.

8 Requirements of finished cable assemblies

8.1 General

For finished cable assemblies, the requirements given below shall apply when they are tested in accordance with IEC 60966-1:2019 and the test methods specified herein.

When needed, cable assemblies with one connector shall be terminated with a suitable connector at the cable end to do the test and cut off after the test.

Unless otherwise specified, all measurements shall be carried out under standard atmospheric conditions for testing in accordance with IEC 60966-1:2019, Clause 7.

8.2 Electrical requirements

Electrical requirements are given in Table 2.

Table 2 – Electrical requirements

No.	Inspection	Test method IEC 60966-1:2019	Requirements/Remarks
1	Reflection properties (Return loss)	8.1	Value in accordance with the relevant detail specification. While the parameter return loss (A_r) is preferred, the reflection factor (r) or the VSWR (voltage standing wave ratio) may be specified where $A_r = -20 \log_{10} \lvert r \rvert$ and $\text{VSWR} = \frac{1+\lvert r \rvert}{1-\lvert r \rvert}$
2	Uniformity of impedance	8.2	Rise time of the TDR system in accordance with the relevant detail specification. The characteristic impedance variation shall not exceed ± 5 % of the nominal value or shall be in accordance with the relevant detail specifications.
3	Insertion loss	8.3	Value in accordance with the relevant detail specification.
4	Insertion loss stability	8.4	When required, unless otherwise specified in the relevant detail specification, test conditions and requirements are as follows: a) test mandrel radius: $5D$, where D is the diameter of the cable. b) number of turns: 5 c) portion of the cable assembly on the mandrel is its central portion d) after bent, the insertion loss variation shall not exceed ± 5 % or it shall be in accordance with the relevant detail specification.
5	Propagation time	8.5	When required, value in accordance with the relevant detail specification.

AVA Documents
Document Sharing Hub
Full document details: IEC 60966-2-1-2024

No.	Inspection	Test method IEC 60966-1:2019	Requirements/Remarks
6	Stability of electrical length	8.6	When required, test conditions and requirements in accordance with the relevant detail specification. The typical value of stability of electrical length is within ±0,5°/GHz.
7	Phase difference	8.7	When required, the phase difference shall not exceed the limits specified in the relevant detail specification. When more than two cable assemblies are measured, the reference cable shall be clearly marked. The typical value of phase difference is within ±0,6°/GHz.
8	Insertion loss difference	8.7	When required, the test is carried out in accordance with IEC 60966-1:2019, Clause 8 except that the test parameters are insertion loss instead of phase. When required, insertion loss difference shall not exceed 5 % of the typical value, or it shall be in accordance with the detail specification.
9	Phase variation with temperature	8.8	When required, value in accordance with the relevant detail specification.
10	Screening effectiveness	8.9	When required, value of transfer impedance or shield attenuation in accordance with detail specification.
11	Voltage proof	8.10	Value in accordance with the relevant detail specification. There shall be no breakdown, arcing or flashover throughout.
12	Insulation resistance	8.11	≥5 000 MΩ, or in accordance with the relevant detail specification.
13	Inner and outer conductor continuity	8.12	Test voltage : ≤ 36 V DC. Inner conductor and outer conductor shall be continuous respectively.
14	Power rating	8.13	When required, test conditions and value in accordance with the relevant detail specification.
15	PIM	8.14	When required, if applicable to 50 Ω assemblies, the test frequencies (f1 and f2), input power, PIM values in accordance with the relevant detail specification. Typical assemblies with the following connectors, when tested at frequency 700 MHz\ 800 MHz\ 900 MHz\ 1 800 MHz\ 2 100 MHz\ 2 600 MHz, input power: 2×20 W, the PIM shall be as follows: – ≤−150 dBc (with N type connectors); – ≤−155 dBc (with 4.3/10 type connectors); – ≤−155 dBc (with 7/16 type connectors).
16	Corona extinction voltage	IEC 61196-1-126	When required, sample preparation is not needed, and the test is carried out in air without immersion in insulating oil, value in accordance with the relevant detail specification. It is recommended to use a relatively non corona adapter to connect the cable assembly for testing.
17	Shaking test	Annex B of this specification	When required, the test shall be conducted in accordance with Annex B of this specification, and the rate of change shall not exceed ±5 %, or it shall be in accordance with the detail specification.

Documents
Document Sharing Hub
Full document details: IEC 60966-2-1-2024

8.3 Mechanical requirements

Mechanical requirements are given in Table 3.

Table 3 – Mechanical requirements

No.	Inspection	Test method IEC 60966-1:2019	Requirements/Remarks
1	Visual inspection	7.2	Meets the requirements of IEC 60966-1:2019, Clause 5 and 7.2.
2	The relative position dimensions of the interface	7.3.1	Value in accordance with the relevant detail specification. The relative position dimensions of the interface of some typical connectors are shown in Annex A of this specification.
3	Outline of the cable assembly	7.3.2	Value in accordance with the relevant detail specification.
4	Tensile	9.1	Value of the force and duration in accordance with the relevant detail specification. Normally, the duration is 60 s. Requirements after the test: a) no visual damage or loosening of the assembly; b) the relative position dimensions of the interface shall be in accordance with No.2 of Table 3; c) the reflection properties shall be in accordance with No.1 of Table 2; d) the voltage proof shall be in accordance with No.11 of Table 2.
5	Flexure	9.2	Value of the force F, number of flexures (normally 500) in accordance with the relevant detail specification. Requirements after the test: a) no visual damage or loosening of the assembly; b) the relative position dimensions of the interface shall be in accordance with No.2 of Table 3; c) the reflection properties shall be in accordance with No.1 of Table 2; d) the voltage proof shall be in accordance with No.11 of Table 2.
6	Flexing endurance	9.3	When required, the movement amplitude (normally half the length of the assembly), number of cycles (normally 500) in accordance with the relevant detail specification. Requirements after the test: a) no visual damage or loosening of the assembly; b) the relative position dimensions of the interface shall be in accordance with No.2 of Table 3; c) the reflection properties shall be in accordance with No.1 of Table 2; d) the voltage proof shall be in accordance with No.11 of Table 2.

Documents
Document Sharing Hub
Full document details: IEC 60966-2-1-2024

No.	Inspection	Test method IEC 60966-1:2019	Requirements/Remarks
7	Cable assembly crushing	9.4	When required, value of the force F (normally 800 N), distance from the test region to one of the connectors (normally 1 m maximum) in accordance with the relevant detail specification. Requirements after test: a) no visual damage or loosening of the assembly; b) the relative position dimensions of the interface shall be in accordance with No.2 of Table 3; c) the reflection properties shall be in accordance with No.1 of Table 2; d) the insertion loss shall be in accordance with No.3 of Table 2; e) the voltage proof shall be in accordance with No.11 of Table 2.
8	Multiple bending	9.6	When required, the number of cycles (normally 20) in accordance with the relevant detail specification. Requirements after test: a) no visual damage or loosening of the assembly; b) the relative position dimensions of the interface shall be in accordance with No.2 of Table 3; c) the reflection properties shall be in accordance with No.1 of Table 2; d) the voltage proof shall be in accordance with No.11 of Table 2.
9	Abrasion test of cable assembly	9.7	When required, the number of completed cycles for all four tests in accordance with the relevant detail specification.
10	Vibrations, shocks	9.8, Annex C	When required, the preferred arrangement for the vibration test is described in Annex C.of this specification. a) Vibration: Swept frequency range, vibration amplitude, duration in accordance with the relevant detail specification. b) Shock: The shape of pulse wave, peak acceleration and the duration of the pulse in accordance with the relevant detail specification. c) Three perpendicular directions, one of which shall be parallel to the common axis of the connectors, shall be tested. Requirements after test: a) no visual damage or loosening of the assembly; b) no electrical interruptions exceeding 1 µs when testing; c) the relative position dimensions of the interface shall be in accordance with No.2 of Table 3.
11	Impact test	9.9	When required, heights and number of dropping cycles at each height in accordance with the relevant detail specification. Requirements after test: no visual damage or loosening of the assembly.

Documents
Document Sharing Hub
Full document details: IEC 60966-2-1-2024

No.	Inspection	Test method IEC 60966-1:2019	Requirements/Remarks
12	Mechanical endurance	9.10	When required, 500 operations or in accordance with the relevant detail specification. Requirements after test: a) no visual damage or loosening of the assembly; b) the reflection properties shall be in accordance with No.1 of Table 2.

8.4 Environmental requirements

Environmental requirements are given in Table 4.

Table 4 – Environmental requirements

No.	Inspection	Test method IEC 60966-1:2019	Requirements/Remarks
1	Climatic sequence	10.3	When required, test conditions in accordance with the relevant detail specification. After the test, conduct the insulation resistance measurement and the voltage proof test within 30 min of the end of the recovery period. Requirements after test: a) no visual damage or loosening of the assembly; b) the relative position dimensions of the interface shall be in accordance with No.2 of Table 3; c) the insulation resistance shall be in accordance with No.12 of Table 2; d) the voltage proof shall be in accordance with No.11 of Table 2; e) the insertion loss shall be in accordance with No.3 of Table 2.
2	Damp heat, steady state	10.4	When required, the temperature shall be: 40 °C ± 2 °C Humidity: (93 % ± 3 %) RH Duration: 10 days or in accordance with the relevant detail specification. After the test, conduct the insulation resistance measurement and the voltage proof test within 30 min of the end of the recovery period. Requirements after test: a) no visual damage or loosening of the assembly; b) the relative position dimensions of the interface shall be in accordance with No.2 of Table 3; c) the insulation resistance shall be in accordance with No.12 of Table 2; d) the voltage proof shall be in accordance with No.11 of Table 2; e) the insertion loss shall be in accordance with No.3 of Table 2.

Documents
Document Sharing Hub
Full document details: IEC 60966-2-1-2024

No.	Inspection	Test method IEC 60966-1:2019	Requirements/Remarks
3	Rapid change of temperature	10.5	When required, low and high conditioning temperature shall be in accordance with the relevant detail specification. Requirements after test: a) no visual damage or loosening of the assembly; b) the relative position dimensions of the interface shall be in accordance with No.2 of Table 3; c) the insulation resistance shall be in accordance with No.12 of Table 2; d) the voltage proof shall be in accordance with No.11 of Table 2; e) the reflection properties shall be in accordance with No.1 of Table 2; f) the insertion loss shall be in accordance with No.3 of Table 2.
4	Resistance to solvents and contaminating fluids	10.6	When required, after the test and the recovery period, conduct the insulation resistance measurement. Requirements after test: a) no visual damage or loosening of the assembly; b) the end connectors shall insert and separate freely in normal manner; c) the relative position dimensions of the interface shall be in accordance with No.2 of Table 3; d) the insulation resistance shall be in accordance with No.12 of Table 2; e) the insertion loss shall be in accordance with No.3 of Table 2.
5	Water immersion	10.7	When required, after the test and the recovery period, conduct the insulation resistance and the voltage proof test. Requirements after test: a) no visual damage or loosening of the assembly; b) the relative position dimensions of the interface shall be in accordance with No.2 of Table 3; c) the end connectors shall insert and separate freely in normal manner; d) the insulation resistance shall be in accordance with No.12 of Table 2; e) the voltage proof shall be in accordance with No.11 of Table 2.
6	Salt mist and sulphur dioxide tests	10.8	When required, test conditions in accordance with the relevant detail specification. Requirements after test: a) no visual damage or loosening of the assembly; b) the end connectors shall insert and separate freely in normal manner; c) the insulation resistance shall be in accordance with No.12 of Table 2; d) the insertion loss shall be in accordance with No.3 of Table 2.

Documents
Document Sharing Hub
Full document details: IEC 60966-2-1-2024