IEC 60974-12

Edition 4.0 2022-07
REDLINE VERSION

INTERNATIONAL STANDARD

colour inside

Arc welding equipment –
Part 12: Coupling devices for welding cables

IEC 60974-12:2022-07 RLV(en)

Documents
Document Sharing Hub

Full document details: IEC 60974-12 2022 RLV

THIS PUBLICATION IS COPYRIGHT PROTECTED
Copyright © 2022 IEC, Geneva, Switzerland

All rights reserved. Unless otherwise specified, no part of this publication may be reproduced or utilized in any form or by any means, electronic or mechanical, including photocopying and microfilm, without permission in writing from either IEC or IEC's member National Committee in the country of the requester. If you have any questions about IEC copyright or have an enquiry about obtaining additional rights to this publication, please contact the address below or your local IEC member National Committee for further information.

IEC Secretariat
3, rue de Varembé
CH-1211 Geneva 20
Switzerland

Tel.: +41 22 919 02 11
info@iec.ch
www.iec.ch

About the IEC
The International Electrotechnical Commission (IEC) is the leading global organization that prepares and publishes International Standards for all electrical, electronic and related technologies.

About IEC publications
The technical content of IEC publications is kept under constant review by the IEC. Please make sure that you have the latest edition, a corrigendum or an amendment might have been published.

IEC publications search - webstore.iec.ch/advsearchform
The advanced search enables to find IEC publications by a variety of criteria (reference number, text, technical committee, …). It also gives information on projects, replaced and withdrawn publications.

IEC Just Published - webstore.iec.ch/justpublished
Stay up to date on all new IEC publications. Just Published details all new publications released. Available online and once a month by email.

IEC Customer Service Centre - webstore.iec.ch/csc
If you wish to give us your feedback on this publication or need further assistance, please contact the Customer Service Centre: sales@iec.ch.

IEC Products & Services Portal - products.iec.ch
Discover our powerful search engine and read freely all the publications previews. With a subscription you will always have access to up to date content tailored to your needs.

Electropedia - www.electropedia.org
The world's leading online dictionary on electrotechnology, containing more than 22 300 terminological entries in English and French, with equivalent terms in 19 additional languages. Also known as the International Electrotechnical Vocabulary (IEV) online.

Documents
Document Sharing Hub

Full document details: IEC 60974-12 2022 RLV

IEC 60974-12

Edition 4.0 2022-07
REDLINE VERSION

INTERNATIONAL STANDARD

colour inside

Arc welding equipment –
Part 12: Coupling devices for welding cables

INTERNATIONAL
ELECTROTECHNICAL
COMMISSION

ICS 25.160.30

ISBN 978-2-8322-3980-3

Warning! Make sure that you obtained this publication from an authorized distributor.

® Registered trademark of the International Electrotechnical Commission

Documents
Document Sharing Hub

Full document details: IEC 60974-12 2022 RLV

CONTENTS

FOREWORD 4
1 Scope 6
2 Normative references 6
3 Terms and definitions 6
4 Environmental conditions 7
5 ~~Type~~ Tests 7
5.1 Test conditions 7
5.2 Measuring instruments 7
5.3 Test sequence 7
6 Designation 7
7 Protection against electric shock 8
7.1 Voltage rating 8
7.2 Insulation resistance 8
7.3 Dielectric strength 9
7.3.1 General requirement 9
7.3.2 Additional requirements for ARC STRIKING VOLTAGE or ARC STABILIZING VOLTAGE rating 9
7.4 Protection of live parts against unintentional contact 9
8 Thermal rating 10
8.1 Temperature rise 10
8.2 Resistance to hot objects 10
9 Mechanical requirements 11
9.1 RETAINING MEANS 11
9.2 Welding cable entry 11
9.3 Penetration of the welding cable insulation 11
9.4 Welding cable connection 11
9.5 Crush strength 12
9.6 Dimensions 12
10 Marking 12
11 Instructions for use 13
Annex A (normative) Dimensions 14
Bibliography 17

Figure 1 – Device for testing the resistance to hot objects 10
Figure A.1 – Male element 14
Figure A.2 – Female element 14
Figure A.3 – Type 1 locking pin maximum outline shape 15
Figure A.4 – Type 2 locking pin maximum outline shape 16
Figure A.5 – Type 3 locking pin maximum outline shape 16

Table 1 – Relation between COUPLING DEVICE test current and welding cables' cross-sectional area 8
Table 2 – Voltage rating of COUPLING DEVICES 8
Table 3 – Crush force 12

AVA Documents
Document Sharing Hub

Full document details: IEC 60974-12 2022 RLV

Table A.1 – Dimensions for Figure A.1, Figure A.2, Figure A.3, Figure A.4, and Figure A.5 15

Documents
Document Sharing Hub

Full document details: IEC 60974-12 2022 RLV

INTERNATIONAL ELECTROTECHNICAL COMMISSION

ARC WELDING EQUIPMENT –

Part 12: Coupling devices for welding cables

FOREWORD

1) The International Electrotechnical Commission (IEC) is a worldwide organization for standardization comprising all national electrotechnical committees (IEC National Committees). The object of IEC is to promote international co-operation on all questions concerning standardization in the electrical and electronic fields. To this end and in addition to other activities, IEC publishes International Standards, Technical Specifications, Technical Reports, Publicly Available Specifications (PAS) and Guides (hereafter referred to as "IEC Publication(s)"). Their preparation is entrusted to technical committees; any IEC National Committee interested in the subject dealt with may participate in this preparatory work. International, governmental and non-governmental organizations liaising with the IEC also participate in this preparation. IEC collaborates closely with the International Organization for Standardization (ISO) in accordance with conditions determined by agreement between the two organizations.
2) The formal decisions or agreements of IEC on technical matters express, as nearly as possible, an international consensus of opinion on the relevant subjects since each technical committee has representation from all interested IEC National Committees.
3) IEC Publications have the form of recommendations for international use and are accepted by IEC National Committees in that sense. While all reasonable efforts are made to ensure that the technical content of IEC Publications is accurate, IEC cannot be held responsible for the way in which they are used or for any misinterpretation by any end user.
4) In order to promote international uniformity, IEC National Committees undertake to apply IEC Publications transparently to the maximum extent possible in their national and regional publications. Any divergence between any IEC Publication and the corresponding national or regional publication shall be clearly indicated in the latter.
5) IEC itself does not provide any attestation of conformity. Independent certification bodies provide conformity assessment services and, in some areas, access to IEC marks of conformity. IEC is not responsible for any services carried out by independent certification bodies.
6) All users should ensure that they have the latest edition of this publication.
7) No liability shall attach to IEC or its directors, employees, servants or agents including individual experts and members of its technical committees and IEC National Committees for any personal injury, property damage or other damage of any nature whatsoever, whether direct or indirect, or for costs (including legal fees) and expenses arising out of the publication, use of, or reliance upon, this IEC Publication or any other IEC Publications.
8) Attention is drawn to the Normative references cited in this publication. Use of the referenced publications is indispensable for the correct application of this publication.
9) Attention is drawn to the possibility that some of the elements of this IEC Publication may be the subject of patent rights. IEC shall not be held responsible for identifying any or all such patent rights.

This redline version of the official IEC Standard allows the user to identify the changes made to the previous edition IEC 60974-12:2011. A vertical bar appears in the margin wherever a change has been made. Additions are in green text, deletions are in strikethrough red text.

Documents
Document Sharing Hub

Full document details: IEC 60974-12 2022 RLV

IEC 60974-12 has been prepared by IEC technical committee 26: Electric welding. It is an International Standard.

This fourth edition cancels and replaces the third edition published in 2011. This edition constitutes a technical revision.

This edition includes the following significant technical changes with respect to the previous edition:

a) updated Table 1 to include 100 % duty cycle;

b) updated Annex A to provide more detail.

The text of this document is based on the following documents:

Draft	Report on voting
26/734/FDIS	26/736/RVD

Full information on the voting for its approval can be found in the report on voting indicated in the above table.

The language used for the development of this International Standard is English.

This document was drafted in accordance with ISO/IEC Directives, Part 2, and developed in accordance with ISO/IEC Directives, Part 1 and ISO/IEC Directives, IEC Supplement, available at www.iec.ch/members_experts/refdocs. The main document types developed by IEC are described in greater detail at www.iec.ch/standardsdev/publications.

In this document, the following print types are used:

– *conformity statements*: *in italic type*.

– terms used throughout this document which have been defined in Clause 3: SMALL ROMAN CAPITALS.

A list of all parts of the IEC 60974 series can be found, under the general title *Arc welding equipment*, on the IEC website.

The committee has decided that the contents of this document will remain unchanged until the stability date indicated on the IEC website under webstore.iec.ch in the data related to the specific document. At this date, the document will be

- reconfirmed,
- withdrawn,
- replaced by a revised edition, or
- amended.

IMPORTANT – The "colour inside" logo on the cover page of this document indicates that it contains colours which are considered to be useful for the correct understanding of its contents. Users should therefore print this document using a colour printer.

Documents
Document Sharing Hub

Full document details: IEC 60974-12 2022 RLV

ARC WELDING EQUIPMENT –

Part 12: Coupling devices for welding cables

1 Scope

This part of IEC 60974 is applicable to COUPLING DEVICES for cables used in arc welding and allied processes, designed for connection and disconnection without using tools.

This part of IEC 60974 specifies safety and performance requirements of COUPLING DEVICES.

This part of IEC 60974 is not applicable to COUPLING DEVICES for underwater welding.

2 Normative references

The following documents are referred to in the text in such a way that some or all of their content constitutes requirements of this document. For dated references, only the edition cited applies. For undated references, the latest edition of the referenced document (including any amendments) applies.

IEC 60050-151, *International Electrotechnical Vocabulary (IEV) – Part 151: Electrical and magnetic devices*

IEC 60529, *Degrees of protection provided by enclosures (IP Code)*

IEC 60974-1:2021, *Arc welding equipment – Part 1: Welding power sources*

3 Terms and definitions

For the purposes of this document, the terms and definitions given in IEC 60050-151 and IEC 60974-1, as well as the following apply.

ISO and IEC maintain terminological databases for use in standardization at the following addresses:

- IEC Electropedia: available at http://www.electropedia.org/
- ISO Online browsing platform: available at http://www.iso.org/obp

3.1
COUPLING DEVICE
device connecting two welding cables together or connecting a welding cable to welding equipment

3.2
RETAINING MEANS
mechanical arrangement that holds the COUPLING DEVICE in position and prevents an unintentional withdrawal, when properly connected

3.3
ARC STRIKING ~~and stabilizing~~ VOLTAGE
voltage superimposed on the welding circuit to ~~initiate or maintain~~ ignite the arc

Documents
Document Sharing Hub

Full document details: IEC 60974-12 2022 RLV

3.4
ARC STABILIZING VOLTAGE
voltage superimposed on the arc voltage to maintain the arc

4 Environmental conditions

The COUPLING DEVICE shall be capable of operation when the following environmental conditions prevail:

a) range of ambient air temperature:
   – during operation: −10 °C to + 40 °C;
b) relative humidity of the air: up to 90 % at 20 °C.

~~The coupling device shall withstand storage and transport at an ambient air temperature of −20 °C to + 55 °C without any damage to function and performance.~~

5 ~~Type~~ Tests

5.1 Test conditions

All type tests shall be carried out on the same new and completely assembled COUPLING DEVICE.

All type tests shall be carried out at an ambient air temperature between 10 °C and 40 °C.

~~The accuracy of measuring instruments shall be:~~

~~a) electrical measuring instruments: class 1 (± 1 % of full-scale reading), except for the measurement of insulation resistance and dielectric strength where the accuracy of the instruments is not specified, but shall be taken into account for the measurement;~~

~~b) temperature measuring devices: ± 2 K.~~

5.2 Measuring instruments

As specified in 5.2 of IEC 60974-1:2021.

5.3 Test sequence

The type tests given below shall be carried out in the following sequence:

a) general visual inspection;
b) temperature rise, see 8.1;
c) crush strength, see 9.5;
d) insulation resistance, see 7.2;
e) dielectric strength, see 7.3.

The other type tests in this document not mentioned above ~~may~~ can be carried out in any convenient sequence.

6 Designation

COUPLING DEVICES shall be designated by the range of cross-sectional area of the welding cable intended to be connected. The test current ~~at an ambient air temperature of 40 °C~~ is given in Table 1 based on maximum cross-section area. The welding COUPLING DEVICE shall accept the minimum cross-sectional area as given in Table 1. It is possible that a reduced minimum cross-sectional area ~~may~~ be ~~reduced~~ specified to extend the COUPLING DEVICE fitting range.

Documents
Document Sharing Hub

NOTE Current capacity of welding cables is given in Table D.4 of EN 50565-1:2014. The 60 % duty cycle current rating relates to 25 °C of this table.

Table 1 – Relation between COUPLING DEVICE test current and welding cables' cross-sectional area

Range of cross-sectional area mm^2	COUPLING DEVICE test current at 60 % duty cycle A
1 to 6	80
~~up~~ 6 to 10	125
10 to 16	150
16 to 25	200
25 to 35	250
35 to 50	300
50 to 70	400
70 to 95	500
95 to 120	600
NOTE ~~Welding cables are rated based on cross-sectional area.~~ Test current is defined in order that COUPLING DEVICE withstands the rated current of the welding cable.	

Conformity shall be checked by measurement.

7 Protection against electric shock

7.1 Voltage rating

COUPLING DEVICES shall be rated in accordance with the process as given in Table 2 and the ARC STRIKING VOLTAGE ~~and~~ or ARC STABILIZING VOLTAGE if applicable.

Table 2 – Voltage rating of COUPLING DEVICES

Process	Voltage rating V peak	Insulation resistance MΩ	Dielectric strength V RMS	Degree of protection in accordance with IEC 60529
All processes except plasma cutting	113	2,5	1 000	IP 3X
Plasma cutting	500	2,5	2 100	IP 3X

7.2 Insulation resistance

The insulation resistance of a new COUPLING DEVICE shall, after the humidity treatment, be not less than 2,5 MΩ.

Conformity shall be checked by the following test.

a) Humidity treatment

A humidity cabinet is maintained at a temperature t between 20 °C and 30 °C and a relative humidity between 91 % and 95 %.

The COUPLING DEVICE without cables fitted is brought to a temperature between t and t + 4 K and is then placed for 48 h in the humidity cabinet.

AVA Documents Document Sharing Hub

b) Insulation resistance measurement

Immediately after the humidity treatment, the COUPLING DEVICE is wiped clean and tightly wrapped in a metal foil covering the external surface of the insulation.

The insulation resistance is measured by application of a DC voltage of 500 V between the live parts and the metal foil, the reading being made after stabilization of the measurement.

7.3 Dielectric strength

7.3.1 General requirement

The insulation shall withstand an AC test voltage of 2 100 V RMS for plasma cutting or 1 000 V RMS for all other processes without flashover or break down. Any discharges unaccompanied by a voltage drop are disregarded.

Conformity shall be checked by the following test.

The COUPLING DEVICE is wiped clean and tightly wrapped in a metal foil covering the external surface of the insulation.

The AC test voltage shall be of an approximate sine waveform with a peak value not exceeding 1,45 times the RMS value, having a frequency of 50 Hz or 60 Hz, applied for 1 min between the live parts and the metal foil.

7.3.2 Additional requirements for ARC STRIKING VOLTAGE ~~and~~ or ARC STABILIZING VOLTAGE rating

For couplers for use with ARC STRIKING VOLTAGE ~~and~~ or ARC STABILIZING VOLTAGE, the insulation shall withstand the rated peak ARC STRIKING VOLTAGE ~~and~~ or ARC STABILIZING VOLTAGE as rated by the manufacturer. The insulation shall withstand a high frequency voltage of pulse width 0,2 µs to 8 µs, a repetition frequency of 50 Hz to 300 Hz and shall be 20 % higher than the rated peak ARC STRIKING VOLTAGE ~~and~~ or ARC STABILIZING VOLTAGE as determined by the manufacturer.

Conformity shall be checked by the following test.

For couplers intended for use with ARC STRIKING VOLTAGE ~~and~~ or ARC STABILIZING VOLTAGE, the couplers shall be subjected to the high-frequency test voltage. The full value of the high-frequency voltage is applied for 2 s between the electrode circuit, and

a) conductive surfaces;

b) other isolated circuits.

Flashover or breakdown shall not occur. Any discharges unaccompanied by a voltage drop (corona) are disregarded.

Alternatively, for couplers intended for use with ARC STRIKING VOLTAGE ~~and~~ or ARC STABILIZING VOLTAGE, an AC test voltage of approximately sine waveform at 50 Hz or 60 Hz ~~may~~ can be used.

7.4 Protection of live parts against unintentional contact

Parts designed to carry welding current and likely to be live after disconnection shall be recessed to a depth of at least 10 % of the internal diameter of the insulation with a minimum depth of 2 mm with respect to the insulating body.

As a consequence, insulation ~~has to~~ shall be able to withstand normal service conditions so that the protecting length is maintained during the life of the COUPLING DEVICE.

Documents
Document Sharing Hub

Full document details: IEC 60974-12 2022 RLV

Conformity shall be checked by linear measurement and visual inspection.

8 Thermal rating

8.1 Temperature rise

The temperature rise caused by the current passing through a COUPLING DEVICE normally coupled and fitted with an untinned copper welding cable of maximum cross-sectional area as indicated in Table 1 shall not exceed 45 K at the hottest spot of the external surface.

Conformity shall be checked by the following test.

The COUPLING DEVICE is normally coupled and fitted with at least 2 m long welding cables. The COUPLING DEVICE is suspended by its welding cables from two wooden laths 1 m apart, hanging between the two laths in the horizontal plane about 200 mm above the ground in a draught-free area.

A continuous DC current equal to 75 % of the test current (equivalent to approximately 60 % duty cycle) is passed through the COUPLING DEVICE until the rate of the temperature rise does not exceed 2 K/h. During the total test time, the DC current shall be kept constant with a tolerance of ± 2 %.

8.2 Resistance to hot objects

The insulation shall be capable of withstanding hot objects and the effects of a normal amount of weld spatter without being ignited or becoming unsafe.

Conformity shall be checked with a device in accordance with Figure 1.

Dimensions in millimetres

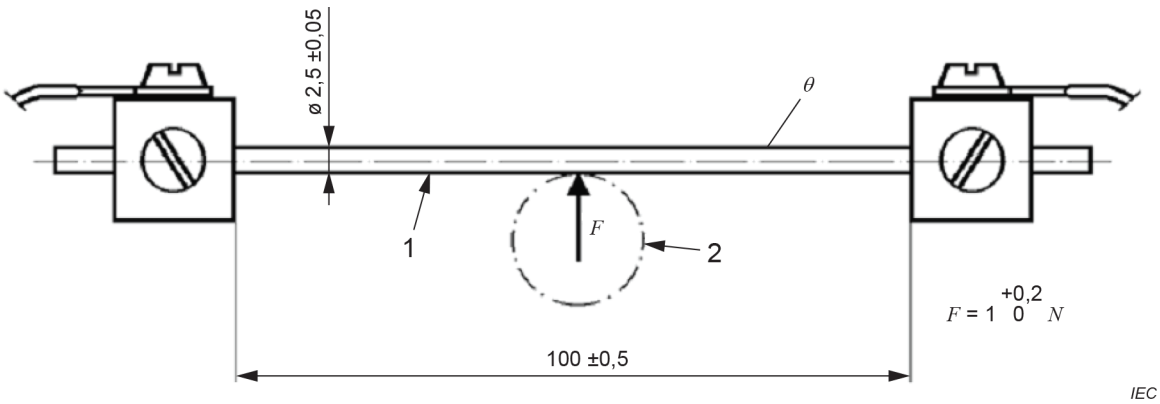

Key

1 18/8 chrome-nickel steel rod

2 COUPLING DEVICE

θ test temperature

Figure 1 – Device for testing the resistance to hot objects

An electric current (of approximately 25 A) is passed through the 18/8 chrome-nickel steel rod until a steady-state temperature θ of $300\,^{+5}_{0}$ °C is reached. During the test, the temperature of the heated rod shall be maintained. This temperature will be measured by a contact thermometer or thermocouple.

Documents
Document Sharing Hub
Full document details: IEC 60974-12 2022 RLV

The heated rod in a horizontal position is then applied for 2 min to the insulation at the weakest point (for example, minimum insulation thickness and closest distance to live parts). The heated rod shall not penetrate through the insulation and contact live parts.

An attempt is made to ignite any gases which ~~may~~ can be emitted in the region of the contact point by means of an electric spark or small flame. If the gases are flammable, the burning shall stop as soon as the heated rod is removed.

9 Mechanical requirements

9.1 RETAINING MEANS

A RETAINING MEANS shall be provided to prevent the unintentional separation of the COUPLING DEVICE as a result of a longitudinal pull.

NOTE If possible, indicating marks, for example two lines opposite each other, ~~should~~ show by visual inspection that the RETAINING MEANS has functioned.

Conformity shall be checked by manual operation and visual inspection.

9.2 Welding cable entry

The cable entry of a cable coupler shall be designed to prevent damage to the cable ~~due to flexing~~ insulation causing exposed conductors.

Conformity shall be checked by bending the cable through an angle of 90°. Verify that there are no exposed conductors by visual inspection.

9.3 Penetration of the welding cable insulation

The design of cable couplers shall be such that the insulation of the cables can enter to a depth of at least twice the outer diameter of the welding cable with a minimum of 30 mm.

Conformity shall be checked by measurement with a welding cable of the maximum cross-sectional area as specified by the manufacturer.

9.4 Welding cable connection

The design of the COUPLING DEVICE shall be such that welding cables with a cross-sectional area within the range as specified by the manufacturer can be replaced. The connection shall withstand the mechanical stress of the tensile test without separation.

Conformity shall be checked by visual inspection and by the following test.

A plug, a connector or a plug connector is fitted in accordance with the manufacturer's instructions, with a welding cable of maximum cross-sectional area. The connection is subjected to 10 pulls with a force of 40 N/mm^2 of the cross-sectional area with a maximum of 2 000 N applied to the welding cable. The force of each pull is gradually increased from zero to the specified value in 1 s and maintained for 1 s.

After the test, the conductor shall not have been ~~noticeably~~ displaced by more than 2 mm.

This test shall be repeated with a welding cable having the minimum permissible cross-sectional area as specified by the manufacturer.

If more than one method of cable fixing is provided, all methods shall be tested.

Documents
Document Sharing Hub
Full document details: IEC 60974-12 2022 RLV

9.5 Crush strength

COUPLING DEVICES shall withstand the mechanical stress of the crush test without the insulation being destroyed or the mechanical functioning being impaired.

Conformity shall be checked by the following test, manual operation and visual inspection.

A cable coupler connected and fitted, in accordance with the manufacturer's instructions, with welding cables of maximum cross-sectional area is placed between the parallel plates of a press, the axis of the cable coupler being at a right angle to the direction of the crush force.

The crush force ~~is applied and gradually increased up~~ can be slowly raised over a maximum period of 10 s to the full value given in Table 3 . This crush force shall be maintained at the full value for 10 s.

Table 3 – Crush force

Cross-sectional area of welding cable mm^2	Crush force N
up to 25	1 200
25 to 50	1 500
above 50	2 000

This test shall be repeated with a welding cable of minimum cross-sectional area as specified by the manufacturer.

9.6 Dimensions

COUPLING DEVICES shall be designed in accordance with dimensions given in Annex A.

10 Marking

The following information shall be legibly and indelibly marked on COUPLING DEVICES designed to be attached to welding cables:

a) name of the manufacturer, distributor, importer or the registered trademark;

b) maximum permissible cross-sectional area of the welding cable;

c) minimum permissible cross-sectional area of the welding cable;

d) rated peak ARC STRIKING VOLTAGE ~~and~~ or ARC STABILIZING VOLTAGE if applicable;

e) reference to this document, confirming that the COUPLING DEVICE complies with the requirements.

For COUPLING DEVICES having a maximum permissible cross-sectional area less than or equal to 16 mm^2, the dimensions of which are such that it is not possible to put on all the markings clearly, item c) can be omitted and shown on the packing or in the literature.

COUPLING DEVICES designed to be mounted on a panel ~~need~~ shall not be marked.

Conformity shall be checked by reading the marking.

Documents
Document Sharing Hub

Full document details: IEC 60974-12 2022 RLV

11 Instructions for use

Each COUPLING DEVICE shall be delivered with an instruction sheet which includes the following information:

a) correct coupling and uncoupling of the COUPLING DEVICE;

b) correct connection of the welding cable;

c) choice of welding cable, type and size;

d) relation of permissible current and duty cycle.

Conformity shall be checked by reading the instructions.

Documents
Document Sharing Hub

Full document details: IEC 60974-12 2022 RLV

Annex A
(normative)

Dimensions

COUPLING DEVICES in accordance with this document shall have the dimensions as specified in Figure A.1, Figure A.2, Figure A.3, Figure A.4, Figure A.5 and in Table A.1.

~~NOTE The locking pin can be optionally cylindrical, conical or prismatic.~~

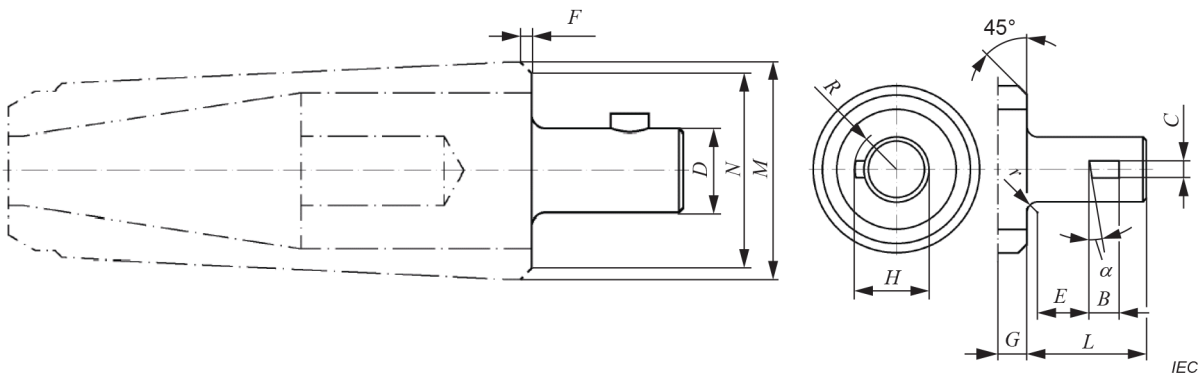

Figure A.1 – Male element

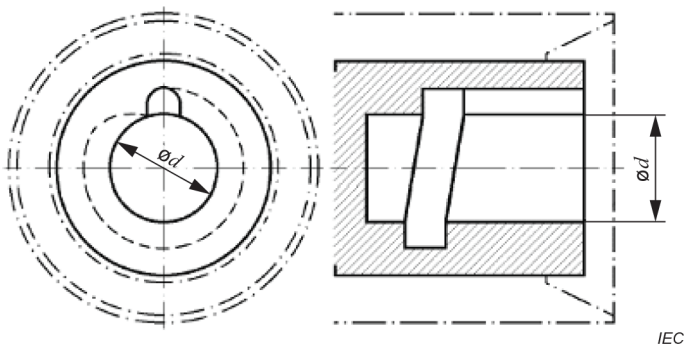

Figure A.2 – Female element

Dimensions and details not specified in Figure A.1 and Figure A.2 and Table A.1 are left to the discretion of the manufacturer.

Documents
Document Sharing Hub
Full document details: IEC 60974-12 2022 RLV

Table A.1 – Dimensions for Figure A.1, Figure A.2, Figure A.3, Figure A.4, and Figure A.5

Dimension		Dimension in millimetres or degrees		
		Type 1	Type 2	Type 3
α		4	5	1°40'
r		0,4	0,4	0,4
d		$9^{+0,08}_{+0,02}$	$13^{+0,08}_{+0,02}$	$15^{+0,08}_{+0,02}$
R	max.	5,6	8,7	10
N	max.	16	27	30
M	max.	26	40	45
H	max.	~~11~~ 10,5	~~15,5~~ 15,47	17,5
G	min.	6,5	7	7
F	min.	2	2,5	6
$E + r$		$4,65^{+0,1}_{0}$	$10,04^{+0,1}_{0}$	$15^{+0,1}_{0}$
D		$9^{-0,01}_{-0,1}$	$13^{-0,01}_{-0,1}$	$15^{-0,01}_{-0,1}$
C	max.	4,5	5,2	6
$C2$	max.	3,6	4,4	-
B	max.	4,5	5,2	6
L	max.	12	20	26

The locking pin can by cylindrical, conical or prismatic and shall not violate the maximum outlines specified in Figure A.3, Figure A.4, and Figure A.5.

NOTE The locking pin shape does not necessarily follow the max outline shape.

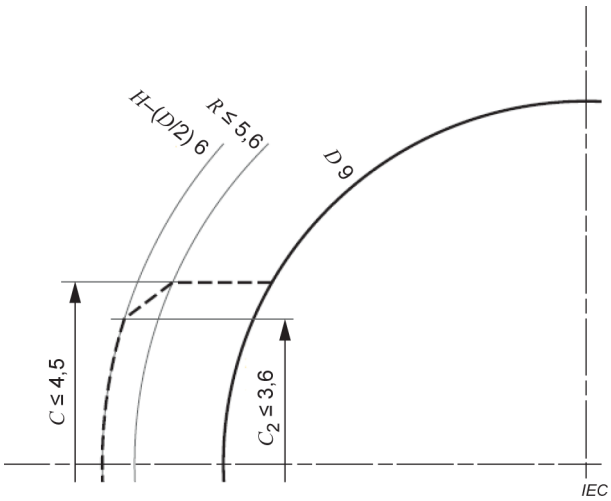

Figure A.3 – Type 1 locking pin maximum outline shape

Documents
Document Sharing Hub
Full document details: IEC 60974-12 2022 RLV