IEC 60974-12

Edition 4.0 2022-07

INTERNATIONAL STANDARD

NORME INTERNATIONALE

Arc welding equipment –
Part 12: Coupling devices for welding cables

Matériel de soudage à l'arc –
Partie 12: Dispositifs de connexion pour câbles de soudage

IEC 60974-12:2022-07(en-fr)

Documents
Document Sharing Hub
Full document details: IEC 60974-12 2022

THIS PUBLICATION IS COPYRIGHT PROTECTED
Copyright © 2022 IEC, Geneva, Switzerland

All rights reserved. Unless otherwise specified, no part of this publication may be reproduced or utilized in any form or by any means, electronic or mechanical, including photocopying and microfilm, without permission in writing from either IEC or IEC's member National Committee in the country of the requester. If you have any questions about IEC copyright or have an enquiry about obtaining additional rights to this publication, please contact the address below or your local IEC member National Committee for further information.

Droits de reproduction réservés. Sauf indication contraire, aucune partie de cette publication ne peut être reproduite ni utilisée sous quelque forme que ce soit et par aucun procédé, électronique ou mécanique, y compris la photocopie et les microfilms, sans l'accord écrit de l'IEC ou du Comité national de l'IEC du pays du demandeur. Si vous avez des questions sur le copyright de l'IEC ou si vous désirez obtenir des droits supplémentaires sur cette publication, utilisez les coordonnées ci-après ou contactez le Comité national de l'IEC de votre pays de résidence.

IEC Secretariat
3, rue de Varembé
CH-1211 Geneva 20
Switzerland

Tel.: +41 22 919 02 11
info@iec.ch
www.iec.ch

About the IEC
The International Electrotechnical Commission (IEC) is the leading global organization that prepares and publishes International Standards for all electrical, electronic and related technologies.

About IEC publications
The technical content of IEC publications is kept under constant review by the IEC. Please make sure that you have the latest edition, a corrigendum or an amendment might have been published.

IEC publications search - webstore.iec.ch/advsearchform
The advanced search enables to find IEC publications by a variety of criteria (reference number, text, technical committee, …). It also gives information on projects, replaced and withdrawn publications.

IEC Just Published - webstore.iec.ch/justpublished
Stay up to date on all new IEC publications. Just Published details all new publications released. Available online and once a month by email.

IEC Customer Service Centre - webstore.iec.ch/csc
If you wish to give us your feedback on this publication or need further assistance, please contact the Customer Service Centre: sales@iec.ch.

IEC Products & Services Portal - products.iec.ch
Discover our powerful search engine and read freely all the publications previews. With a subscription you will always have access to up to date content tailored to your needs.

Electropedia - www.electropedia.org
The world's leading online dictionary on electrotechnology, containing more than 22 300 terminological entries in English and French, with equivalent terms in 19 additional languages. Also known as the International Electrotechnical Vocabulary (IEV) online.

A propos de l'IEC
La Commission Electrotechnique Internationale (IEC) est la première organisation mondiale qui élabore et publie des Normes internationales pour tout ce qui a trait à l'électricité, à l'électronique et aux technologies apparentées.

A propos des publications IEC
Le contenu technique des publications IEC est constamment revu. Veuillez vous assurer que vous possédez l'édition la plus récente, un corrigendum ou amendement peut avoir été publié.

Recherche de publications IEC - webstore.iec.ch/advsearchform
La recherche avancée permet de trouver des publications IEC en utilisant différents critères (numéro de référence, texte, comité d'études, …). Elle donne aussi des informations sur les projets et les publications remplacées ou retirées.

IEC Just Published - webstore.iec.ch/justpublished
Restez informé sur les nouvelles publications IEC. Just Published détaille les nouvelles publications parues. Disponible en ligne et une fois par mois par email.

Service Clients - webstore.iec.ch/csc
Si vous désirez nous donner des commentaires sur cette publication ou si vous avez des questions contactez-nous: sales@iec.ch.

IEC Products & Services Portal - products.iec.ch
Découvrez notre puissant moteur de recherche et consultez gratuitement tous les aperçus des publications. Avec un abonnement, vous aurez toujours accès à un contenu à jour adapté à vos besoins.

Electropedia - www.electropedia.org
Le premier dictionnaire d'électrotechnologie en ligne au monde, avec plus de 22 300 articles terminologiques en anglais et en français, ainsi que les termes équivalents dans 19 langues additionnelles. Egalement appelé Vocabulaire Electrotechnique International (IEV) en ligne.

AVA Documents
Document Sharing Hub

Full document details: IEC 60974-12 2022

IEC 60974-12

Edition 4.0 2022-07

INTERNATIONAL STANDARD

NORME INTERNATIONALE

Arc welding equipment – Part 12: Coupling devices for welding cables

Matériel de soudage à l'arc – Partie 12: Dispositifs de connexion pour câbles de soudage

INTERNATIONAL ELECTROTECHNICAL COMMISSION

COMMISSION ELECTROTECHNIQUE INTERNATIONALE

ICS 25.160.30

ISBN 978-2-8322-3971-1

Warning! Make sure that you obtained this publication from an authorized distributor.
Attention! Veuillez vous assurer que vous avez obtenu cette publication via un distributeur agréé.

AVA Documents
Document Sharing Hub

® Registered trademark of the International Electrotechnical Commission
Marque déposée de la Commission Electrotechnique Internationale

Full document details: IEC 60974-12 2022

CONTENTS

FOREWORD 4
1 Scope 6
2 Normative references 6
3 Terms and definitions 6
4 Environmental conditions 7
5 Tests 7
5.1 Test conditions 7
5.2 Measuring instruments 7
5.3 Test sequence 7
6 Designation 7
7 Protection against electric shock 8
7.1 Voltage rating 8
7.2 Insulation resistance 8
7.3 Dielectric strength 9
7.3.1 General requirement 9
7.3.2 Additional requirements for ARC STRIKING VOLTAGE or ARC STABILIZING VOLTAGE rating 9
7.4 Protection of live parts against unintentional contact 9
8 Thermal rating 10
8.1 Temperature rise 10
8.2 Resistance to hot objects 10
9 Mechanical requirements 11
9.1 RETAINING MEANS 11
9.2 Welding cable entry 11
9.3 Penetration of the welding cable insulation 11
9.4 Welding cable connection 11
9.5 Crush strength 11
9.6 Dimensions 12
10 Marking 12
11 Instructions for use 13
Annex A (normative) Dimensions 14
Bibliography 17

Figure 1 – Device for testing the resistance to hot objects 10
Figure A.1 – Male element 14
Figure A.2 – Female element 14
Figure A.3 – Type 1 locking pin maximum outline shape 15
Figure A.4 – Type 2 locking pin maximum outline shape 16
Figure A.5 – Type 3 locking pin maximum outline shape 16

Table 1 – Relation between COUPLING DEVICE test current and welding cables' cross-sectional area 8
Table 2 – Voltage rating of COUPLING DEVICES 8
Table 3 – Crush force 12

AVA Documents
Document Sharing Hub

Full document details: IEC 60974-12 2022

Table A.1 – Dimensions for Figure A.1, Figure A.2, Figure A.3, Figure A.4, and Figure A.5 15

Documents
Document Sharing Hub

Full document details: IEC 60974-12 2022

INTERNATIONAL ELECTROTECHNICAL COMMISSION

ARC WELDING EQUIPMENT –

Part 12: Coupling devices for welding cables

FOREWORD

1) The International Electrotechnical Commission (IEC) is a worldwide organization for standardization comprising all national electrotechnical committees (IEC National Committees). The object of IEC is to promote international co-operation on all questions concerning standardization in the electrical and electronic fields. To this end and in addition to other activities, IEC publishes International Standards, Technical Specifications, Technical Reports, Publicly Available Specifications (PAS) and Guides (hereafter referred to as "IEC Publication(s)"). Their preparation is entrusted to technical committees; any IEC National Committee interested in the subject dealt with may participate in this preparatory work. International, governmental and non-governmental organizations liaising with the IEC also participate in this preparation. IEC collaborates closely with the International Organization for Standardization (ISO) in accordance with conditions determined by agreement between the two organizations.
2) The formal decisions or agreements of IEC on technical matters express, as nearly as possible, an international consensus of opinion on the relevant subjects since each technical committee has representation from all interested IEC National Committees.
3) IEC Publications have the form of recommendations for international use and are accepted by IEC National Committees in that sense. While all reasonable efforts are made to ensure that the technical content of IEC Publications is accurate, IEC cannot be held responsible for the way in which they are used or for any misinterpretation by any end user.
4) In order to promote international uniformity, IEC National Committees undertake to apply IEC Publications transparently to the maximum extent possible in their national and regional publications. Any divergence between any IEC Publication and the corresponding national or regional publication shall be clearly indicated in the latter.
5) IEC itself does not provide any attestation of conformity. Independent certification bodies provide conformity assessment services and, in some areas, access to IEC marks of conformity. IEC is not responsible for any services carried out by independent certification bodies.
6) All users should ensure that they have the latest edition of this publication.
7) No liability shall attach to IEC or its directors, employees, servants or agents including individual experts and members of its technical committees and IEC National Committees for any personal injury, property damage or other damage of any nature whatsoever, whether direct or indirect, or for costs (including legal fees) and expenses arising out of the publication, use of, or reliance upon, this IEC Publication or any other IEC Publications.
8) Attention is drawn to the Normative references cited in this publication. Use of the referenced publications is indispensable for the correct application of this publication.
9) Attention is drawn to the possibility that some of the elements of this IEC Publication may be the subject of patent rights. IEC shall not be held responsible for identifying any or all such patent rights.

IEC 60974-12 has been prepared by IEC technical committee 26: Electric welding. It is an International Standard.

This fourth edition cancels and replaces the third edition published in 2011. This edition constitutes a technical revision.

This edition includes the following significant technical changes with respect to the previous edition:

a) updated Table 1 to include 100 % duty cycle;
b) updated Annex A to provide more detail.

Documents
Document Sharing Hub

Full document details: IEC 60974-12 2022

The text of this document is based on the following documents:

Draft	Report on voting
26/734/FDIS	26/736/RVD

Full information on the voting for its approval can be found in the report on voting indicated in the above table.

The language used for the development of this International Standard is English.

This document was drafted in accordance with ISO/IEC Directives, Part 2, and developed in accordance with ISO/IEC Directives, Part 1 and ISO/IEC Directives, IEC Supplement, available at www.iec.ch/members_experts/refdocs. The main document types developed by IEC are described in greater detail at www.iec.ch/standardsdev/publications.

In this document, the following print types are used:

– *conformity statements*: *in italic type*.
– terms used throughout this document which have been defined in Clause 3: SMALL ROMAN CAPITALS.

A list of all parts of the IEC 60974 series can be found, under the general title *Arc welding equipment*, on the IEC website.

The committee has decided that the contents of this document will remain unchanged until the stability date indicated on the IEC website under webstore.iec.ch in the data related to the specific document. At this date, the document will be

- reconfirmed,
- withdrawn,
- replaced by a revised edition, or
- amended.

Documents
Document Sharing Hub

Full document details: IEC 60974-12 2022

ARC WELDING EQUIPMENT –

Part 12: Coupling devices for welding cables

1 Scope

This part of IEC 60974 is applicable to COUPLING DEVICES for cables used in arc welding and allied processes, designed for connection and disconnection without using tools.

This part of IEC 60974 specifies safety and performance requirements of COUPLING DEVICES.

This part of IEC 60974 is not applicable to COUPLING DEVICES for underwater welding.

2 Normative references

The following documents are referred to in the text in such a way that some or all of their content constitutes requirements of this document. For dated references, only the edition cited applies. For undated references, the latest edition of the referenced document (including any amendments) applies.

IEC 60050-151, *International Electrotechnical Vocabulary (IEV) – Part 151: Electrical and magnetic devices*

IEC 60529, *Degrees of protection provided by enclosures (IP Code)*

IEC 60974-1:2021, *Arc welding equipment – Part 1: Welding power sources*

3 Terms and definitions

For the purposes of this document, the terms and definitions given in IEC 60050-151 and IEC 60974-1, as well as the following apply.

ISO and IEC maintain terminological databases for use in standardization at the following addresses:

- IEC Electropedia: available at http://www.electropedia.org/
- ISO Online browsing platform: available at http://www.iso.org/obp

3.1
COUPLING DEVICE
device connecting two welding cables together or connecting a welding cable to welding equipment

3.2
RETAINING MEANS
mechanical arrangement that holds the COUPLING DEVICE in position and prevents an unintentional withdrawal, when properly connected

3.3
ARC STRIKING VOLTAGE
voltage superimposed on the welding circuit to ignite the arc

Documents
Document Sharing Hub

Full document details: IEC 60974-12 2022

3.4
ARC STABILIZING VOLTAGE
voltage superimposed on the arc voltage to maintain the arc

4 Environmental conditions

The COUPLING DEVICE shall be capable of operation when the following environmental conditions prevail:

a) range of ambient air temperature:
   – during operation: −10 °C to + 40 °C;
b) relative humidity of the air: up to 90 % at 20 °C.

5 Tests

5.1 Test conditions

All type tests shall be carried out on the same new and completely assembled COUPLING DEVICE.

All type tests shall be carried out at an ambient air temperature between 10 °C and 40 °C.

5.2 Measuring instruments

As specified in 5.2 of IEC 60974-1:2021.

5.3 Test sequence

The type tests given below shall be carried out in the following sequence:

a) general visual inspection;
b) temperature rise, see 8.1;
c) crush strength, see 9.5;
d) insulation resistance, see 7.2;
e) dielectric strength, see 7.3.

The other type tests in this document not mentioned above can be carried out in any convenient sequence.

6 Designation

COUPLING DEVICES shall be designated by the range of cross-sectional area of the welding cable intended to be connected. The test current is given in Table 1 based on maximum cross-section area. The welding COUPLING DEVICE shall accept the minimum cross-sectional area as given in Table 1. It is possible that a reduced minimum cross-sectional area be specified to extend the COUPLING DEVICE fitting range.

NOTE Current capacity of welding cables is given in Table D.4 of EN 50565-1:2014. The 60 % duty cycle current rating relates to 25 °C of this table.

Documents
Document Sharing Hub
Full document details: IEC 60974-12 2022

Table 1 – Relation between COUPLING DEVICE test current and welding cables' cross-sectional area

Range of cross-sectional area mm^2	COUPLING DEVICE test current at 60 % duty cycle A
1 to 6	80
6 to 10	125
10 to 16	150
16 to 25	200
25 to 35	250
35 to 50	300
50 to 70	400
70 to 95	500
95 to 120	600
NOTE Test current is defined in order that COUPLING DEVICE withstands the rated current of the welding cable.	

Conformity shall be checked by measurement.

7 Protection against electric shock

7.1 Voltage rating

COUPLING DEVICES shall be rated in accordance with the process as given in Table 2 and the ARC STRIKING VOLTAGE or ARC STABILIZING VOLTAGE if applicable.

Table 2 – Voltage rating of COUPLING DEVICES

Process	Voltage rating V peak	Insulation resistance MΩ	Dielectric strength V RMS	Degree of protection in accordance with IEC 60529
All processes except plasma cutting	113	2,5	1 000	IP 3X
Plasma cutting	500	2,5	2 100	IP 3X

7.2 Insulation resistance

The insulation resistance of a new COUPLING DEVICE shall, after the humidity treatment, be not less than 2,5 MΩ.

Conformity shall be checked by the following test.

a) Humidity treatment

A humidity cabinet is maintained at a temperature t between 20 °C and 30 °C and a relative humidity between 91 % and 95 %.

The COUPLING DEVICE without cables fitted is brought to a temperature between t and t + 4 K and is then placed for 48 h in the humidity cabinet.

Documents
Document Sharing Hub
Full document details: IEC 60974-12 2022

b) Insulation resistance measurement

Immediately after the humidity treatment, the COUPLING DEVICE is wiped clean and tightly wrapped in a metal foil covering the external surface of the insulation.

The insulation resistance is measured by application of a DC voltage of 500 V between the live parts and the metal foil, the reading being made after stabilization of the measurement.

7.3 Dielectric strength

7.3.1 General requirement

The insulation shall withstand an AC test voltage of 2 100 V RMS for plasma cutting or 1 000 V RMS for all other processes without flashover or break down. Any discharges unaccompanied by a voltage drop are disregarded.

Conformity shall be checked by the following test.

The COUPLING DEVICE is wiped clean and tightly wrapped in a metal foil covering the external surface of the insulation.

The AC test voltage shall be of an approximate sine waveform with a peak value not exceeding 1,45 times the RMS value, having a frequency of 50 Hz or 60 Hz, applied for 1 min between the live parts and the metal foil.

7.3.2 Additional requirements for ARC STRIKING VOLTAGE or ARC STABILIZING VOLTAGE rating

For couplers for use with ARC STRIKING VOLTAGE or ARC STABILIZING VOLTAGE, the insulation shall withstand the rated peak ARC STRIKING VOLTAGE or ARC STABILIZING VOLTAGE as rated by the manufacturer. The insulation shall withstand a high frequency voltage of pulse width 0,2 µs to 8 µs, a repetition frequency of 50 Hz to 300 Hz and shall be 20 % higher than the rated peak ARC STRIKING VOLTAGE or ARC STABILIZING VOLTAGE as determined by the manufacturer.

Conformity shall be checked by the following test.

For couplers intended for use with ARC STRIKING VOLTAGE or ARC STABILIZING VOLTAGE, the couplers shall be subjected to the high-frequency test voltage. The full value of the high-frequency voltage is applied for 2 s between the electrode circuit, and

a) conductive surfaces;

b) other isolated circuits.

Flashover or breakdown shall not occur. Any discharges unaccompanied by a voltage drop (corona) are disregarded.

Alternatively, for couplers intended for use with ARC STRIKING VOLTAGE or ARC STABILIZING VOLTAGE, an AC test voltage of approximately sine waveform at 50 Hz or 60 Hz can be used.

7.4 Protection of live parts against unintentional contact

Parts designed to carry welding current and likely to be live after disconnection shall be recessed to a depth of at least 10 % of the internal diameter of the insulation with a minimum depth of 2 mm with respect to the insulating body.

As a consequence, insulation shall be able to withstand normal service conditions so that the protecting length is maintained during the life of the COUPLING DEVICE.

Conformity shall be checked by linear measurement and visual inspection.

Documents
Document Sharing Hub

Full document details: IEC 60974-12 2022

8 Thermal rating

8.1 Temperature rise

The temperature rise caused by the current passing through a COUPLING DEVICE normally coupled and fitted with an untinned copper welding cable of maximum cross-sectional area as indicated in Table 1 shall not exceed 45 K at the hottest spot of the external surface.

Conformity shall be checked by the following test.

The COUPLING DEVICE is normally coupled and fitted with at least 2 m long welding cables. The COUPLING DEVICE is suspended by its welding cables from two wooden laths 1 m apart, hanging between the two laths in the horizontal plane about 200 mm above the ground in a draught-free area.

A continuous DC current equal to 75 % of the test current (equivalent to approximately 60 % duty cycle) is passed through the COUPLING DEVICE until the rate of the temperature rise does not exceed 2 K/h. During the total test time, the DC current shall be kept constant with a tolerance of ± 2 %.

8.2 Resistance to hot objects

The insulation shall be capable of withstanding hot objects and the effects of a normal amount of weld spatter without being ignited or becoming unsafe.

Conformity shall be checked with a device in accordance with Figure 1.

Dimensions in millimetres

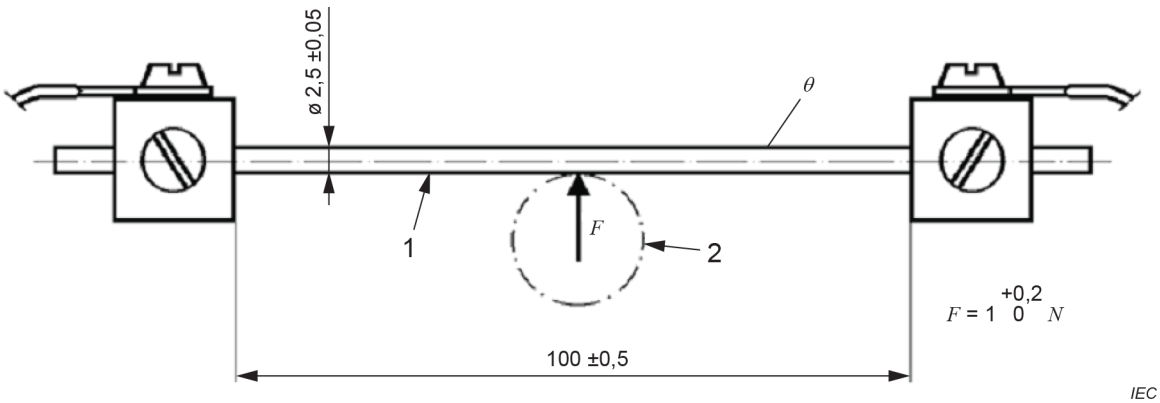

Key

1 18/8 chrome-nickel steel rod

2 COUPLING DEVICE

θ test temperature

Figure 1 – Device for testing the resistance to hot objects

An electric current (of approximately 25 A) is passed through the 18/8 chrome-nickel steel rod until a steady-state temperature θ of $300\,^{+5}_{0}$ °C is reached. During the test, the temperature of the heated rod shall be maintained. This temperature will be measured by a contact thermometer or thermocouple.

The heated rod in a horizontal position is then applied for 2 min to the insulation at the weakest point (for example, minimum insulation thickness and closest distance to live parts). The heated rod shall not penetrate through the insulation and contact live parts.

Documents
Document Sharing Hub
Full document details: IEC 60974-12 2022