# IEC 60974-2

Edition 2.0 2007-11

# INTERNATIONAL STANDARD

# NORME INTERNATIONALE

Withdrawn

## Arc welding equipment – Part 2: Liquid cooling systems

## Matériel de soudage à l'arc – Partie 2: Systèmes de refroidissement par liquide

IEC 60974-2:2007

Documents
Document Sharing Hub

Full document details: IEC 60974-2 2007

**THIS PUBLICATION IS COPYRIGHT PROTECTED**

**Copyright © 2007 IEC, Geneva, Switzerland**

All rights reserved. Unless otherwise specified, no part of this publication may be reproduced or utilized in any form or by any means, electronic or mechanical, including photocopying and microfilm, without permission in writing from either IEC or IEC's member National Committee in the country of the requester.
If you have any questions about IEC copyright or have an enquiry about obtaining additional rights to this publication, please contact the address below or your local IEC member National Committee for further information.

Droits de reproduction réservés. Sauf indication contraire, aucune partie de cette publication ne peut être reproduite ni utilisée sous quelque forme que ce soit et par aucun procédé, électronique ou mécanique, y compris la photocopie et les microfilms, sans l'accord écrit de la CEI ou du Comité national de la CEI du pays du demandeur.
Si vous avez des questions sur le copyright de la CEI ou si vous désirez obtenir des droits supplémentaires sur cette publication, utilisez les coordonnées ci-après ou contactez le Comité national de la CEI de votre pays de résidence.

IEC Central Office
3, rue de Varembé
CH-1211 Geneva 20
Switzerland
Email: inmail@iec.ch
Web: www.iec.ch

## About the IEC

The International Electrotechnical Commission (IEC) is the leading global organization that prepares and publishes International Standards for all electrical, electronic and related technologies.

## About IEC publications

The technical content of IEC publications is kept under constant review by the IEC. Please make sure that you have the latest edition, a corrigenda or an amendment might have been published.

- Catalogue of IEC publications: www.iec.ch/searchpub
The IEC on-line Catalogue enables you to search by a variety of criteria (reference number, text, technical committee,…). It also gives information on projects, withdrawn and replaced publications.
- IEC Just Published: www.iec.ch/online_news/justpub
Stay up to date on all new IEC publications. Just Published details twice a month all new publications released. Available on-line and also by email.
- Electropedia: www.electropedia.org
The world's leading online dictionary of electronic and electrical terms containing more than 20 000 terms and definitions in English and French, with equivalent terms in additional languages. Also known as the International Electrotechnical Vocabulary online.
- Customer Service Centre: www.iec.ch/webstore/custserv
If you wish to give us your feedback on this publication or need further assistance, please visit the Customer Service Centre FAQ or contact us:
Email: csc@iec.ch
Tel.: +41 22 919 02 11
Fax: +41 22 919 03 00

---

## A propos de la CEI

La Commission Electrotechnique Internationale (CEI) est la première organisation mondiale qui élabore et publie des normes internationales pour tout ce qui a trait à l'électricité, à l'électronique et aux technologies apparentées.

## A propos des publications CEI

Le contenu technique des publications de la CEI est constamment revu. Veuillez vous assurer que vous possédez l'édition la plus récente, un corrigendum ou amendement peut avoir été publié.

- Catalogue des publications de la CEI: www.iec.ch/searchpub/cur_fut-f.htm
Le Catalogue en-ligne de la CEI vous permet d'effectuer des recherches en utilisant différents critères (numéro de référence, texte, comité d'études,…). Il donne aussi des informations sur les projets et les publications retirées ou remplacées.
- Just Published CEI: www.iec.ch/online_news/justpub
Restez informé sur les nouvelles publications de la CEI. Just Published détaille deux fois par mois les nouvelles publications parues. Disponible en-ligne et aussi par email.
- Electropedia: www.electropedia.org
Le premier dictionnaire en ligne au monde de termes électroniques et électriques. Il contient plus de 20 000 termes et définitions en anglais et en français, ainsi que les termes équivalents dans les langues additionnelles. Egalement appelé Vocabulaire Electrotechnique International en ligne.
- Service Clients: www.iec.ch/webstore/custserv/custserv_entry-f.htm
Si vous désirez nous donner des commentaires sur cette publication ou si vous avez des questions, visitez le FAQ du Service clients ou contactez-nous:
Email: csc@iec.ch
Tél.: +41 22 919 02 11
Fax: +41 22 919 03 00

Withdrawn

Documents
Document Sharing Hub

Full document details: IEC 60974-2 2007

# IEC 60974-2

Edition 2.0 2007-11

# INTERNATIONAL STANDARD

# NORME INTERNATIONALE

withdrawn

## Arc welding equipment – Part 2: Liquid cooling systems

## Matériel de soudage à l'arc – Partie 2: Systèmes de refroidissement par liquide

INTERNATIONAL ELECTROTECHNICAL COMMISSION

COMMISSION ELECTROTECHNIQUE INTERNATIONALE

PRICE CODE
CODE PRIX

Q

ICS 25.160

ISBN 2-8318-9388-7

Documents
Document Sharing Hub

Full document details: IEC 60974-2 2007

CONTENTS

FOREWORD ..... 4

1 Scope ..... 6
2 Normative references ..... 6
3 Terms and definitions ..... 6
4 Environmental conditions ..... 6
5 Tests ..... 7
5.1 Test conditions ..... 7
5.2 Measuring instruments ..... 7
5.3 Conformity of components ..... 7
5.4 Type tests ..... 7
5.5 Routine tests ..... 7
6 Protection against electric shock ..... 8
6.1 Insulation ..... 8
6.2 Protection against electric shock in normal service (direct contact) ..... 8
6.3 Protection against electric shock in case of a fault condition (indirect contact) ..... 8
6.4 Connection to the input supply network ..... 8
6.5 Leakage current between welding circuit and protective earth ..... 9
7 Mechanical provisions ..... 9
7.1 General ..... 9
7.2 Cooling liquid overflow ..... 9
7.3 Hose coupling devices and hose connections ..... 10
8 Cooling system ..... 10
8.1 Rated maximum pressure ..... 10
8.2 Thermal requirements ..... 10
8.3 Pressure and temperature ..... 10
9 Abnormal operation ..... 10
9.1 General requirements ..... 10
9.2 Stalled test ..... 11
10 Cooling power ..... 11
10.1 Test procedure ..... 11
11 Rating plate ..... 13
11.1 General ..... 13
11.2 Description ..... 13
11.3 Contents ..... 13
11.4 Tolerances ..... 14
12 Instructions ..... 14
12.1 Supplied documents and information ..... 14
13 Marking ..... 15
13.1 General markings ..... 15
13.2 Inlet and outlet ..... 15
13.3 Pressure warning ..... 15

Annex A (informative) Example diagram of built-in and stand-alone liquid cooling systems ..... 16

Withdrawn

AVA Documents
Document Sharing Hub

Full document details: IEC 60974-2 2007

Annex B (informative) Example for a rating plate of stand-alone cooling system ..... 17

Figure 1 – Leakage current measurement configuration ..... 9
Figure 2 – Measuring circuit for determination of the cooling power ..... 12
Figure 3 – Principle of the rating plate of stand-alone cooling systems..... 13
Figure A.1 – Example diagram of built-in liquid cooling systems ..... 16
Figure A.2 – Example diagram of stand-alone liquid cooling systems..... 16

Table 1 – Example of cooling liquid data at 60 °C ..... 12

withdrawn

Documents
Document Sharing Hub

Full document details: IEC 60974-2 2007

INTERNATIONAL ELECTROTECHNICAL COMMISSION

# ARC WELDING EQUIPMENT –

## Part 2: Liquid cooling systems

## FOREWORD

1) The International Electrotechnical Commission (IEC) is a worldwide organization for standardization comprising all national electrotechnical committees (IEC National Committees). The object of IEC is to promote international co-operation on all questions concerning standardization in the electrical and electronic fields. To this end and in addition to other activities, IEC publishes International Standards, Technical Specifications, Technical Reports, Publicly Available Specifications (PAS) and Guides (hereafter referred to as "IEC Publication(s)"). Their preparation is entrusted to technical committees; any IEC National Committee interested in the subject dealt with may participate in this preparatory work. International, governmental and non-governmental organizations liaising with the IEC also participate in this preparation. IEC collaborates closely with the International Organization for Standardization (ISO) in accordance with conditions determined by agreement between the two organizations.
2) The formal decisions or agreements of IEC on technical matters express, as nearly as possible, an international consensus of opinion on the relevant subjects since each technical committee has representation from all interested IEC National Committees.
3) IEC Publications have the form of recommendations for international use and are accepted by IEC National Committees in that sense. While all reasonable efforts are made to ensure that the technical content of IEC Publications is accurate, IEC cannot be held responsible for the way in which they are used or for any misinterpretation by any end user.
4) In order to promote international uniformity, IEC National Committees undertake to apply IEC Publications transparently to the maximum extent possible in their national and regional publications. Any divergence between any IEC Publication and the corresponding national or regional publication shall be clearly indicated in the latter.
5) IEC provides no marking procedure to indicate its approval and cannot be rendered responsible for any equipment declared to be in conformity with an IEC Publication.
6) All users should ensure that they have the latest edition of this publication.
7) No liability shall attach to IEC or its directors, employees, servants or agents including individual experts and members of its technical committees and IEC National Committees for any personal injury, property damage or other damage of any nature whatsoever, whether direct or indirect, or for costs (including legal fees) and expenses arising out of the publication, use of, or reliance upon, this IEC Publication or any other IEC Publications.
8) Attention is drawn to the Normative references cited in this publication. Use of the referenced publications is indispensable for the correct application of this publication.
9) Attention is drawn to the possibility that some of the elements of this IEC Publication may be the subject of patent rights. IEC shall not be held responsible for identifying any or all such patent rights.

International Standard IEC 60974-2 has been prepared by IEC technical committee 26: Electric welding.

This second edition cancels and replaces the first edition published in 2002 and constitutes a technical revision.

This edition includes the following significant technical changes with respect to the previous edition:

– changes induced by the publication of IEC 60974-1, edition 3;
– introduction of a set-up for torch simulation during leakage test;
– complementary requirement for attachment plug in 125 V supply network;
– introduction of new items in instructions;
– correction of density value for water/alcohol (50/50);
– improvement of rating plate example.

Withdrawn

AVA Documents
Document Sharing Hub

Full document details: IEC 60974-2 2007

The text of this standard is based on the following documents:

| FDIS | Report on voting |
|---|---|
| 26/362/FDIS | 26/366/RVD |

Full information on the voting for the approval of this standard can be found in the report on voting indicated in the above table.

This publication has been drafted in accordance with the ISO/IEC Directives, Part 2.

This standard shall be used in conjunction with IEC 60974-1.

The list of all parts of IEC 60974, under the general title *Arc welding equipment*, can be found on the IEC web site.

The committee has decided that the contents of this publication will remain unchanged until the maintenance result date indicated on the IEC web site under "http://webstore.iec.ch" in the data related to the specific publication. At this date, the publication will be

- reconfirmed,
- withdrawn,
- replaced by a revised edition, or
- amended.

withdrawn

Documents
Document Sharing Hub

Full document details: IEC 60974-2 2007

# ARC WELDING EQUIPMENT –

## Part 2: Liquid cooling systems

Withdrawn

## 1 Scope

This part of IEC 60974 specifies safety and construction requirements for industrial and professional liquid cooling systems used in arc welding and allied processes to cool torches.

This part of IEC 60974 is applicable to stand-alone liquid cooling systems that are either connected to a separate welding power source or built into the welding power source enclosure.

This part of IEC 60974 is not applicable to refrigerated cooling systems.

NOTE 1 Typical allied processes are, for example, plasma arc cutting and arc spraying.

NOTE 2 This part of IEC 60974 does not include electromagnetic compatibility (EMC) requirements.

## 2 Normative references

The following referenced documents are indispensable for the application of this document. For dated references, only the edition cited applies. For undated references, the latest edition of the referenced document (including any amendments) applies.

IEC 60974-1:2005, *Arc-welding equipment – Part 1: Welding power sources*

IEC 60974-7:2005, *Arc-welding equipment – Part 7: Torches*

IEC 60974-10, *Arc welding equipment – Part 10: Electromagnetic compatibility (EMC) requirements*

## 3 Terms and definitions

For the purposes of this document, the terms and definitions given in IEC 60974-1 and IEC 60974-7, as well as the following. apply.

**3.1**
**cooling power**
***P***
cooling energy related to the mass flow rate

**3.2**
**liquid cooling system**
system that circulates and cools liquid used for decreasing the temperature of equipment of arc welding and allied processes

## 4 Environmental conditions

See Clause 4 of IEC 60974-1.

AVA Documents
Document Sharing Hub

Full document details: IEC 60974-2 2007

# 5 Tests

## 5.1 Test conditions

See 5.1 of IEC 60974-1.

Stand-alone cooling systems may be tested without a welding power source.

Built-in cooling systems shall be tested with the welding power source.

## 5.2 Measuring instruments

The accuracy of measuring instruments shall be as follows.

a) Electrical measuring instruments: class 0,5 (±0,5 % of full-scale reading), except for the measurement of insulation resistance and dielectric strength where the accuracy of the instruments is not specified, but shall be taken into account for the measurement.

b) Thermometer: ±2 K.

c) Pressure measuring instruments: class 2,5.

d) Flow-rate measuring instruments: class 2,5.

## 5.3 Conformity of components

See 5.3 of IEC 60974-1.

## 5.4 Type tests

All type tests shall be carried out on the same cooling system unless specified otherwise.

As a condition of conformity the type tests given below shall be carried out in the following sequence:

a) general visual inspection (see 3.7 of IEC 60974-1);

b) protection provided by the enclosure (see 6.2.1 of IEC 60974-1);

c) mechanical provisions (see Clause 7);

d) insulation resistance (see 6.1.4);

e) dielectric strength (see 6.1.5).

The other tests included in this standard and not listed here may be carried out in any convenient sequence.

## 5.5 Routine tests

All routine tests given below shall be carried out on each cooling system in the following sequence:

a) general visual inspection (see 3.7 of IEC 60974-1);

b) continuity of the protective circuit (see 10.4.2 of IEC 60974-1);

c) dielectric strength (see 6.1.5);

d) general visual inspection (see 3.7 of IEC 60974-1; for example leaks of cooling liquid and flow or pressure sensor operation as specified by the manufacturer.

Withdrawn

Documents
Document Sharing Hub

Full document details: IEC 60974-2 2007

# 6 Protection against electric shock

## 6.1 Insulation

### 6.1.1 General

See 6.1.1 of IEC 60974-1.

### 6.1.2 Clearances

See 6.1.2 of IEC 60974-1.

### 6.1.3 Creepage distances

See 6.1.3 of IEC 60974-1.

### 6.1.4 Insulation resistance

See 6.1.4 of IEC 60974-1.

The test may be carried out without cooling liquid.

### 6.1.5 Dielectric strength

See 6.1.5 of IEC 60974-1.

The test may be carried out without cooling liquid.

## 6.2 Protection against electric shock in normal service (direct contact)

See 6.2 of IEC 60974-1.

## 6.3 Protection against electric shock in case of a fault condition (indirect contact)

### 6.3.1 Protective provisions

See 6.3.1 of IEC 60974-1.

### 6.3.2 Isolation of the supply circuit and the welding circuit

See 6.3.2 of IEC 60974-1.

### 6.3.3 Insulation between windings of the supply circuit and the welding circuit

See 6.3.3 of IEC 60974-1.

### 6.3.4 Internal conductors and connections

See 6.3.4 of IEC 60974-1.

### 6.3.5 Primary leakage current

See 6.3.7 of IEC 60974-1.

## 6.4 Connection to the input supply network

See Clause 10 of IEC 60974-1.

Withdrawn

AVA Documents
Document Sharing Hub

Full document details: IEC 60974-2 2007

Additionally, for 125 V input supply networks, the current rating of the attachment plug shall be not less than 70 % of the supply current, as measured with the fan motor or pump stalled, whichever is greater.

### 6.5 Leakage current between welding circuit and protective earth

With the cooling system filled with the cooling liquid specified by the manufacturer (see 12.1e)), the leakage current from the torch to the protective earth connection of the cooling system shall not exceed 10 mA d.c.

The design of the torch can influence the leakage current value; therefore, a conventional copper pipe shall be used to simulate the torch during the conformity test.

*Conformity shall be checked* by applying a d.c. voltage of 500 V at room temperature between the protective earth connection and a copper pipe to simulate the torch connected to the output of the cooling system by a hose with a maximum length of 0,5 m as shown in Figure 1. The minimum inner diameter of the hose shall be 5 mm. The minimum length of the copper pipe shall be 10 cm with a minimum internal diameter of 5 mm. The cooling system and the simulated torch are filled with liquid for the test. The pump is operating.

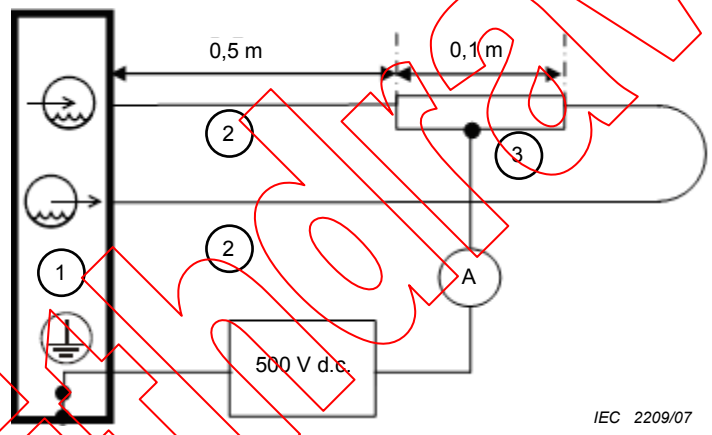


Key

1 Liquid cooling system

2 Hose

3 Copper pipe

**Figure 1 – Leakage current measurement configuration**

## 7 Mechanical provisions

### 7.1 General

See Clause 14 of IEC 60974-1.

The test shall be carried out with cooling liquid.

### 7.2 Cooling liquid overflow

When filling the cooling system in accordance with the manufacturer's instructions, overflow or spillage shall not result in electric shock.

Documents
Document Sharing Hub
Full document details: IEC 60974-2 2007

*Conformity shall be checked* by the following treatment and test. The liquid container is completely filled. A further quantity of liquid equal to 15 % of the capacity of the container or 0,25 l, whichever is the greater, is then poured in steadily over a period not to exceed 60 s. Immediately after this treatment, the equipment shall pass the dielectric strength test of 6.1.5 between input circuits and exposed conductive parts.

### 7.3 Hose coupling devices and hose connections

If hose coupling devices or hose connections, which often have to be undone, are placed above or near to live parts, these live parts shall be protected from cooling liquid by splash proof enclosures, with drains or other appropriate measures. An exception is made for live parts of the welding circuit.

## 8 Cooling system

### 8.1 Rated maximum pressure

The manufacturer shall determine the rated maximum pressure attainable by the cooling system (see 11.3c), box 12).

*Conformity shall be checked* by measuring the pressure when the outlet is blocked.

### 8.2 Thermal requirements

#### 8.2.1 Heating test

Liquid cooling systems shall be capable of operating at rated cooling power without causing any component to exceed its rated temperature.

*Conformity shall be checked* in accordance with Clause 10.

#### 8.2.2 Tolerances of test parameters

a) $p$ pressure: $p^{+10\,\%}_{-2\,\%}$

b) $q_V$ volume flow: $q_V{}^{+10\,\%}_{-2\,\%}$

c) $T$ temperature: $T \pm 2$ K

#### 8.2.3 Duration of test

See 7.1.3 of IEC 60974-1.

### 8.3 Pressure and temperature

Liquid cooling systems shall be capable of operating without leakage at the maximum pressure with a cooling liquid temperature of 70 °C.

*Conformity shall be checked* by visual inspection during 120 s of operation or until shutdown by a protection system, immediately following the heating test while the outlet of the cooling system is blocked.

## 9 Abnormal operation

### 9.1 General requirements

A cooling system shall not suffer hazardous electrical breakdown or cause a risk of fire under the conditions of operation of 9.2. These tests are conducted without regard to temperature attained on any part, or the continued proper functioning of the cooling system. The only

Withdrawn

AVA Documents Document Sharing Hub

Full document details: IEC 60974-2 2007