IEC 60974-2

Edition 4.0 2019-01

INTERNATIONAL STANDARD

NORME INTERNATIONALE

Arc welding equipment – Part 2: Liquid cooling systems

Matériel de soudage à l'arc – Partie 2: Systèmes de refroidissement par liquide

IEC 60974-2:2019-01(en-fr)

Documents
Document Sharing Hub

Full document details: IEC 60974-2 2019

THIS PUBLICATION IS COPYRIGHT PROTECTED
Copyright © 2019 IEC, Geneva, Switzerland

All rights reserved. Unless otherwise specified, no part of this publication may be reproduced or utilized in any form or by any means, electronic or mechanical, including photocopying and microfilm, without permission in writing from either IEC or IEC's member National Committee in the country of the requester. If you have any questions about IEC copyright or have an enquiry about obtaining additional rights to this publication, please contact the address below or your local IEC member National Committee for further information.

Droits de reproduction réservés. Sauf indication contraire, aucune partie de cette publication ne peut être reproduite ni utilisée sous quelque forme que ce soit et par aucun procédé, électronique ou mécanique, y compris la photocopie et les microfilms, sans l'accord écrit de l'IEC ou du Comité national de l'IEC du pays du demandeur. Si vous avez des questions sur le copyright de l'IEC ou si vous désirez obtenir des droits supplémentaires sur cette publication, utilisez les coordonnées ci-après ou contactez le Comité national de l'IEC de votre pays de résidence.

IEC Central Office
3, rue de Varembé
CH-1211 Geneva 20
Switzerland

Tel.: +41 22 919 02 11
info@iec.ch
www.iec.ch

About the IEC
The International Electrotechnical Commission (IEC) is the leading global organization that prepares and publishes International Standards for all electrical, electronic and related technologies.

About IEC publications
The technical content of IEC publications is kept under constant review by the IEC. Please make sure that you have the latest edition, a corrigendum or an amendment might have been published.

IEC publications search - webstore.iec.ch/advsearchform
The advanced search enables to find IEC publications by a variety of criteria (reference number, text, technical committee,…). It also gives information on projects, replaced and withdrawn publications.

IEC Just Published - webstore.iec.ch/justpublished
Stay up to date on all new IEC publications. Just Published details all new publications released. Available online and once a month by email.

IEC Customer Service Centre - webstore.iec.ch/csc
If you wish to give us your feedback on this publication or need further assistance, please contact the Customer Service Centre: sales@iec.ch.

Electropedia - www.electropedia.org
The world's leading online dictionary on electrotechnology, containing more than 22 000 terminological entries in English and French, with equivalent terms in 16 additional languages. Also known as the International Electrotechnical Vocabulary (IEV) online.

IEC Glossary - std.iec.ch/glossary
67 000 electrotechnical terminology entries in English and French extracted from the Terms and Definitions clause of IEC publications issued since 2002. Some entries have been collected from earlier publications of IEC TC 37, 77, 86 and CISPR.

A propos de l'IEC
La Commission Electrotechnique Internationale (IEC) est la première organisation mondiale qui élabore et publie des Normes internationales pour tout ce qui a trait à l'électricité, à l'électronique et aux technologies apparentées.

A propos des publications IEC
Le contenu technique des publications IEC est constamment revu. Veuillez vous assurer que vous possédez l'édition la plus récente, un corrigendum ou amendement peut avoir été publié.

Recherche de publications IEC - webstore.iec.ch/advsearchform
La recherche avancée permet de trouver des publications IEC en utilisant différents critères (numéro de référence, texte, comité d'études,…). Elle donne aussi des informations sur les projets et les publications remplacées ou retirées.

IEC Just Published - webstore.iec.ch/justpublished
Restez informé sur les nouvelles publications IEC. Just Published détaille les nouvelles publications parues. Disponible en ligne et une fois par mois par email.

Service Clients - webstore.iec.ch/csc
Si vous désirez nous donner des commentaires sur cette publication ou si vous avez des questions contactez-nous: sales@iec.ch.

Electropedia - www.electropedia.org
Le premier dictionnaire d'électrotechnologie en ligne au monde, avec plus de 22 000 articles terminologiques en anglais et en français, ainsi que les termes équivalents dans 16 langues additionnelles. Egalement appelé Vocabulaire Electrotechnique International (IEV) en ligne.

Glossaire IEC - std.iec.ch/glossary
67 000 entrées terminologiques électrotechniques, en anglais et en français, extraites des articles Termes et Définitions des publications IEC parues depuis 2002. Plus certaines entrées antérieures extraites des publications des CE 37, 77, 86 et CISPR de l'IEC.

AVA Documents
Document Sharing Hub

Full document details: IEC 60974-2 2019

IEC 60974-2

Edition 4.0 2019-01

INTERNATIONAL STANDARD

NORME INTERNATIONALE

Arc welding equipment – Part 2: Liquid cooling systems

Matériel de soudage à l'arc – Partie 2: Systèmes de refroidissement par liquide

INTERNATIONAL
ELECTROTECHNICAL
COMMISSION

COMMISSION
ELECTROTECHNIQUE
INTERNATIONALE

ICS 25.160.30

ISBN 978-2-8322-6497-3

Warning! Make sure that you obtained this publication from an authorized distributor.
Attention! Veuillez vous assurer que vous avez obtenu cette publication via un distributeur agréé.

® Registered trademark of the International Electrotechnical Commission
Marque déposée de la Commission Electrotechnique Internationale

Documents
Document Sharing Hub

Full document details: IEC 60974-2 2019

CONTENTS

FOREWORD 4
1 Scope 6
2 Normative references 6
3 Terms and definitions 6
4 Environmental conditions 7
5 Tests 7
5.1 Test conditions 7
5.2 Measuring instruments 7
5.3 Conformity of components 7
5.4 Type tests 7
5.5 Routine tests 7
6 Protection against electric shock 8
6.1 Insulation 8
6.1.1 General 8
6.1.2 Clearances 8
6.1.3 Creepage distances 8
6.1.4 Insulation resistance 8
6.1.5 Dielectric strength 8
6.2 Protection against electric shock in normal service (direct contact) 8
6.3 Protection against electric shock in case of a fault condition (indirect contact) 8
6.3.1 Protective provisions 8
6.3.2 Isolation between windings of the supply circuit and the welding circuit 8
6.3.3 Internal conductors and connections 8
6.3.4 Touch current in fault condition 8
6.4 Connection to the supply network 8
6.4.1 Supply voltage 8
6.4.2 Multi-supply voltage 9
6.4.3 Means of connection to the supply circuit 9
6.4.4 Marking of terminals 9
6.4.5 Protective circuit 9
6.4.6 Cable anchorage 9
6.4.7 Inlet openings 9
6.4.8 Supply circuit on/off switching device 9
6.4.9 Supply cables 9
6.4.10 Supply coupling device (attachment plug) 9
6.5 Leakage current between welding circuit and protective earth 9
7 Mechanical provisions 10
7.1 General 10
7.2 Cooling liquid overflow 10
7.3 Hose coupling devices and hose connections 10
8 Cooling system 10
8.1 Rated maximum pressure 10
8.2 Thermal requirements 11
8.2.1 Heating test 11
8.2.2 Tolerances of test parameters 11

AVA Documents
Document Sharing Hub

Full document details: IEC 60974-2 2019

8.2.3 Duration of test 11
8.3 Pressure and temperature 11
9 Abnormal operation 11
9.1 General requirements 11
9.2 Stalled test 12
10 COOLING POWER 12
11 Rating plate 13
11.1 General 13
11.2 Description 13
11.3 Contents 14
11.4 Tolerances 15
12 Instructions and markings 15
12.1 Instructions 15
12.2 Markings 16
12.2.1 General 16
12.2.2 Inlet and outlet 16
12.2.3 Pressure warning 16
Annex A (informative) Example diagram of built-in and stand-alone LIQUID COOLING SYSTEMS 17
Annex B (informative) Example for a rating plate of stand-alone cooling system 18

Figure 1 – Leakage current measurement configuration 10
Figure 2 – Measuring circuit for determination of the COOLING POWER 13
Figure 3 – Principle of the rating plate of stand-alone cooling systems 14
Figure A.1 – Example diagram of built-in LIQUID COOLING SYSTEMS 17
Figure A.2 – Example diagram of stand-alone LIQUID COOLING SYSTEMS 17
Figure B.1 – Single-phase stand-alone cooling unit 18

Table 1 – Example of cooling liquid data at 60 °C 13

Documents
Document Sharing Hub
Full document details: IEC 60974-2 2019

INTERNATIONAL ELECTROTECHNICAL COMMISSION

ARC WELDING EQUIPMENT –

Part 2: Liquid cooling systems

FOREWORD

1) The International Electrotechnical Commission (IEC) is a worldwide organization for standardization comprising all national electrotechnical committees (IEC National Committees). The object of IEC is to promote international co-operation on all questions concerning standardization in the electrical and electronic fields. To this end and in addition to other activities, IEC publishes International Standards, Technical Specifications, Technical Reports, Publicly Available Specifications (PAS) and Guides (hereafter referred to as "IEC Publication(s)"). Their preparation is entrusted to technical committees; any IEC National Committee interested in the subject dealt with may participate in this preparatory work. International, governmental and non-governmental organizations liaising with the IEC also participate in this preparation. IEC collaborates closely with the International Organization for Standardization (ISO) in accordance with conditions determined by agreement between the two organizations.
2) The formal decisions or agreements of IEC on technical matters express, as nearly as possible, an international consensus of opinion on the relevant subjects since each technical committee has representation from all interested IEC National Committees.
3) IEC Publications have the form of recommendations for international use and are accepted by IEC National Committees in that sense. While all reasonable efforts are made to ensure that the technical content of IEC Publications is accurate, IEC cannot be held responsible for the way in which they are used or for any misinterpretation by any end user.
4) In order to promote international uniformity, IEC National Committees undertake to apply IEC Publications transparently to the maximum extent possible in their national and regional publications. Any divergence between any IEC Publication and the corresponding national or regional publication shall be clearly indicated in the latter.
5) IEC itself does not provide any attestation of conformity. Independent certification bodies provide conformity assessment services and, in some areas, access to IEC marks of conformity. IEC is not responsible for any services carried out by independent certification bodies.
6) All users should ensure that they have the latest edition of this publication.
7) No liability shall attach to IEC or its directors, employees, servants or agents including individual experts and members of its technical committees and IEC National Committees for any personal injury, property damage or other damage of any nature whatsoever, whether direct or indirect, or for costs (including legal fees) and expenses arising out of the publication, use of, or reliance upon, this IEC Publication or any other IEC Publications.
8) Attention is drawn to the Normative references cited in this publication. Use of the referenced publications is indispensable for the correct application of this publication.
9) Attention is drawn to the possibility that some of the elements of this IEC Publication may be the subject of patent rights. IEC shall not be held responsible for identifying any or all such patent rights.

International Standard IEC 60974-2 has been prepared by IEC technical committee 26: Electric welding.

This fourth edition cancels and replaces the third edition published in 2013 and constitutes a technical revision.

This edition includes the following significant technical changes with respect to the previous edition:

a) changes induced by the publication of IEC 60974-1:2017;
b) reference in 11.1 changed.

Documents
Document Sharing Hub
Full document details: IEC 60974-2 2019

The text of this International Standard is based on the following documents:

FDIS	Report on voting
26/670/FDIS	26/675/RVD

Full information on the voting for the approval of this International Standard can be found in the report on voting indicated in the above table.

This document has been drafted in accordance with the ISO/IEC Directives, Part 2.

In this standard, the following print types are used:

– conformity statements: *in italic type.*
– terms used throughout this standard which have been defined in clause 3: SMALL ROMAN CAPITALS.

This document shall be used in conjunction with IEC 60974-1:2017.

A list of all parts of IEC 60974, under the general title *Arc welding equipment*, can be found on the IEC web site.

The committee has decided that the contents of this document will remain unchanged until the stability date indicated on the IEC website under "http://webstore.iec.ch" in the data related to the specific document. At this date, the document will be

- reconfirmed,
- withdrawn,
- replaced by a revised edition, or
- amended.

Documents
Document Sharing Hub

Full document details: IEC 60974-2 2019

ARC WELDING EQUIPMENT –

Part 2: Liquid cooling systems

1 Scope

This part of IEC 60974 specifies safety and construction requirements for industrial and professional LIQUID COOLING SYSTEMS used in arc welding and allied processes to cool torches.

This document is applicable to LIQUID COOLING SYSTEMS which are stand-alone (separate from the welding equipment) or built-in (housed in a single enclosure with other welding equipment).

This document is not applicable to refrigerated cooling systems.

NOTE 1 Typical allied processes are electric arc cutting and arc spraying.

NOTE 2 This part of IEC 60974 does not include electromagnetic compatibility (EMC) requirements that are given in IEC 60974-10.

2 Normative references

The following documents are referred to in the text in such a way that some or all of their content constitutes requirements of this document. For dated references, only the edition cited applies. For undated references, the latest edition of the referenced document (including any amendments) applies.

IEC 60974-1:2017, *Arc welding equipment – Part 1: Welding power sources*

IEC 60974-7:2013, *Arc welding equipment – Part 7: Torches*

IEC 60974-10:2014, *Arc welding equipment – Part 10: Electromagnetic compatibility (EMC) requirements*

3 Terms and definitions

For the purposes of this document, the terms and definitions given in IEC 60974-1 and IEC 60974-7 and the following apply.

ISO and IEC maintain terminological databases for use in standardization at the following addresses:

- IEC Electropedia: available at http://www.electropedia.org/
- ISO Online browsing platform: available at http://www.iso.org/obp

3.1
cooling power
P
power related to the coolant flow rate and temperature rise

3.2
liquid cooling system
system that circulates and cools liquid used for decreasing the temperature of torches

AVA Documents
Document Sharing Hub

Full document details: IEC 60974-2 2019

3.3
cooling power at 1 l/min
$P_{1\ \mathrm{l/min}}$
COOLING POWER at 1 l/min flow rate defined for comparison

4 Environmental conditions

As specified in Clause 4 of IEC 60974-1:2017.

5 Tests

5.1 Test conditions

As specified in 5.1 of IEC 60974-1:2017.

Stand-alone cooling systems may be tested without a welding power source.

Built-in cooling systems shall be tested with the welding power source.

5.2 Measuring instruments

The accuracy of measuring instruments shall be:

a) electrical measuring instruments: class 1 (± 1 % of full-scale reading), except for the measurement of insulation resistance and dielectric strength where the accuracy of the instruments is not specified, but shall be taken into account for the measurement;

b) thermometer: ± 2 K;

c) pressure measuring instruments: class 2,5 (± 2,5 % of full-scale reading);

d) flow-rate measuring instruments: class 2,5 (± 2,5 % of full-scale reading).

5.3 Conformity of components

As specified in 5.3 of IEC 60974-1:2017.

5.4 Type tests

All type tests shall be carried out on the same cooling system unless specified otherwise.

As a condition of conformity the type tests given below shall be carried out in the following sequence:

a) general visual inspection (as defined in 3.1.7 of IEC 60974-1:2017);

b) mechanical provisions (as specified in Clause 7);

c) protection provided by the enclosure (as specified in 6.2.1 of IEC 60974-1:2017);

d) insulation resistance (as specified in 6.1.4);

e) dielectric strength (as specified in 6.1.5).

The other tests included in this document and not listed here may be carried out in any convenient sequence.

5.5 Routine tests

All routine tests given below shall be carried out on each cooling system in the following sequence:

a) visual inspection in accordance with manufacturer's specification;

Documents
Document Sharing Hub
Full document details: IEC 60974-2 2019

b) continuity of the protective circuit (as specified in 10.5.3 of IEC 60974-1:2017);
c) dielectric strength (as specified in 6.1.5).

6 Protection against electric shock

6.1 Insulation

6.1.1 General

As specified in 6.1.1 of IEC 60974-1:2017.

6.1.2 Clearances

As specified in 6.1.2 of IEC 60974-1:2017.

6.1.3 Creepage distances

As specified in 6.1.3 of IEC 60974-1:2017.

6.1.4 Insulation resistance

As specified in 6.1.4 of IEC 60974-1:2017.

The test may be carried out without cooling liquid.

6.1.5 Dielectric strength

As specified in 6.1.5 of IEC 60974-1:2017.

The test may be carried out without cooling liquid.

6.2 Protection against electric shock in normal service (direct contact)

As specified in 6.2 of IEC 60974-1:2017.

6.3 Protection against electric shock in case of a fault condition (indirect contact)

6.3.1 Protective provisions

As specified in 6.3.1 of IEC 60974-1:2017.

6.3.2 Isolation between windings of the supply circuit and the welding circuit

As specified in 6.3.2 of IEC 60974-1:2017.

6.3.3 Internal conductors and connections

As specified in 6.3.3 of IEC 60974-1:2017.

6.3.4 Touch current in fault condition

As specified in 6.3.6 of IEC 60974-1:2017.

6.4 Connection to the supply network

6.4.1 Supply voltage

As specified in 10.1 of IEC 60974-1:2017.

Documents
Document Sharing Hub

Full document details: IEC 60974-2 2019

6.4.2 Multi-supply voltage

As specified in 10.2 of IEC 60974-1:2017.

6.4.3 Means of connection to the supply circuit

As specified in 10.3 of IEC 60974-1:2017.

6.4.4 Marking of terminals

As specified in 10.4 of IEC 60974-1:2017.

6.4.5 Protective circuit

As specified in 10.5 of IEC 60974-1:2017.

6.4.6 Cable anchorage

As specified in 10.6 of IEC 60974-1:2017.

6.4.7 Inlet openings

As specified in 10.7 of IEC 60974-1:2017.

6.4.8 Supply circuit on/off switching device

As specified in 10.8 of IEC 60974-1:2017.

6.4.9 Supply cables

As specified in 10.9 of IEC 60974-1:2017.

6.4.10 Supply coupling device (attachment plug)

If a supply coupling device is provided as a part of the LIQUID COOLING SYSTEM, its rated values shall be not less than the maximum effective supply current $I_{1\text{eff}}$.

For supply networks up to 125 V, the rated current shall, additionally, not be less than either a) or b):

a) 70 % of the rated maximum supply current;

b) 70 % of the supply current, as measured with the fan motor or pump stalled, whichever is greater.

Conformity shall be checked by visual inspection, measurement and calculation.

6.5 Leakage current between welding circuit and protective earth

With the cooling system filled with the cooling liquid specified by the manufacturer (see 12.1 e)), the leakage current from the torch to the protective earth connection of the cooling system shall not exceed 10 mA DC.

Conformity shall be checked by applying a DC voltage of 500 V at room temperature between the protective earth connection and a copper pipe to simulate the torch connected to the outlet of the cooling system by a hose with a maximum length of 0,5 m as shown in Figure 1. The minimum inner diameter of the hose shall be 5 mm. The minimum length of the copper pipe shall be 10 cm with a minimum internal diameter of 5 mm. The cooling system and the simulated torch are filled with liquid for the test. The pump is operating.

Documents
Document Sharing Hub

Full document details: IEC 60974-2 2019

NOTE The design of the torch can influence the leakage current value; therefore, a conventional copper pipe is used to simulate the torch during the conformity test.

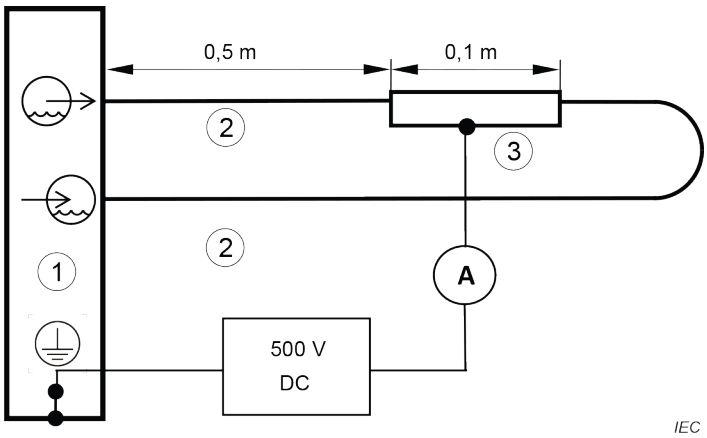

Key

1 LIQUID COOLING SYSTEM

2 Hose

3 Copper pipe

Figure 1 – Leakage current measurement configuration

7 Mechanical provisions

7.1 General

As specified in Clause 14 of IEC 60974-1:2017.

The test shall be carried out with cooling liquid.

7.2 Cooling liquid overflow

When filling the cooling system in accordance with the manufacturer's instructions, overflow or spillage shall not result in electric shock.

Conformity shall be checked by the following treatment and test. The liquid container is completely filled. A further quantity of liquid equal to 15 % of the capacity of the container or 0,25 l, whichever is the greater, is then poured in steadily over a period not to exceed 60 s. Immediately after this treatment, the equipment shall pass the dielectric strength test of 6.1.5 between input circuits and exposed conductive parts.

7.3 Hose coupling devices and hose connections

If hose coupling devices or hose connections, which often have to be undone, are placed above or near to live parts, these live parts shall be protected from cooling liquid by splash proof enclosures, with drains or other appropriate measures. An exception is made for live parts of the welding circuit.

8 Cooling system

8.1 Rated maximum pressure

The manufacturer shall determine the rated maximum pressure attainable by the cooling system (see 11.3 c), box 12).

Conformity shall be checked by measuring the pressure when the outlet is blocked.

AVA Documents
Document Sharing Hub

8.2 Thermal requirements

8.2.1 Heating test

LIQUID COOLING SYSTEMS shall be capable of operating at rated COOLING POWER without causing any component to exceed its rated temperature.

Conformity shall be checked in accordance with Clause 10.

8.2.2 Tolerances of test parameters

a) p pressure: $p^{+10\,\%}_{-2\,\%}$

b) q_v volume flow: $q_{v\,-2\,\%}^{+10\,\%}$

c) T temperature: $T \pm 2$ K

8.2.3 Duration of test

As specified in 7.1.3 of IEC 60974-1:2017.

8.3 Pressure and temperature

LIQUID COOLING SYSTEMS shall be capable of operating without leakage at the maximum pressure with a cooling liquid temperature of 70 °C.

Conformity shall be checked by visual inspection during 120 s of operation or until shutdown by a protection system, immediately following the heating test while the outlet of the cooling system is blocked.

9 Abnormal operation

9.1 General requirements

A cooling system shall not break down and increase the risk of electric shock or fire under the conditions of operation of 9.2. These tests are conducted without regard to temperature attained on any part, or the continued proper functioning of the cooling system. The only criterion is that the cooling system does not become unsafe. These tests may be conducted on any cooling system that functions correctly.

The cooling system, protected internally by, for example, a circuit-breaker or thermal protection, meets this requirement if the protection device operates before an unsafe condition occurs.

Conformity shall be checked by the following tests.

a) A layer of dry absorbent surgical type cotton is placed under the cooling system, extending beyond each side for a distance of 150 mm.

b) Starting from the cold state, the cooling system is operated in accordance with 9.2.

c) During the test, the cooling system shall not emit flames, molten metal or other materials that ignite the cotton indicator.

d) Following the test and within 5 min, the cooling system shall be capable of withstanding a dielectric test in accordance with 6.1.5 b) of IEC 60974-1:2017.

Documents
Document Sharing Hub
Full document details: IEC 60974-2 2019