IEC 60974-4

Edition 2.0 2010-08

INTERNATIONAL STANDARD

NORME INTERNATIONALE

withdrawn

Arc welding equipment – Part 4: Periodic inspection and testing

Matériel de soudage à l'arc – Partie 4: Inspection et essais périodiques

IEC 60974-4:2010

Documents
Document Sharing Hub

Full document details: IEC 60974-4 2010

THIS PUBLICATION IS COPYRIGHT PROTECTED

Copyright © 2010 IEC, Geneva, Switzerland

All rights reserved. Unless otherwise specified, no part of this publication may be reproduced or utilized in any form or by any means, electronic or mechanical, including photocopying and microfilm, without permission in writing from either IEC or IEC's member National Committee in the country of the requester.
If you have any questions about IEC copyright or have an enquiry about obtaining additional rights to this publication, please contact the address below or your local IEC member National Committee for further information.

Droits de reproduction réservés. Sauf indication contraire, aucune partie de cette publication ne peut être reproduite ni utilisée sous quelque forme que ce soit et par aucun procédé, électronique ou mécanique, y compris la photocopie et les microfilms, sans l'accord écrit de la CEI ou du Comité national de la CEI du pays du demandeur.
Si vous avez des questions sur le copyright de la CEI ou si vous désirez obtenir des droits supplémentaires sur cette publication, utilisez les coordonnées ci-après ou contactez le Comité national de la CEI de votre pays de résidence.

IEC Central Office
3, rue de Varembé
CH-1211 Geneva 20
Switzerland
Email: inmail@iec.ch
Web: www.iec.ch

About the IEC

The International Electrotechnical Commission (IEC) is the leading global organization that prepares and publishes International Standards for all electrical, electronic and related technologies.

About IEC publications

The technical content of IEC publications is kept under constant review by the IEC. Please make sure that you have the latest edition, a corrigenda or an amendment might have been published.

- Catalogue of IEC publications: www.iec.ch/searchpub
The IEC on-line Catalogue enables you to search by a variety of criteria (reference number, text, technical committee,…). It also gives information on projects, withdrawn and replaced publications.
- IEC Just Published: www.iec.ch/online_news/justpub
Stay up to date on all new IEC publications. Just Published details twice a month all new publications released. Available on-line and also by email.
- Electropedia: www.electropedia.org
The world's leading online dictionary of electronic and electrical terms containing more than 20 000 terms and definitions in English and French, with equivalent terms in additional languages. Also known as the International Electrotechnical Vocabulary online.
- Customer Service Centre: www.iec.ch/webstore/custserv
If you wish to give us your feedback on this publication or need further assistance, please visit the Customer Service Centre FAQ or contact us:
Email: csc@iec.ch
Tel.: +41 22 919 02 11
Fax: +41 22 919 03 00

A propos de la CEI

La Commission Electrotechnique Internationale (CEI) est la première organisation mondiale qui élabore et publie des normes internationales pour tout ce qui a trait à l'électricité, à l'électronique et aux technologies apparentées.

A propos des publications CEI

Le contenu technique des publications de la CEI est constamment revu. Veuillez vous assurer que vous possédez l'édition la plus récente, un corrigendum ou amendement peut avoir été publié.

- Catalogue des publications de la CEI: www.iec.ch/searchpub/cur_fut-f.htm
Le Catalogue en-ligne de la CEI vous permet d'effectuer des recherches en utilisant différents critères (numéro de référence, texte, comité d'études,…). Il donne aussi des informations sur les projets et les publications retirées ou remplacées.
- Just Published CEI: www.iec.ch/online_news/justpub
Restez informé sur les nouvelles publications de la CEI. Just Published détaille deux fois par mois les nouvelles publications parues. Disponible en-ligne et aussi par email.
- Electropedia: www.electropedia.org
Le premier dictionnaire en ligne au monde de termes électroniques et électriques. Il contient plus de 20 000 termes et définitions en anglais et en français, ainsi que les termes équivalents dans les langues additionnelles. Egalement appelé Vocabulaire Electrotechnique International en ligne.
- Service Clients: www.iec.ch/webstore/custserv/custserv_entry-f.htm
Si vous désirez nous donner des commentaires sur cette publication ou si vous avez des questions, visitez le FAQ du Service clients ou contactez-nous:
Email: csc@iec.ch
Tél.: +41 22 919 02 11
Fax: +41 22 919 03 00

Withdrawn

Documents
Document Sharing Hub

Full document details: IEC 60974-4 2010

IEC 60974-4

Edition 2.0 2010-08

INTERNATIONAL STANDARD

NORME INTERNATIONALE

withdrawn

Arc welding equipment – Part 4: Periodic inspection and testing

Matériel de soudage à l'arc – Partie 4: Inspection et essais périodiques

INTERNATIONAL ELECTROTECHNICAL COMMISSION

COMMISSION ELECTROTECHNIQUE INTERNATIONALE

PRICE CODE
CODE PRIX **P**

ICS 25.160

ISBN 978-2-88912-158-8

® Registered trademark of the International Electrotechnical Commission
Marque déposée de la Commission Electrotechnique Internationale

Documents
Document Sharing Hub

Full document details: IEC 60974-4 2010

CONTENTS

FOREWORD 3
1 Scope 5
2 Normative references 5
3 Terms and definitions 5
4 General requirements 6
4.1 Qualification of test personnel 6
4.2 Test conditions 6
4.3 Measuring instruments 6
4.4 Periodic inspection and test 7
4.5 Maintenance 7
4.6 Repair 7
4.7 Test sequence 7
5 Protection against electrical shock 8
5.1 Visual inspection 8
5.2 Continuity of the protective circuit 8
5.3 Insulation resistance 8
5.4 Welding circuit leakage current 8
5.5 Primary leakage current 9
5.6 No-load voltage (U_0) 11
6 Functional test 11
6.1 Function 11
6.2 Supply-circuit on/off switching device 12
6.3 Voltage-reducing device 12
6.4 Magnetic gas valve 12
6.5 Signal and control lamps 12
7 Documentation 12
7.1 Test report 12
7.2 Labelling 13
Annex A (informative) Check-list for the visual inspection 14
Annex B (informative) Example of a test report after repair 15
Annex C (informative) Equipment not built in accordance with IEC 60974-1 16

Figure 1 – Measurement of leakage current of welding circuit 9
Figure 2 – Measuring network for primary leakage current 10
Figure 3 – Principles of primary leakage current measurement for single phase equipment 10
Figure 4 – Measurement of peak values 11

Table 1 – Test sequence on used arc welding equipment 7
Table 2 – Insulation resistance 8

Withdrawn

Documents
Document Sharing Hub
Full document details: IEC 60974-4 2010

INTERNATIONAL ELECTROTECHNICAL COMMISSION

ARC WELDING EQUIPMENT –

Part 4: Periodic inspection and testing

FOREWORD

1) The International Electrotechnical Commission (IEC) is a worldwide organization for standardization comprising all national electrotechnical committees (IEC National Committees). The object of IEC is to promote international co-operation on all questions concerning standardization in the electrical and electronic fields. To this end and in addition to other activities, IEC publishes International Standards, Technical Specifications, Technical Reports, Publicly Available Specifications (PAS) and Guides (hereafter referred to as "IEC Publication(s)"). Their preparation is entrusted to technical committees; any IEC National Committee interested in the subject dealt with may participate in this preparatory work. International, governmental and non-governmental organizations liaising with the IEC also participate in this preparation. IEC collaborates closely with the International Organization for Standardization (ISO) in accordance with conditions determined by agreement between the two organizations.
2) The formal decisions or agreements of IEC on technical matters express, as nearly as possible, an international consensus of opinion on the relevant subjects since each technical committee has representation from all interested IEC National Committees.
3) IEC Publications have the form of recommendations for international use and are accepted by IEC National Committees in that sense. While all reasonable efforts are made to ensure that the technical content of IEC Publications is accurate, IEC cannot be held responsible for the way in which they are used or for any misinterpretation by any end user.
4) In order to promote international uniformity, IEC National Committees undertake to apply IEC Publications transparently to the maximum extent possible in their national and regional publications. Any divergence between any IEC Publication and the corresponding national or regional publication shall be clearly indicated in the latter.
5) IEC itself does not provide any attestation of conformity. Independent certification bodies provide conformity assessment services and, in some areas, access to IEC marks of conformity. IEC is not responsible for any services carried out by independent certification bodies.
6) All users should ensure that they have the latest edition of this publication.
7) No liability shall attach to IEC or its directors, employees, servants or agents including individual experts and members of its technical committees and IEC National Committees for any personal injury, property damage or other damage of any nature whatsoever, whether direct or indirect, or for costs (including legal fees) and expenses arising out of the publication, use of, or reliance upon, this IEC Publication or any other IEC Publications.
8) Attention is drawn to the Normative references cited in this publication. Use of the referenced publications is indispensable for the correct application of this publication.
9) Attention is drawn to the possibility that some of the elements of this IEC Publication may be the subject of patent rights. IEC shall not be held responsible for identifying any or all such patent rights.

International Standard IEC 60974-4 has been prepared by IEC technical committee 26: Electric welding.

This second edition cancels and replaces the first edition published in 2006. It constitutes a technical revision.

The main significant technical changes with respect to the previous edition are the following:

– title is amended;
– scope is extended to equipment designed in accordance with IEC 60974-6;
– complementary instructions from the manufacturer shall be followed;
– qualification of test personnel is clarified (see 4.1);
– plasma cutting power sources are excluded from no-load voltage test (see 5.6);
– voltage reducing device functional test is simplified (see 6.3);
– supply voltage is recorded in test report (see 7.1).

Withdrawn

AVA Documents
Document Sharing Hub

Full document details: IEC 60974-4 2010

The text of this standard is based on the following documents:

FDIS	Report on voting
26/422/FDIS	26/428/RVD

Full information on the voting for the approval of this standard can be found in the report on voting indicated in the above table.

This publication has been drafted in accordance with the ISO/IEC Directives, Part 2.

The list of all the parts of the IEC 60974 series, under the general title *Arc welding equipment*, can be found on the IEC website.

The committee has decided that the contents of this publication will remain unchanged until the stability date indicated on the IEC web site under "http://webstore.iec.ch" in the data related to the specific publication. At this date, the publication will be

- reconfirmed,
- withdrawn,
- replaced by a revised edition, or
- amended.

withdrawn

Documents
Document Sharing Hub

Full document details: IEC 60974-4 2010

ARC WELDING EQUIPMENT –

Part 4: Periodic inspection and testing

1 Scope

This part of IEC 60974 specifies test procedures for periodic inspection and, after repair, to ensure electrical safety. These test procedures are also applicable for maintenance.

This standard is applicable to power sources for arc welding and allied processes designed in accordance with IEC 60974-1 or IEC 60974-6. Stand-alone ancillary equipment designed in accordance with other part of IEC 60974 may be tested in accordance with relevant requirement of this part of IEC 60974.

NOTE 1 The welding power source may be tested with any ancillary equipment fitted that could affect the test results.

This standard is not applicable to testing of new power sources or engine-driven power sources.

NOTE 2 For a power source not built in accordance with IEC 60974-1, see Annex C.

2 Normative references

The following referenced documents are indispensable for the application of this document. For dated references, only the edition cited applies. For undated references, the latest edition of the referenced document (including any amendments) applies.

IEC 60050-151, *International Electrotechnical Vocabulary (IEV) – Part 151: Electrical and magnetic devices*

IEC 60050-195, *International Electrotechnical Vocabulary (IEV) – Part 195: Earthing and protection against electric shock*

IEC 60050-851, *International Electrotechnical Vocabulary (IEV) – Part 851: Electric welding*

IEC 60974-1:2005, *Arc welding equipment – Part 1: Welding power sources*

IEC 60974-6, *Arc welding equipment – Part 6: Limited duty manual metal arc welding power sources*

IEC 61557-4, *Electrical safety in low voltage distribution systems up to 1 000 V a.c. and 1 500 V d.c. – Equipment for testing, measuring or monitoring of protective measures – Part 4: Resistance of earth connection and equipotential bonding*

3 Terms and definitions

For the purposes of this document, the terms and definitions given in the IEC 60050-151, the IEC 60050-195, the IEC 60050-851, the IEC 60974-1, as well as the following, apply.

Withdrawn

Documents
Document Sharing Hub

Full document details: IEC 60974-4 2010

3.1
expert
competent person
skilled person
a person who can judge the work assigned and recognize possible hazards on the basis of professional training, knowledge, experience and knowledge of the relevant equipment

NOTE Several years of practice in the relevant technical field may be taken into consideration in assessment of professional training.

[IEC 60974-1:2005, 3.3]

3.2
instructed person
person informed about the tasks assigned and about the possible hazards involved in neglectful behaviour

NOTE If necessary, the person has undergone some training

[IEC 60974-1:2005, 3.4]

3.3
periodic inspection and test
examination carried out at specified intervals to reduce the risk of hazard

3.4
maintenance
service carried out at specified intervals to reduce the risk of hazard and failure

3.5
repair
restore to a safe and intended operating condition

3.6
test personnel
instructed person or expert that has been trained and authorized to perform periodic inspection and testing

4 General requirements

4.1 Qualification of test personnel

Tests of welding equipment can be hazardous and shall be carried out by an instructed person or expert in the field of electrical repair, preferably also familiar with welding, cutting and allied processes. Instructed persons should be considered qualified for simple periodic testing and maintenance provided the equipment enclosure does not have to be opened.

NOTE Hazardous voltages and currents inside the equipment enclosure may cause shock, burn or death. Only expert test personnel may open the equipment.

4.2 Test conditions

Tests shall be carried out at an ambient air temperature between 10 °C and 40 °C on dry and cleaned welding equipment.

4.3 Measuring instruments

The accuracy of measuring instruments shall be class 2.5 as a minimum, except for the measurement of insulation resistance, where the accuracy of the instruments is not specified but shall be taken into account for the measurement.

Withdrawn
AVA Documents
Document Sharing Hub
Full document details: IEC 60974-4 2010

4.4 Periodic inspection and test

The periodic inspection and test specified in Table 1 shall be carried out.

Tests shall be documented in a test report in accordance with 7.1.

During the tests, complementary instructions from the manufacturer shall be followed.

4.5 Maintenance

The manufacturer's maintenance schedule and instructions shall be followed.

Tests shall be documented in a test report in accordance with 7.1.

4.6 Repair

After repair or replacement of a component which restores a welding or cutting function, an expert shall select appropriate tests to be carried out, as specified in Table 1.

NOTE After a minor repair such as replacement of a lamp, wheel or under carriage, the tests given in Table 1 may not be necessary.

Tests shall be documented in a test report in accordance with 7.1.

During the tests, complementary instructions from the manufacturer shall be observed (for example, circuit diagrams, spare part list, functional test of power source and ancillary equipment, etc.).

4.7 Test sequence

The test sequence is given in Table 1.

Table 1 – Test sequence on used arc welding equipment

Periodic inspection and test	After repair
a) Visual inspection in accordance with 5.1	a) Visual inspection in accordance with 5.1
b) Electrical test: – protective conductor resistance in accordance with 5.2 – insulation resistance[a] in accordance with 5.3 – no-load voltage in accordance with 5.6	b) Electrical test: – protective conductor resistance in accordance with 5.2 – insulation resistance[a] in accordance with 5.3 – no-load voltage in accordance with 5.6
c) Functional test: – no requirement	c) Functional test: – function in accordance with 6.1 – supply-circuit on/off switching device in accordance with 6.2 – voltage-reducing device in accordance with 6.3 – magnetic gas valve in accordance with 6.4 – signal and control lamps in accordance with 6.5
d) Documentation in accordance with Clause 7	d) Documentation in accordance with Clause 7

[a] If the insulation resistance test cannot be carried out without disconnection of any component of the equipment to be tested (e.g. interference suppression networks, protection capacitors or surge protection component), the insulation resistance test may be replaced by both the primary and welding circuit leakage current tests in accordance with 5.4 and 5.5.

Withdrawn

AVA Documents Document Sharing Hub

Full document details: IEC 60974-4 2010

5 Protection against electrical shock

5.1 Visual inspection

Visual inspection shall be carried out in accordance with the conditions of use of welding equipment and the manufacturer's instructions.

An example of items for a visual inspection is given in Annex A.

5.2 Continuity of the protective circuit

For mains-powered welding equipment of protection class I, including ancillary equipment (for example, cooling system) having mains connecting cables up to a length of 5,0 m, the maximum measured protective conductor resistance shall not exceed 0,3 Ω.

For cables longer than 5,0 m, the permissible value of the protective conductor resistance is increased by 0,1 Ω per additional 7,5 m cable. The maximum permissible value of the protective conductor resistance is 1 Ω.

Conformity shall be checked by measuring the resistance between the protective conductor contact at the plug and exposed conductive parts with testing equipment according to IEC 61557-4.

During the measurement, the cables shall be bent, flexed or twisted along the whole length, especially in the vicinity of cable entries into the enclosure, in order to detect interruptions in the protective conductor.

5.3 Insulation resistance

The insulation resistance shall be not less than the values given in Table 2.

Table 2 – Insulation resistance

Measurement [a]			Resistance	Insulation
Supply circuit	to	welding circuit	5,0 MΩ	Double or reinforced
Welding circuit	to	protective circuit	2,5 MΩ	Basic
Supply circuit	to	protective circuit	2,5 MΩ	Basic
Supply circuit of Class II equipment	to	accessible surfaces [b]	5,0 MΩ	Double or reinforced

a Control circuits are tested together with the circuit to which they are galvanically connected.

b For measurement to accessible non-conductive surfaces, such surfaces shall be considered to be covered by metal foil.

Conformity shall be checked by the stabilized measurement of the insulation resistance by application of a d.c. voltage of 500 V at room temperature.

During the measurement, torches shall be disconnected, solid-state electronic components and their protective devices may be short-circuited and liquid cooling units shall be tested without liquid.

5.4 Welding circuit leakage current

The leakage current between the welding outlets and the protective conductor terminal shall not exceed 10 mA a.c. r.m.s.

Withdrawn

AVA Documents Document Sharing Hub

Full document details: IEC 60974-4 2010

Conformity shall be checked by measurement of the leakage current with a circuit as shown in Figure 1 at the rated supply voltage and no-load condition.

The measuring circuit shall have a total resistance of 1 750 Ω ± 250 Ω and be shunted by a capacitor so that the time constant of the circuit will be 225 µs ± 15 µs.

In the case of 1 750 Ω, the capacitor will be 130 nF.

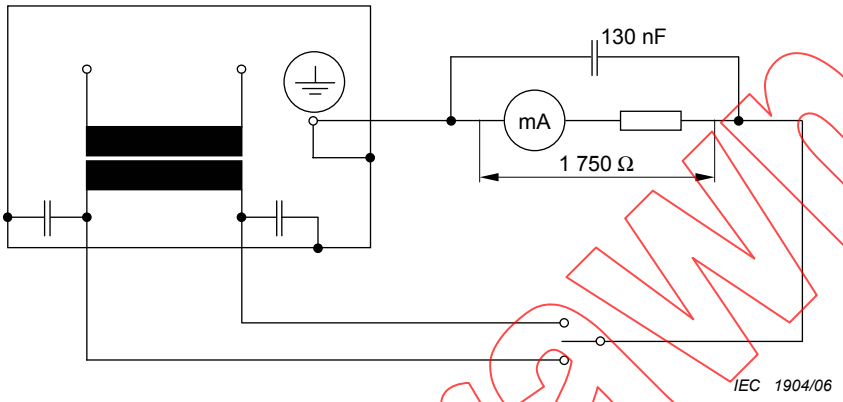

NOTE For class II equipment, use the PE-terminal of earthed supply circuit network.

Figure 1 – Measurement of leakage current of welding circuit

5.5 Primary leakage current

The primary leakage current in the external protective conductor shall not exceed

a) 5 mA r.m.s. for plug-connected equipment rated up to and including 32 A;

b) 10 mA r.m.s. for plug-connected equipment rated more than 32 A;

c) 10 mA r.m.s. for equipment for permanent connection, without special measures for the protective conductor;

d) 5 % of the rated input current per phase, for equipment for permanent connection with a reinforced protective conductor.

Conformity shall be checked using the measuring circuit shown in Figure 2 with a conventional voltmeter under the following conditions:

- *the welding equipment is*
  - *isolated from the ground plane;*
  - *supplied by the rated supply voltage;*
  - *not connected to the protective earth except through measurement components;*
- *the output circuit is in the no-load condition;*
- *interference suppression capacitors shall not be disconnected.*

NOTE 1 The circuit given in Figure 2 is used to obtain reproducible results.

Withdrawn

Documents
Document Sharing Hub
Full document details: IEC 60974-4 2010