IEC 61000-4-6

Edition 3.0 2008-10
REDLINE VERSION

INTERNATIONAL STANDARD

colour inside

BASIC EMC PUBLICATION

Electromagnetic compatibility (EMC) – Part 4-6: Testing and measurement techniques – Immunity to conducted disturbances, induced by radio-frequency fields

withdrawn

IEC 61000-4-6:2008-10 RLV (en)

AVA Documents
Document Sharing Hub

Full document details: IEC 61000-4-6 2008 RLV

THIS PUBLICATION IS COPYRIGHT PROTECTED

Copyright © 2008 IEC, Geneva, Switzerland

All rights reserved. Unless otherwise specified, no part of this publication may be reproduced or utilized in any form or by any means, electronic or mechanical, including photocopying and microfilm, without permission in writing from either IEC or IEC's member National Committee in the country of the requester.
If you have any questions about IEC copyright or have an enquiry about obtaining additional rights to this publication, please contact the address below or your local IEC member National Committee for further information.

Droits de reproduction réservés. Sauf indication contraire, aucune partie de cette publication ne peut être reproduite ni utilisée sous quelque forme que ce soit et par aucun procédé, électronique ou mécanique, y compris la photocopie et les microfilms, sans l'accord écrit de la CEI ou du Comité national de la CEI du pays du demandeur.
Si vous avez des questions sur le copyright de la CEI ou si vous désirez obtenir des droits supplémentaires sur cette publication, utilisez les coordonnées ci-après ou contactez le Comité national de la CEI de votre pays de résidence.

IEC Central Office
3, rue de Varembé
CH-1211 Geneva 20
Switzerland
Email: inmail@iec.ch
Web: www.iec.ch

About the IEC

The International Electrotechnical Commission (IEC) is the leading global organization that prepares and publishes International Standards for all electrical, electronic and related technologies.

About IEC publications

The technical content of IEC publications is kept under constant review by the IEC. Please make sure that you have the latest edition, a corrigenda or an amendment might have been published.

- Catalogue of IEC publications: www.iec.ch/searchpub
The IEC on-line Catalogue enables you to search by a variety of criteria (reference number, text, technical committee,…). It also gives information on projects, withdrawn and replaced publications.
- IEC Just Published: www.iec.ch/online_news/justpub
Stay up to date on all new IEC publications. Just Published details twice a month all new publications released. Available on-line and also by email.
- Electropedia: www.electropedia.org
The world's leading online dictionary of electronic and electrical terms containing more than 20 000 terms and definitions in English and French, with equivalent terms in additional languages. Also known as the International Electrotechnical Vocabulary online.
- Customer Service Centre: www.iec.ch/webstore/custserv
If you wish to give us your feedback on this publication or need further assistance, please visit the Customer Service Centre FAQ or contact us:
Email: csc@iec.ch
Tel.: +41 22 919 02 11
Fax: +41 22 919 03 00

A propos de la CEI

La Commission Electrotechnique Internationale (CEI) est la première organisation mondiale qui élabore et publie des normes internationales pour tout ce qui a trait à l'électricité, à l'électronique et aux technologies apparentées.

A propos des publications CEI

Le contenu technique des publications de la CEI est constamment revu. Veuillez vous assurer que vous possédez l'édition la plus récente, un corrigendum ou amendement peut avoir été publié.

- Catalogue des publications de la CEI: www.iec.ch/searchpub/cur_fut-f.htm
Le Catalogue en-ligne de la CEI vous permet d'effectuer des recherches en utilisant différents critères (numéro de référence, texte, comité d'études,…). Il donne aussi des informations sur les projets et les publications retirées ou remplacées.
- Just Published CEI: www.iec.ch/online_news/justpub
Restez informé sur les nouvelles publications de la CEI. Just Published détaille deux fois par mois les nouvelles publications parues. Disponible en-ligne et aussi par email.
- Electropedia: www.electropedia.org
Le premier dictionnaire en ligne au monde de termes électroniques et électriques. Il contient plus de 20 000 termes et définitions en anglais et en français, ainsi que les termes équivalents dans les langues additionnelles. Egalement appelé Vocabulaire Electrotechnique International en ligne.
- Service Clients: www.iec.ch/webstore/custserv/custserv_entry-f.htm
Si vous désirez nous donner des commentaires sur cette publication ou si vous avez des questions, visitez le FAQ du Service clients ou contactez-nous:
Email: csc@iec.ch
Tél.: +41 22 919 02 11
Fax: +41 22 919 03 00

Withdrawn

Documents
Document Sharing Hub

Full document details: IEC 61000-4-6 2008 RLV

IEC 61000-4-6

Edition 3.0 2008-10
REDLINE VERSION

INTERNATIONAL STANDARD

colour inside

BASIC EMC PUBLICATION

Electromagnetic compatibility (EMC) – Part 4-6: Testing and measurement techniques – Immunity to conducted disturbances, induced by radio-frequency fields

withdrawn

INTERNATIONAL
ELECTROTECHNICAL
COMMISSION

ICS 33.100.20

ISBN 978-2-8891-0376-8

Warning! Make sure that you obtained this publication from an authorized distributor.

® Registered trademark of the International Electrotechnical Commission

Documents
Document Sharing Hub

Full document details: IEC 61000-4-6 2008 RLV

withdrawn

Documents
Document Sharing Hub

Full document details: IEC 61000-4-6 2008 RLV

IEC 61000-4-6

Edition 3.0 2008-10

INTERNATIONAL STANDARD

NORME INTERNATIONALE

BASIC EMC PUBLICATION

PUBLICATION FONDAMENTALE EN CEM

Electromagnetic compatibility (EMC) – Part 4-6: Testing and measurement techniques – Immunity to conducted disturbances, induced by radio-frequency fields

Compatibilité électromagnétique (CEM) – Partie 4-6: Techniques d'essai et de mesure – Immunité aux perturbations conduites, induites par les champs radioélectriques

Withdrawn

IEC 61000-4-6:2008

AVA Documents
Document Sharing Hub

Full document details: IEC 61000-4-6 2008 RLV

CONTENTS

FOREWORD 5
INTRODUCTION 7
1 Scope and object 8
2 Normative references 8
3 Terms and definitions 8
4 General 10
5 Test levels 10
6 Test equipment 11
6.1 Test generator 11
6.2 Coupling and decoupling devices 12
6.2.1 Coupling/decoupling networks (CDNs) 12
6.2.2 Clamp injection devices 13
6.2.3 Direct injection devices 14
6.2.4 Decoupling networks 14
6.3 Verification of the common mode impedance at the EUT port of coupling and decoupling devices 14
6.3.1 Insertion loss of the 150 Ω to 50 Ω adapters 15
6.4 Setting of the test generator 15
6.4.1 Setting of the output level at the EUT port of the coupling device 15
7 Test set-up for table-top and floor-standing equipment 16
7.1 Rules for selecting injection methods and test points 16
7.1.1 Injection method 16
7.1.2 Ports to be tested 17
7.2 Procedure for CDN injection application 18
7.3 Procedure for clamp injection when the common-mode impedance requirements can be met 18
7.4 Procedure for clamp injection when the common-mode impedance requirements cannot be met 19
7.5 Procedure for direct injection 19
7.6 EUT comprising a single unit 19
7.7 EUT comprising several units 20
8 Test procedure 20
9 Evaluation of the test results 21
10 Test report 21
Annex A (normative) Additional information regarding clamp injection 33
Annex B (informative) Selection criteria for the frequency range of application 38
Annex C (informative) Guide for selecting test levels 40
Annex D (informative) Information on coupling and decoupling networks 41
Annex E (informative) Information for the test generator specification 45
Annex F (informative) Test set-up for large EUTs 46
Annex G (informative) Measurement uncertainty of test instrumentation 49
Bibliography 56

Figure 1 – Rules for selecting the injection method 17

Withdrawn

AVA Documents
Document Sharing Hub

Figure 2 – Immunity test to RF conducted disturbances 23
Figure 3 – Test generator set-up 24
Figure 4 – Open circuit waveforms at the EUT port of a coupling device for test level 1 24
Figure 5 – Principle of coupling and decoupling 27
Figure 6 – Principle of coupling and decoupling according to the clamp injection method 27
Figure 7 – Details of set-ups and components to verify the essential characteristics of coupling and decoupling devices and the 150 Ω to 50 Ω adapters 29
Figure 8 – Set-up for level setting (see 6.4.1) 30
Figure 9 – Example of test set-up with a single unit EUT 31
Figure 10 – Example of a test set-up with a multi-unit EUT 32
Figure A.1 – Circuit for level setting set-up in a 50 Ω test Jig 34
Figure A.2 – The 50 Ω test jig construction 34
Figure A.3 – Construction details of the EM clamp 35
Figure A.4 – Concept of the EM clamp (electromagnetic clamp) 36
Figure A.5 – Coupling factor of the EM clamp 36
Figure A.6 – General principle of a test set-up using injection clamps 37
Figure A.7 – Example of the test unit locations on the ground plane when using injection clamps (top view) 37
Figure B.1 – Start frequency as function of cable length and equipment size 39
Figure D.1 – Example of a simplified diagram for the circuit of CDN-S1 used with screened cables (see 6.2.1) 42
Figure D.2 – Example of simplified diagram for the circuit of CDN-M1/-M2/-M3 used with unscreened supply (mains) lines (see 6.2.1.1) 42
Figure D.3 – Example of a simplified diagram for the circuit of CDN-AF2 used with unscreened non-balanced lines (see 6.2.1.3) 43
Figure D.4 – Example of a simplified diagram for the circuit of a CDN-T2, used with an unscreened balanced pair (see 6.2.1.2) 43
Figure D.5 – Example of a simplified diagram of the circuit of a CDN-T4 used with unscreened balanced pairs (see 6.2.1.2) 44
Figure D.6 – Example of a simplified diagram of the circuit of a CDN-T8 used with unscreened balanced pairs (see 6.2.1.2) 44
Figure F.1 – Example of large EUT test set-up with elevated horizontal ground reference plane 47
Figure F.2 – Example of large EUT test set-up with vertical ground reference plane 48
Figure G.1 – Example of influences upon the test method using CDN 49
Figure G.2 – Example of influences upon the test method using EM clamp 50
Figure G.3 – Example of influences upon the test method using current clamp 50
Figure G.4 – Example of influences upon the test method using direct injection 50

Table 1 – Test levels 11
Table 2 – Characteristics of the test generator 12
Table 3 – Main parameter of the combination of the coupling and decoupling device 12
Table B.1 – Main parameter of the combination of the coupling and decoupling device when the frequency range of test is extended above 80 MHz 38
Table E.1 – Required power amplifier output power to obtain a test level of 10 V 45
Table G.1a – CDN calibration process 51

Withdrawn

AVA Documents
Document Sharing Hub

Full document details: IEC 61000-4-6 2008 RLV

Table G.1b – CDN test process 51
Table G.2a – EM clamp calibration process 53
Table G.2b – EM clamp test process 53
Table G.3a – Current clamp calibration process 54
Table G.3b – Current clamp test process 54
Table G.4a – Direct injection calibration process 55
Table G.4b – Direct injection test process 55

withdrawn

Documents
Document Sharing Hub

Full document details: IEC 61000-4-6 2008 RLV

INTERNATIONAL ELECTROTECHNICAL COMMISSION

ELECTROMAGNETIC COMPATIBILITY (EMC) –

Part 4-6: Testing and measurement techniques – Immunity to conducted disturbances, induced by radio-frequency fields

FOREWORD

1) The International Electrotechnical Commission (IEC) is a worldwide organization for standardization comprising all national electrotechnical committees (IEC National Committees). The object of IEC is to promote international co-operation on all questions concerning standardization in the electrical and electronic fields. To this end and in addition to other activities, IEC publishes International Standards, Technical Specifications, Technical Reports, Publicly Available Specifications (PAS) and Guides (hereafter referred to as "IEC Publication(s)"). Their preparation is entrusted to technical committees; any IEC National Committee interested in the subject dealt with may participate in this preparatory work. International, governmental and non-governmental organizations liaising with the IEC also participate in this preparation. IEC collaborates closely with the International Organization for Standardization (ISO) in accordance with conditions determined by agreement between the two organizations.

2) The formal decisions or agreements of IEC on technical matters express, as nearly as possible, an international consensus of opinion on the relevant subjects since each technical committee has representation from all interested IEC National Committees.

3) IEC Publications have the form of recommendations for international use and are accepted by IEC National Committees in that sense. While all reasonable efforts are made to ensure that the technical content of IEC Publications is accurate, IEC cannot be held responsible for the way in which they are used or for any misinterpretation by any end user.

4) In order to promote international uniformity, IEC National Committees undertake to apply IEC Publications transparently to the maximum extent possible in their national and regional publications. Any divergence between any IEC Publication and the corresponding national or regional publication shall be clearly indicated in the latter.

5) IEC provides no marking procedure to indicate its approval and cannot be rendered responsible for any equipment declared to be in conformity with an IEC Publication.

6) All users should ensure that they have the latest edition of this publication.

7) No liability shall attach to IEC or its directors, employees, servants or agents including individual experts and members of its technical committees and IEC National Committees for any personal injury, property damage or other damage of any nature whatsoever, whether direct or indirect, or for costs (including legal fees) and expenses arising out of the publication, use of, or reliance upon, this IEC Publication or any other IEC Publications.

8) Attention is drawn to the Normative references cited in this publication. Use of the referenced publications is indispensable for the correct application of this publication.

9) Attention is drawn to the possibility that some of the elements of this IEC Publication may be the subject of patent rights. IEC shall not be held responsible for identifying any or all such patent rights.

International Standard IEC 61000-4-6 has been prepared by subcommittee 77B: High-frequency phenomena, of IEC technical committee 77: Electromagnetic compatibility.

This standard forms part 4-6 of IEC 61000. It has the status of a basic EMC publication in accordance with IEC Guide 107, *Electromagnetic compatibility – Guide to the drafting of electromagnetic compatibility publications*.

This third edition of IEC 61000-4-6 cancels and replaces the second edition published in 2003, Amendment 1 (2004) and Amendment 2 (2006).This edition constitutes a technical revision.

The document 77B/571/FDIS, circulated to the National Committees as Amendment 3, led to the publication of the new edition.

Withdrawn

Documents
Document Sharing Hub

Full document details: IEC 61000-4-6 2008 RLV

The text of this standard is based on the second edition, its Amendment 1, Amendment 2 and on the following documents:

FDIS	Report on voting
77B/571/FDIS	77B/577/RVD

Full information on the voting for the approval of this standard can be found in the report on voting indicated in the above table.

This publication has been drafted in accordance with the ISO/IEC Directives, Part 2.

The committee has decided that the contents of the base publication and its amendments will remain unchanged until the maintenance result date indicated on the IEC web site under "http://webstore.iec.ch" in the data related to the specific publication. At this date, the publication will be

- reconfirmed,
- withdrawn,
- replaced by a revised edition, or
- amended.

withdrawn

Documents
Document Sharing Hub

Full document details: IEC 61000-4-6 2008 RLV

INTRODUCTION

IEC 61000 is published in separate parts according to the following structure:

Part 1: General

General considerations (introduction, fundamental principles)

Definitions, terminology

Part 2: Environment

Description of the environment

Classification of the environment

Compatibility levels

Part 3: Limits

Emission limits

Immunity limits (in so far as they do not fall under the responsibility of the product committees)

Part 4: Testing and measurement techniques

Measurement techniques

Testing techniques

Part 5: Installation and mitigation guidelines

Installation guidelines

Mitigation methods and devices

Part 6: Generic standards

Part 9: Miscellaneous

Each part is further subdivided into several parts, published either as international standards or as technical specifications or technical reports, some of which have already been published as sections. Others will be published with the part number followed by a dash and a second number identifying the subdivision (example : 61000-6-1).

This part is an international standard which gives immunity requirements and test procedure related to conducted disturbances induced by radio-frequency fields.

Withdrawn

AVA Documents
Document Sharing Hub

Full document details: IEC 61000-4-6 2008 RLV

ELECTROMAGNETIC COMPATIBILITY (EMC) –

Part 4-6: Testing and measurement techniques – Immunity to conducted disturbances, induced by radio-frequency fields

Withdrawn

1 Scope and object

This part of IEC 61000 relates to the conducted immunity requirements of electrical and electronic equipment to electromagnetic disturbances coming from intended radio-frequency (RF) transmitters in the frequency range 9 kHz up to 80 MHz. Equipment not having at least one conducting cable (such as mains supply, signal line or earth connection) which can couple the equipment to the disturbing RF fields is excluded.

NOTE 1 Test methods are defined in this part for measuring the effect that conducted disturbing signals, induced by electromagnetic radiation, have on the equipment concerned. The simulation and measurement of these conducted disturbances are not adequately exact for the quantitative determination of effects. The test methods defined are structured for the primary objective of establishing adequate repeatability of results at various facilities for quantitative analysis of effects.

The object of this standard is to establish a common reference for evaluating the functional immunity of electrical and electronic equipment when subjected to conducted disturbances induced by radio-frequency fields. The test method documented in this part of IEC 61000 describes a consistent method to assess the immunity of an equipment or system against a defined phenomenon.

NOTE 2 As described in IEC Guide 107, this standard is a basic EMC publication for use by product committees of the IEC. As also stated in Guide 107, the IEC product committees are responsible for determining whether this immunity test standard should be applied or not, and if applied, they are responsible for determining the appropriate test levels and performance criteria. TC 77 and its sub-committees are prepared to co-operate with product committees in the evaluation of the value of particular immunity tests for their products.

2 Normative references

The following referenced documents are indispensable for the application of this document. For dated references, only the edition cited applies. For undated references, the latest edition of the referenced document (including any amendments) applies.

IEC 60050-161, *International Electrotechnical Vocabulary (IEV) – Chapter 161: Electromagnetic compatibility*

3 Terms and definitions

For the purposes of this part of IEC 61000, the terms and definitions given in IEC 60050-161 as well as the following definitions apply.

3.1
artificial hand
electrical network simulating the impedance of the human body under average operational conditions between a hand-held electrical appliance and earth

[IEV 161-04-27]

NOTE The construction should be in accordance with CISPR 16-1-2.

AVA Documents
Document Sharing Hub

Full document details: IEC 61000-4-6 2008 RLV

3.2
auxiliary equipment
AE
equipment necessary to provide the equipment under test (EUT) with the signals required for normal operation and equipment to verify the performance of the EUT

3.3
clamp injection
clamp injection is obtained by means of a clamp-on "current" injecting device on the cable:

– **current clamp**: a transformer, the secondary winding of which consists of the cable into which the injection is made;

– **electromagnetic clamp** (EM clamp): injection device with combined capacitive and inductive coupling

3.4
common-mode impedance
ratio of the common mode voltage and the common-mode current at a certain port

NOTE This common mode impedance can be determined by applying a unity common mode voltage between the terminal(s) or screen of that port and a reference plane (point). The resulting common mode current is then measured as the vectorial sum of all currents flowing through these terminal(s) or screen (see also Figures 8a and 8b).

3.5
coupling factor
ratio given by the open-circuit voltage (e.m.f.) obtained at the EUT port of the coupling (and decoupling) device divided by the open-circuit voltage obtained at the output of the test generator

3.6
coupling network
electrical circuit for transferring energy from one circuit to another with a defined impedance

NOTE Coupling and decoupling devices can be integrated into one box (coupling and decoupling network (CDN)) or they can be in separate networks.

3.7
coupling/decoupling network
CDN
electrical circuit incorporating the functions of both the coupling and decoupling networks

3.8
decoupling network
electrical circuit for preventing test signals applied to the EUT from affecting other devices, equipment or systems that are not under test

3.9
test generator
generator (RF generator, modulation source, attenuators, broadband power amplifier and filters) capable of generating the required test signal (see Figure 3)

3.10
electromotive force
e.m.f.
voltage at the terminals of the ideal voltage source in the representation of an active element

[IEV 131-01-38:1978]

Withdrawn

AVA Documents
Document Sharing Hub

Full document details: IEC 61000-4-6 2008 RLV

3.11
measurement result
U_{mr}
voltage reading of the measurement equipment

3.12
voltage standing wave ratio
VSWR
ratio of a maximum to an adjacent minimum voltage magnitude along the line

4 General

The source of disturbance covered by this part of IEC 61000 is basically an electromagnetic field, coming from intended RF transmitters, that may act on the whole length of cables connected to installed equipment. The dimensions of the disturbed equipment, mostly a sub-part of a larger system, are assumed to be small compared with the wavelengths involved. The in-going and outgoing leads (e.g. mains, communication lines, interface cables) behave as passive receiving antenna networks because of their length, which can be several wavelengths.

Between those cable networks, the susceptible equipment is exposed to currents flowing “through" the equipment. Cable systems connected to an equipment are assumed to be in resonant mode (λ/4, λ/2 open or folded dipoles) and as such are represented by coupling and decoupling devices having a common-mode impedance of 150 Ω with respect to a ground reference plane. Where possible the EUT is tested by connecting it between two 150 Ω common-mode impedance connections: one providing an RF source and the other providing a return path for the current.

This test method subjects the EUT to a source of disturbance comprising electric and magnetic fields, simulating those coming from intentional RF transmitters. These disturbing fields (E and H) are approximated by the electric and magnetic near-fields resulting from the voltages and currents caused by the test set-up as shown in Figure 2a.

The use of coupling and decoupling devices to apply the disturbing signal to one cable at the time, while keeping all other cables non-excited, see Figure 2b, can only approximate the real situation where disturbing sources act on all cables simultaneously, with a range of different amplitudes and phases.

Coupling and decoupling devices are defined by their characteristics given in 6.2. Any coupling and decoupling device fulfilling these characteristics can be used. The coupling and decoupling networks in Annex D are only examples of commercially available networks.

5 Test levels

No tests are required for induced disturbances caused by electromagnetic fields coming from intentional RF transmitters in the frequency range 9 kHz to 150 kHz.

Withdrawn

AVA Documents
Document Sharing Hub
Full document details: IEC 61000-4-6 2008 RLV

Table 1 – Test levels

Frequency range 150 kHz – 80 MHz		
Level	Voltage level (e.m.f.)	
	U_0 dB(μV)	U_0 V
1	120	1
2	130	3
3	140	10
X [a]	Special	
[a] X is an open level.		

The open-circuit test levels (e.m.f.) of the unmodulated disturbing signal, expressed in r.m.s., are given in Table 1. The test levels are set at the EUT port of the coupling devices, see 6.4.1. For testing of equipment, this signal is 80 % amplitude modulated with a 1 kHz sine wave to simulate actual threats. The effective amplitude modulation is shown in Figure 4. Guidance for selecting test levels is given in Annex C.

NOTE 1 IEC 61000-4-3 also defines test methods for establishing the immunity of electrical and electronic equipment against radiated electromagnetic energy. It covers frequencies above 80 MHz. Product committees may decide to choose a lower or higher transition frequency than 80 MHz (see Annex B).

NOTE 2 Product committees may select alternative modulation schemes.

6 Test equipment

6.1 Test generator

The test generator includes all equipment and components for supplying the input port of each coupling device with the disturbing signal at the required signal level at the required point. A typical arrangement comprises the following items which may be separate or integrated into one or more test instruments (see 3.9 and Figure 3):

– RF generator(s), G1, capable of covering the frequency band of interest and of being amplitude modulated by a 1 kHz sine wave with a modulation depth of 80 %. They shall have manual control (e.g., frequency, amplitude, modulation index) or in the case of RF synthesizers, they shall be programmable with frequency-dependent step sizes and dwell times;

– attenuator, T1, (typically 0 dB … 40 dB) of adequate frequency rating to control the disturbing test source output level. T1 may be included in the RF generator and is optional;

– RF switch, S1, by which the disturbing test signal can be switched on and off when measuring the immunity of the EUT. S1 may be included in the RF generator and is optional;

– broadband power amplifier(s), PA, may be necessary to amplify the signal if the output power of the RF generator is insufficient;

– low-pass filters (LPF), and/or high-pass filters (HPF) may be necessary to avoid interference caused by (higher order or sub-) harmonics with some types of EUT, for example RF receivers. When required they shall be inserted in between the broadband power amplifier, PA, and the attenuator T2;

– attenuator, T2, (fixed ≥ 6 dB, Z_0 = 50 Ω), with sufficient power ratings. T2 is provided to reduce the mismatch from the power amplifier to the coupling device.

NOTE T2 may be included in a coupling and decoupling network and can be left out if the output impedance of the broadband power amplifier remains within the specification under any load condition.

Characteristics of the test generator with and without modulation are given in Table 2.

Withdrawn

AVA Documents Document Sharing Hub

Full document details: IEC 61000-4-6 2008 RLV

Table 2 – Characteristics of the test generator

Output impedance	50 Ω
Harmonics and distortion	any spurious spectral line shall be at least 15 dB below the carrier level
Amplitude modulation	internal or external, 80 % ± 5 % in depth 1 kHz ± 10 % sine wave
Output level	sufficiently high to cover test level (see also Annex E)

6.2 Coupling and decoupling devices

Coupling and decoupling devices shall be used for appropriate coupling of the disturbing signal (over the entire frequency range, with a defined common-mode impedance at the EUT port) to the various cables connected to the EUT and for preventing applied test signals from affecting other devices, equipment and systems that are not under test.

The coupling and decoupling devices can be combined into one box (a coupling/ decoupling network, CDN) or can consist of several parts. The main coupling and decoupling device parameter, the common-mode impedance seen at the EUT-port, is specified in Table 3.

The preferred coupling and decoupling devices are the CDNs, for reasons of test reproducibility and protection of the AE. However, if they are not suitable or available, other injection methods can be used. Rules for selecting the appropriate injection method are given below and in 7.1.

Table 3 – Main parameter of the combination of the coupling and decoupling device

	Frequency band	
Parameter	0,15 MHz – 26 MHz	26 MHz – 80 MHz
$\lvert Z_{ce} \rvert$	150 Ω ± 20 Ω	150 Ω + 60 Ω – 45 Ω

NOTE 1 Neither the argument of Z_{ce} nor the decoupling factor between the EUT port and the AE port are specified separately. These factors are embodied in the requirement that the tolerance of $\lvert Z_{ce} \rvert$ shall be met with the AE-port open or short-circuited to the ground reference plane.

NOTE 2 When clamp injection methods are used, without complying with the common-mode impedance requirements for the auxiliary equipment, the requirements of Z_{ce} may not be met. However, the injection clamps can provide acceptable test results when the guidance of 7.4 is followed.

6.2.1 Coupling/decoupling networks (CDNs)

These networks comprise the coupling and decoupling circuits in one box and can be used for specific unscreened cables e.g. CDN-M1, CDN-M2, CDN-M3, CDN-T2, CDN-T4, CDN-AF-2, see Annex D. Typical concepts of the coupling and the decoupling networks are given in Figures 5c and 5d. The networks shall not unduly affect the functional signals. Constraints on such effects may be specified in the product standards.

6.2.1.1 CDNs for power supply lines

Coupling/decoupling networks are recommended for all power supply connections. However, for high power (current ≥16 A) and/or complex supply systems (multi-phase or various parallel supply voltages) other injection methods may be selected.

The disturbing signal shall be coupled to the supply lines, using type CDN-M1 (single wire), CDN-M2 (two wires) or CDN-M3 (three wires), or equivalent networks (see Annex D). Similar networks can be defined for a 3-phase mains system. The coupling circuit is given in Figure 5c.

Withdrawn

AVA Documents Document Sharing Hub

Full document details: IEC 61000-4-6 2008 RLV

The performance of the CDN shall not be unduly degraded by saturation of the magnetic material due to current taken by the EUT. Wherever possible, the network construction should ensure that the magnetising effect of the forward current is cancelled by that due to the return current.

If in real installations the supply wires are individually routed, separate CDN-M1 coupling and decoupling networks shall be used and all input ports shall be treated separately.

If the EUT is provided with other earth terminals (e.g. for RF purposes or high leakage currents), they shall be connected to the ground reference plane:

– through the CDN-M1 when the characteristics or specification of the EUT permit. In this case, the (power) supply shall be provided through the CDN-M3 network;
– when the characteristics or specification of the EUT do not permit the presence of a CDN-M1 network in series with the earth terminal for RF or other reasons, the earth terminal shall be directly connected to the ground reference plane. In this case the CDN-M3 network shall be replaced by a CDN-M2 network to prevent an RF short circuit by the protective earth conductor. When the equipment was already supplied via CDN-M1 or CDN-M2 networks, these shall remain in operation.

Warning: The capacitors used within the CDNs bridge live parts. As a result, high leakage currents may occur and safety connections from the CDN to the ground reference plane are obligatory (in some cases, these connections may be provided by the construction of the CDN).

6.2.1.2 CDNs for unscreened balanced lines

For coupling and decoupling disturbing signals to an unscreened cable with balanced lines, a CDN-T2, CDN-T4 or CDN-T8 shall be used as coupling and decoupling network. Figures D.4, D.5 and D.6 in Annex D show these possibilities:

– CDN-T2 for a cable with 1 symmetrical pair (2 wires);
– CDN-T4 for a cable with 2 symmetrical pairs (4 wires);
– CDN-T8 for a cable with 4 symmetrical pairs (8 wires).

NOTE Other CDN-Tx networks may be used if they are suitable for the intended frequency range and satisfy the requirements of 6.2. For example, the differential to common mode conversion loss of the CDNs should have a larger value than the specified conversion ratio of the cable to be installed or equipment connected to the installed cable. If different conversion ratios are specified for cable and equipment then the smaller value applies. Often, clamp injection needs to be applied to multi-pair balanced cables because suitable CDNs might not be available.

6.2.1.3 Coupling and decoupling for unscreened non-balanced lines

For coupling and decoupling disturbing signals to an unscreened cable with non-balanced lines, a coupling and decoupling network as described in Figure D.3 for a single pair may be used.

NOTE If no suitable CDN is available, clamp injection should be used.

6.2.2 Clamp injection devices

With clamp injection devices, the coupling and decoupling functions are separated. Coupling is provided by the clamp-on device while the common-mode impedance and the decoupling functions are established at the auxiliary equipment. As such, the auxiliary equipment becomes part of the coupling and decoupling devices (see Figure 6). Subclause 7.3 gives instructions for proper application.

When an EM clamp or a current clamp is used without fulfilling the constraints given in 7.3, the procedure defined in 7.4 shall be followed. The induced voltage is set in the same way as described in 6.4.1. In addition, the resulting current shall be monitored and corrected for. In this procedure, a lower common mode impedance may be used, but the common mode current is limited to the value which would flow from a 150 Ω source.

Withdrawn

AVA Documents Document Sharing Hub

Full document details: IEC 61000-4-6 2008 RLV

6.2.2.1 Current clamp

This device establishes an inductive coupling to the cable connected to the EUT. For example, with a 5:1 turn ratio, the transformed common-mode series impedance can be neglected with respect to the 150 Ω established by the auxiliary equipment. In this case, the test generator's output impedance (50 Ω) is transformed into 2 Ω. Other turns ratios may be used; see Annex A.

NOTE 1 When using a current clamp, care should be taken that the higher harmonics generated by the power amplifier (PA) do not appear at higher levels than the fundamental signal levels at the EUT port of the coupling device.

NOTE 2 It is commonly necessary to position the cable through the center of the clamp to minimize capacitive coupling.

6.2.2.2 EM clamp

The EM clamp establishes both capacitive and inductive coupling to the cable connected to the EUT. The construction and performance of the EM clamp are described in Annex A.

6.2.3 Direct injection devices

The disturbing signal, coming from the test generator, is injected on to screened and coaxial cables via a 100 Ω resistor (even if the shield is ungrounded or grounded at one end only). In between the auxiliary equipment (AE) and the injection point, a decoupling circuit (see 6.2.4) shall be inserted as close as possible to the injection point (see Figure 5b). To increase decoupling and to stabilize the circuit, a ground connection shall be made from the screen of the direct injection device's input port to the ground reference plane. This connection is made on the AE side of the injection device.

NOTE When making direct connection to foil shields, caution needs to be exercised to ensure a good connection producing reliable test results.

For certain simple screened cable configurations, the decoupling circuit together with the 100 Ω resistor may be combined into one box, creating a CDN.

6.2.4 Decoupling networks

Normally, the decoupling network comprises several inductors to create a high impedance over the frequency range. This is determined by the ferrite material used, and an inductance of at least 280 µH is required at 150 kHz. The reactance shall remain high, ≥260 Ω up to 26 MHz and ≥150 Ω above 26 MHz. The inductance can be achieved either by having a number of windings on ferrite toroids (see Figure 5d) or by using a number of ferrite toroids over the cable (usually as a clamp-on tube).

The CDNs as specified in Annex D can be used as decoupling networks with the RF input port left unloaded, unless stated otherwise elsewhere in this standard. When CDNs are used in this way, they shall meet the requirements of this clause.

The decoupling networks shall be used on all cables not selected for the test, but connected to the EUT and/or AEs. For exceptions, see 7.7.

6.3 Verification of the common mode impedance at the EUT port of coupling and decoupling devices

Coupling and decoupling devices are characterized by the common-mode impedance seen at the EUT port, $|Z_{ce}|$. Its correct value ensures the reproducibility of the test results. The common-mode impedance of coupling and decoupling devices is verified using the set-up shown in Figure 7.

The coupling and decoupling devices and the impedance reference plane (Figure 7a) shall be placed on a ground reference plane. The size of the ground reference plane shall exceed the projected geometry of the set-up on all sides by at least 0,2 m.

Withdrawn

AVA Documents Document Sharing Hub

Full document details: IEC 61000-4-6 2008 RLV

The impedance reference plane shall be connected to the EUT port of the CDN by a connection shorter than or equal to 30 mm as shown in Figure 7a. The magnitude of the common-mode impedance seen at the connector on the impedance plane shall be measured.

The coupling and decoupling networks shall meet the impedance requirements of Table 3 while the input port is terminated with a 50 Ω load and the AE-port is sequentially loaded in common-mode with a short-circuit and an open-circuit condition as shown in Figure 7b. This requirement ensures sufficient attenuation and makes the set-up of the auxiliary equipment, e.g. open or short circuited, inputs insignificant.

If clamp injection or direct injection is used, it is unrealistic to verify the common-mode impedance for each AE set-up connected to the EUT. Normally, it is sufficient to follow the procedure as given in 7.3. In all other cases the procedure defined in 7.4 shall be used.

6.3.1 Insertion loss of the 150 Ω to 50 Ω adapters

When the test generator is set up prior to testing, the test level must be verified in a 150 Ω common-mode impedance environment. This is achieved by connecting the appropriate common-mode point to a 50 Ω measurement device via a 150 Ω to 50 Ω adapter as shown in Figure 7c. The construction of the adapter is shown in Figures 7d and 7e.

The adapters shall be placed on a ground reference plane, the size of which exceeds the projected geometry of this set-up on all sides by at least 0,2 m. The insertion loss is measured according to the principle of Figure 7c. Its value shall be in the range of (9,5 ± 0,5) dB (theoretical value 9,5 dB caused by the additional series impedance when measured in a 50 Ω system). If necessary, the cable attenuation of the test set-up shall be compensated for. Attenuators with suitable VSWR (≤1,2) at the inputs and outputs of receivers and generators are recommended.

6.4 Setting of the test generator

For the correct setting of the unmodulated test level the procedure in 6.4.1 shall be applied. It is assumed that the test generator, the coupling and decoupling devices and the 150 Ω to 50 Ω adapter comply with the requirements of 6.1, 6.2 and 6.3.1.

Warning: During the setting of the test generator, all connections to the EUT and AE port of the coupling and decoupling devices other than those required (see Figure 8), shall be disconnected either to avoid short-circuit conditions or to avoid destruction of the measurement equipment.

The output level of the test generator shall be set (see 6.4.1) with an unmodulated carrier. After the correct settings have been made, the modulation shall be switched on and checked.

The output level of the test generator can be determined either by measurement of the amplifier output power or by the RF generator output, so long as the stability of the test equipment can be guaranteed.

The correct output level must be determined for all test frequencies applied to the EUT.

6.4.1 Setting of the output level at the EUT port of the coupling device

The test generator shall be connected to the RF input port of the coupling device. The EUT port of the coupling device shall be connected in common mode through the 150 Ω to 50 Ω adapter to a measuring equipment having a 50 Ω input impedance. The AE port of the CDN shall be loaded in common mode with a 150 Ω to 50 Ω adapter, terminated with 50 Ω. The set-up is given in Figure 8 for all coupling and decoupling devices.

NOTE 1 With direct injection, the 150 Ω load at the AE port is not required as the screen is connected to the ground reference plane at the AE port side.

Withdrawn

AVA Documents Document Sharing Hub

Full document details: IEC 61000-4-6 2008 RLV

Using the above-mentioned set-up, the test generator shall be adjusted to yield the following reading on the measuring equipment.

$U_{mr} = U_0/6 \pm 25$ %, in linear quantities, or

$U_{mr} = U_0 - 15{,}6$ dB $\pm$ 2 dB in logarithmic quantities.

The setting has to be performed for each individual coupling and decoupling device. The control parameters of the test generator setting (software parameters, attenuator setting, etc.) shall be recorded and used for testing.

NOTE 2 U_0 is the test voltage specified in Table 1 and U_{mr} is the measured voltage as defined in 3.11 and Figure 8. To minimize testing errors, the output level of the test generator is set by setting U_{mr} with 150 Ω loads and not by setting U_0.

NOTE 3 The factor 6 (15,6 dB) arises from the e.m.f. value specified for the test level. The matched load level is half the e.m.f. level and the further 3:1 voltage division is caused by the 150 Ω to 50 Ω adapter terminated by the 50 Ω measuring equipment.

When the level setting for current clamps is carried out in a 50 Ω test environment (see A.1), the voltage, U_{mr} appearing across the 50 Ω load shall be 6 dB less than the test level required. In this case, the measured voltages or resulting currents in the 50 Ω test jig are equal to:

$U_{mr} = (U_0/2) \pm 25$ %, in linear quantifies

or

$U_{mr} = U_0 - 6$ dB $\pm$ 2 dB in logarithmic quantities.

7 Test set-up for table-top and floor-standing equipment

The equipment to be tested is placed on an insulating support of 0,1 m height above a ground reference plane. All cables exiting the EUT shall be supported at a height of at least 30 mm above the ground reference plane.

If the equipment is designed to be mounted in a panel, rack or cabinet, then it shall be tested in this configuration. When a means is required to support the test sample, such support shall be constructed of a non-metallic, non-conducting material. Grounding of the equipment shall be consistent with the manufacturer's installation instructions.

Where coupling and/or decoupling devices are required, they shall be located between 0,1 m and 0,3 m from the EUT. This distance is to be measured horizontally from the projection of the EUT on to the ground reference plane to the coupling and/or decoupling device. See Figures 6, 9 and 10. Subclauses 7.1 to 7.7 provide more detailed information.

7.1 Rules for selecting injection methods and test points

For selecting the type and number of cables to be provided with coupling and decoupling devices, the physical configuration of typical installation conditions shall be considered, e.g. the likely length of the longest cables.

For all tests, the total cable length between the EUT and AE (including the internal cabling of any CDN being used) shall not exceed the maximum length specified by the manufacturer of the EUT.

7.1.1 Injection method

Figure 1 gives rules for selecting the injection method.

Withdrawn

AVA Documents Document Sharing Hub

Full document details: IEC 61000-4-6 2008 RLV

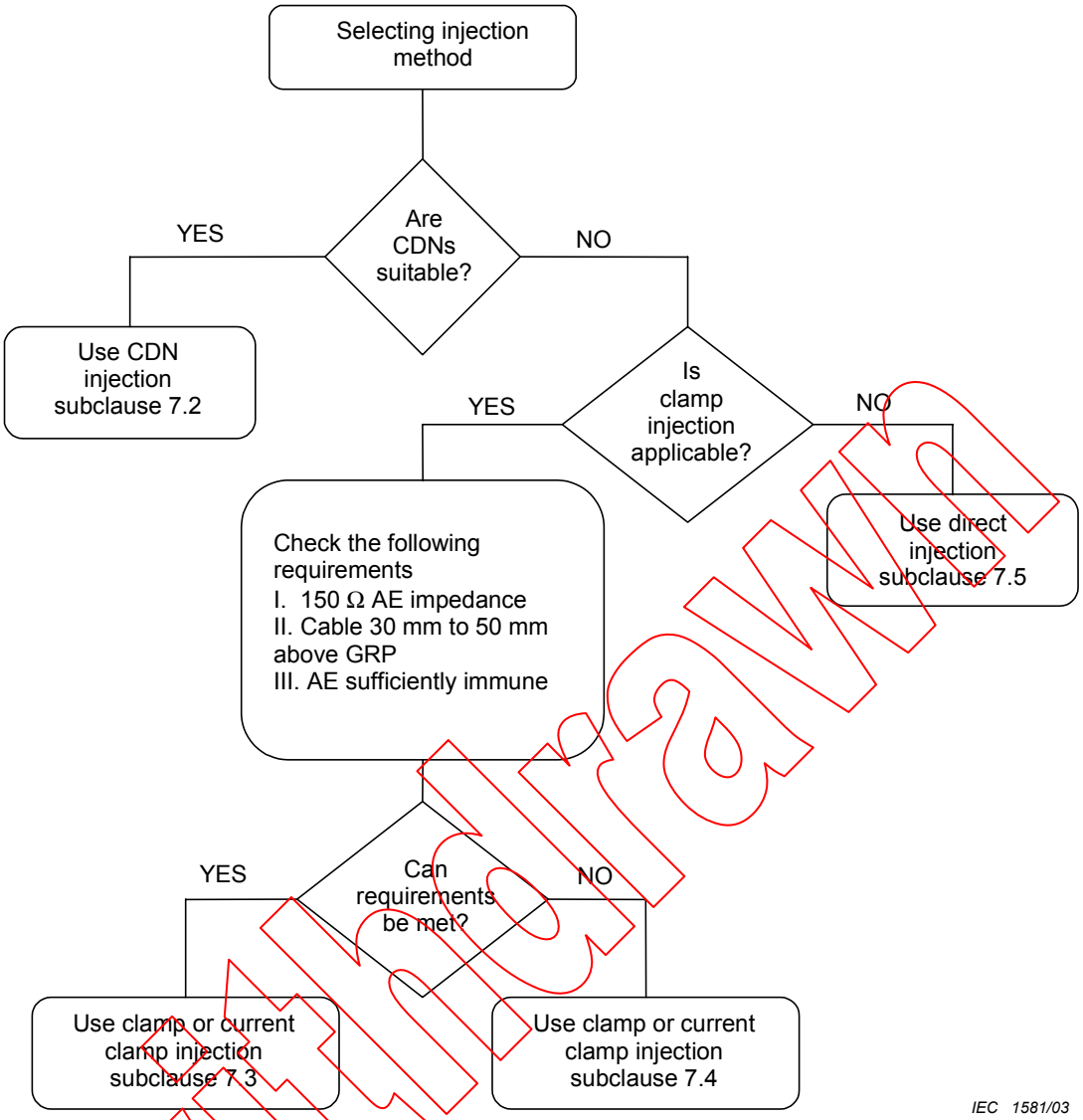

Figure 1 – Rules for selecting the injection method

Where not specified herein, the EUT including selected cables for testing shall be configured, installed, arranged and operated in a manner consistent with typical applications. CDNS not listed in this standard, but meeting the requirements of this standard, may also be used.

When several cables coming from the EUT are in close proximity over a length of more than 10 m or are routed from the EUT to another equipment in a cable tray or conduit, they should be treated as one cable.

If a product committee decides that a certain kind of coupling and decoupling device is more appropriate for cables connected to a particular family of products, then that choice (justified on a technical basis) takes precedence. These devices shall be described in the product standard. Examples of CDNs are described in Annex D.

7.1.2 Ports to be tested

In any one test, only two 150 Ω networks are required. The network used for injection of the test signal can be moved between different ports as they are tested. When a CDN is removed from a port, it may be replaced by a decoupling network.

Withdrawn

Documents
Document Sharing Hub
Full document details: IEC 61000-4-6 2008 RLV

If the EUT has multiple identical ports (same input or output electronic circuits, loads, connected equipment, etc.), at least one of these ports shall be selected for testing to ensure that all different types of ports are covered.

7.2 Procedure for CDN injection application

When using the CDN injection, the following measures need to be taken.

– If the AE is located above the GRP, then it is to be placed 0,1 m above the GRP.

– One CDN shall be connected to the port intended to be tested and one CDN with 50 Ω termination shall be connected to another port. Decoupling networks shall be installed on all other ports to which cables are attached. In this manner there is only one loop terminated with 150 Ω at each end.

– The CDN to be terminated shall be chosen according to the following priority:

  1) CDN-M1 used for connection of the earth terminal;

  2) CDN-Sn (n = 1,2,3,..), which is closest to the injection point (shortest geometrical distance to the tested port);

  3) CDN-M2, CDN-M3, CDN-M4, or CDN-M5 used for mains;

  4) Other CDN, which is closest to the injection point (shortest geometrical distance to the tested port).

– If the EUT has only one port, that port is connected to the CDN used for injection.

– If at least one AE is connected to the EUT and only one CDN can be connected to the EUT, one port of the AE shall be connected to a CDN terminated with 50 Ω in accordance with the above-mentioned priority and other connections to the AE shall be decoupled.

7.3 Procedure for clamp injection when the common-mode impedance requirements can be met

When using clamp injection, the AE set-up shall present the common-mode impedance as required in 6.2 as closely as possible. Each AE used with clamp injection shall represent the functional installation conditions as closely as possible. To approximate the required common-mode impedance the following measures need to be taken.

– Each AE, used with clamp injection, shall be placed on an insulating support 0,1 m above the ground reference plane.

– A decoupling network shall be installed on each cable between the EUT and AE except the cable under test.

– All cables connected to each AE, other than those being connected to the EUT, shall be provided with decoupling networks, see 6.2.4 and Figure 6.

– The decoupling networks connected to each AE (except those on cables between the EUT and AE) shall be applied no further than 0,3 m from the AE. The cable(s) between the AE and the decoupling network(s) or in between the AE and the injection clamp shall not be bundled nor wrapped and shall be kept between 30 mm and 50 mm above the ground reference plane (Figure 6).

– At one end of the cable under test is the EUT, and at the opposite end is the AE. Multiple CDNs can be connected to the EUT and to the AE; however, only one CDN on each of the EUT and AE shall be terminated in 50 Ω. The termination of the CDN shall be chosen according to the priority in 7.2.

– When several clamps are used, the injection is carried out on each cable selected for testing one by one. The cables which are selected for testing with the injection clamp but not actually exercised shall be decoupled in accordance with 6.2.4.

In all other cases the procedure given in 7.4 should be followed.

Withdrawn

AVA Documents Document Sharing Hub

Full document details: IEC 61000-4-6 2008 RLV

7.4 Procedure for clamp injection when the common-mode impedance requirements cannot be met

When using clamp injection and the common-mode impedance requirements cannot be met at the AE side, it is necessary that the common-mode impedance of the AE be less than or equal to the common-mode impedance of the EUT port being tested. If not, measures shall be taken (e.g. by using a CDN-M1 or 150 Ω resistor from the AE to ground) at the AE port to satisfy this condition and to prevent resonances. In this procedure, only the relevant differences with those measures mentioned in 7.3 are given.

– Each AE and EUT used with clamp injection shall represent the functional installation conditions as closely as possible, e.g. the EUT shall either be connected to the ground reference plane or placed on an insulating support (see Figures A.6 and A.7).
– By means of an extra current probe (having low insertion loss), inserted in between the injection clamp and the EUT, the current resulting from the induced voltage (set according to 6.4.1) shall be monitored. If the current exceeds the nominal circuit value I_{max} given below, the test generator level shall be reduced until the measured current is equal to the I_{max} value:

$$I_{max} = U_0/150\ \Omega$$

The modified test voltage level applied shall be recorded in the test report.

To ensure reproducibility, the test set-up shall be fully described in the test report.

7.5 Procedure for direct injection

When using direct injection to screened cables, the following measures need to be taken.

– The EUT shall be placed on an insulating support of 0,1 m height above the ground reference plane.
– On the cable being tested, a decoupling network shall be located between the injection point and the AE, as close as possible to the injection point. A second port shall be loaded with 150 Ω (CDN with 50 Ω termination) This port shall be chosen according to the priority in 7.2. On all other cables attached to the EUT decoupling networks shall be installed. (When left open, a CDN is considered a decoupling network.)
– The injection point shall be located between 0,1 and 0,3 m from the geometric projection of the EUT on to the ground reference plane.
– The test signal shall be injected directly on to the shield of the cable through a 100 Ω resistor (see 6.2.3).

NOTE When making direct connection to foil shields, caution needs to be exercised to ensure a good connection producing reliable test results.

7.6 EUT comprising a single unit

The EUT shall be placed on an insulating support 0,1 m above the ground reference plane. For table-top equipment, the ground reference plane may be placed on a table (see Figure 9).

On all cables to be tested, coupling and decoupling devices shall be inserted (see 7.1.2). The coupling and decoupling devices shall be placed on the ground reference plane, making direct contact with it at a distance of 0,1 m to 0,3 m from the EUT. The cables between the coupling and decoupling devices and the EUT shall be as short as possible and shall not be bundled or wrapped. Their height above the ground reference plane shall be between 30 mm and 50 mm.

If the EUT is provided with other earth terminals, they shall, when allowed, be connected to the ground reference plane through the coupling and decoupling network CDN-M1, see 6.2.1.1 (i.e. the AE port of the CDN-M1 is then connected to the ground reference plane).

Withdrawn

AVA Documents Document Sharing Hub

Full document details: IEC 61000-4-6 2008 RLV

If the EUT is provided with a keyboard or hand-held accessory, then the artificial hand shall be placed on this keyboard or wrapped around the accessory and connected to the ground reference plane.

Auxiliary equipment (AE) required for the defined operation of the EUT according to the specifications of the product committee, e.g. communication equipment, modem, printer, sensor, etc., as well as auxiliary equipment necessary for ensuring any data transfer and assessment of the functions, shall be connected to the EUT through coupling and/or decoupling devices. As far as possible, the number of cables to be tested may be limited; however, all types of physical ports should be submitted to injection.

7.7 EUT comprising several units

Equipment comprising several units, which are interconnected, shall be tested using one of the following methods.

– **Preferred method**: Each sub-unit shall be treated and tested separately as an EUT (see 7.6), considering all others as AE. Coupling and decoupling devices (or CDNs) shall be placed on the cables (according to 7.1) of the sub-units considered as the EUT. All sub-units shall be tested in turn.

– **Alternative method**: Sub-units that are always connected together by short cables, i.e. ≤1 m, and that are part of the equipment to be tested, can be considered as one EUT. No conducted immunity test shall be performed on their interconnecting cables, these cables being regarded as internal cables of the system. See Figure 10.

The units being part of such an EUT shall be placed as close as possible to each other without making contact, all on the insulating support 0,1 m above the ground reference plane. The interconnecting cables of these units shall also be placed on the insulating support. Unterminated CDNs or decoupling devices shall be placed on all other cables of the EUT, e.g. on cables to the mains supply and auxiliary equipment (see 7.1).

8 Test procedure

The EUT shall be tested within its intended operating and climatic conditions. The temperature and relative humidity should be recorded in the test report.

Local interference regulations shall be adhered to with respect to the radiation from the test set-up. If the radiated energy exceeds the permitted level, a shielded enclosure shall be used.

NOTE 1 Generally, this test can be performed without using a well-shielded enclosure. This is because the disturbance levels applied and the geometry of the set-ups are not likely to radiate a high amount of energy, especially at the lower frequencies.

The test shall be performed with the test generator connected to each of the coupling devices (CDN, EM clamp, current injection probe) in turn. All other cables not under test, shall either be disconnected (when functionally allowed) or provided with decoupling networks or unterminated CDNs only.

A low-pass filter (LPF) and/or a high-pass filter (HPF), (e. g. 100 kHz cut-off frequency) may be required at the output of the test generator to prevent (higher order or sub-) harmonics from disturbing the EUT. The band stop characteristics of the low-pass filters (LPF) shall be sufficient to suppress the harmonics so that they do not affect the results. These filters shall be inserted after the test generator before setting the test level (see 6.1 and 6.4.1).

The frequency range is swept from 150 kHz to 80 MHz, using the signal levels established during the setting process, and with the disturbance signal 80 % amplitude modulated with a 1 kHz sine wave, pausing to adjust the RF signal level or to change coupling devices as necessary. Where the frequency is swept incrementally, the step size shall not exceed 1 % of the preceding frequency value. The dwell time of the amplitude modulated carrier at each

Withdrawn

AVA Documents Document Sharing Hub

Full document details: IEC 61000-4-6 2008 RLV

frequency shall not be less than the time necessary for the EUT to be exercised and to respond, but shall in no case be less than 0,5 s. The sensitive frequencies (e.g. clock frequencies) shall be analyzed separately.

NOTE 2 Since the EUT may be disturbed by transients occurring during frequency stepping, provisions should be made to avoid such disturbance. For example, before the frequency change, the strength of the signal can be decreased a few dB below the test level.

Attempts should be made to fully exercise the EUT during testing, and to fully interrogate all exercise modes selected for susceptibility.

The use of a special exercising program is recommended.

Testing shall be performed according to a test plan.

It may be necessary to carry out some investigatory testing in order to establish some aspects of the test plan.

9 Evaluation of the test results

The test results shall be classified in terms of the loss of function or degradation of performance of the equipment under test, relative to a performance level defined by its manufacturer or the requestor of the test or by agreement between the manufacturer and the purchaser of the product. The recommended classification is as follows:

a) normal performance within limits specified by the manufacturer, requestor or purchaser;

b) temporary loss of function or degradation of performance which ceases after the disturbance ceases, and from which the equipment under test recovers its normal performance, without operator intervention;

c) temporary loss of function or degradation of performance, the correction of which requires operator intervention;

d) loss of function or degradation of performance which is not recoverable, owing to damage to hardware or software, or loss of data.

The manufacturer's specification may define effects on the EUT which may be considered insignificant, and therefore acceptable.

This classification may be used as a guide in formulating performance criteria, by committees responsible for generic, product and product-family standards, or as a framework for the agreement on performance criteria between the manufacturer and the purchaser, for example where no suitable generic, product or product-family standard exists.

10 Test report

The test report shall contain all the information necessary to reproduce the test. In particular, the following shall be recorded:

– identification of the EUT and any associated equipment, e.g. brand name, product type, serial number;

– the size of the EUT;

– representative operating conditions of the EUT;

– whether the EUT is tested as a single or multiple unit;

– the types of interconnecting cables, including their length, and the interface port of the EUT to which they were connected;

– any specific conditions for use, for example cable length or type, shielding or grounding, or EUT operating conditions, which are required to achieve compliance;

Withdrawn

AVA Documents Document Sharing Hub

Full document details: IEC 61000-4-6 2008 RLV

- the recovery time of the EUT if necessary;
- the type of test facility used and the position of the EUT, AE(s) and coupling and decoupling devices;
- identification of the test equipment, e.g. brand name, product type, serial number;
- the coupling and decoupling devices used on each cable and their internal cable length;
- for each injection port, indicate which decoupling devices were terminated in 50 Ω;
- a description of the EUT exercising method;
- any specific conditions necessary to enable the test to be performed;
- the frequency range of application of the test;
- the rate of sweep frequency, dwell time and frequency steps;
- the applied test level;
- the performance level defined by the manufacturer, requestor or purchaser;
- the performance criteria that have been applied;
- any effects on the EUT observed during or after application of the test disturbance and the duration for which these effects persist;
- the rationale for the pass/fail decision (based on the performance criterion specified in the generic, product or product-family standard, or agreed between the manufacturer and the purchaser).

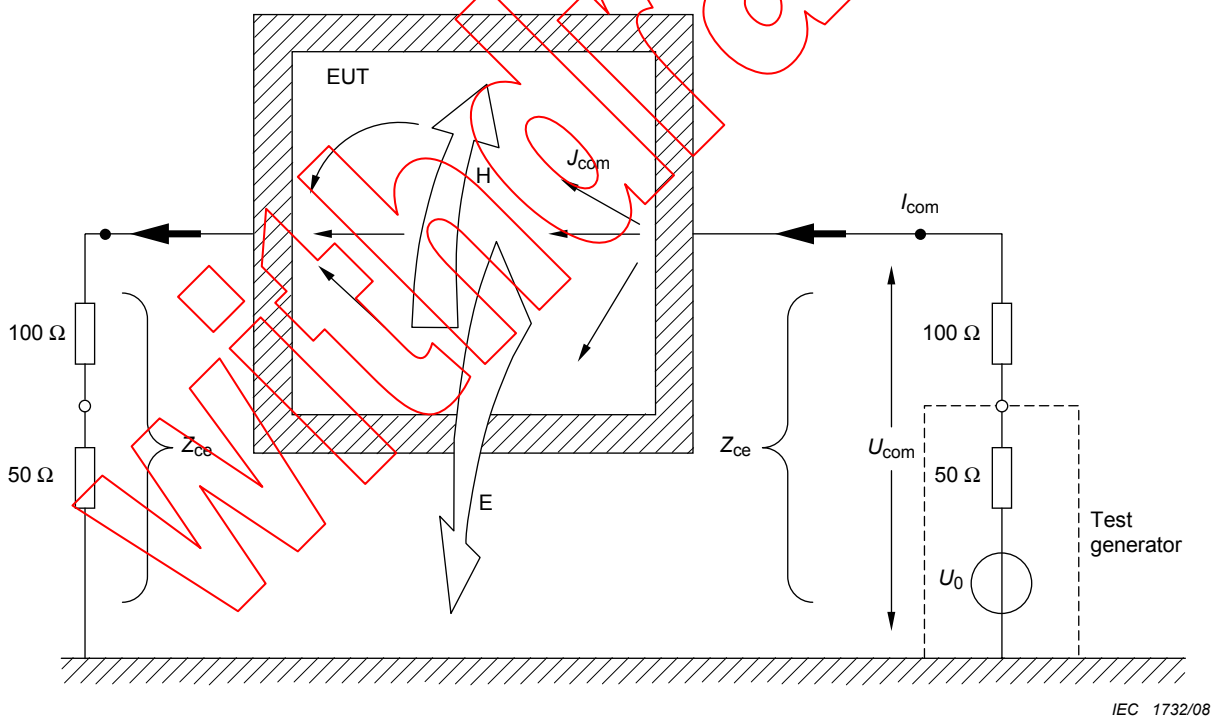

Z_{ce} Common-mode impedance of the coupling and decoupling network system, Z_{ce} = 150 Ω

U_0 Test generator source voltage (e.m.f.)

U_{com} Common-mode voltage between EUT and reference plane

I_{com} Common-mode current through the EUT

J_{com} Current density on conducting surface or current on other conductors of the EUT

E, H Electric and magnetic fields

NOTE The 100 Ω resistors are included in the coupling and decoupling networks. The left input is loaded by a (passive) 50 Ω load and the right input is loaded by the source impedance of the test generator.

Figure 2a – Diagram showing EM fields near the EUT due to common-mode currents on its cables

Withdrawn
AVA Documents Document Sharing Hub
Full document details: IEC 61000-4-6 2008 RLV

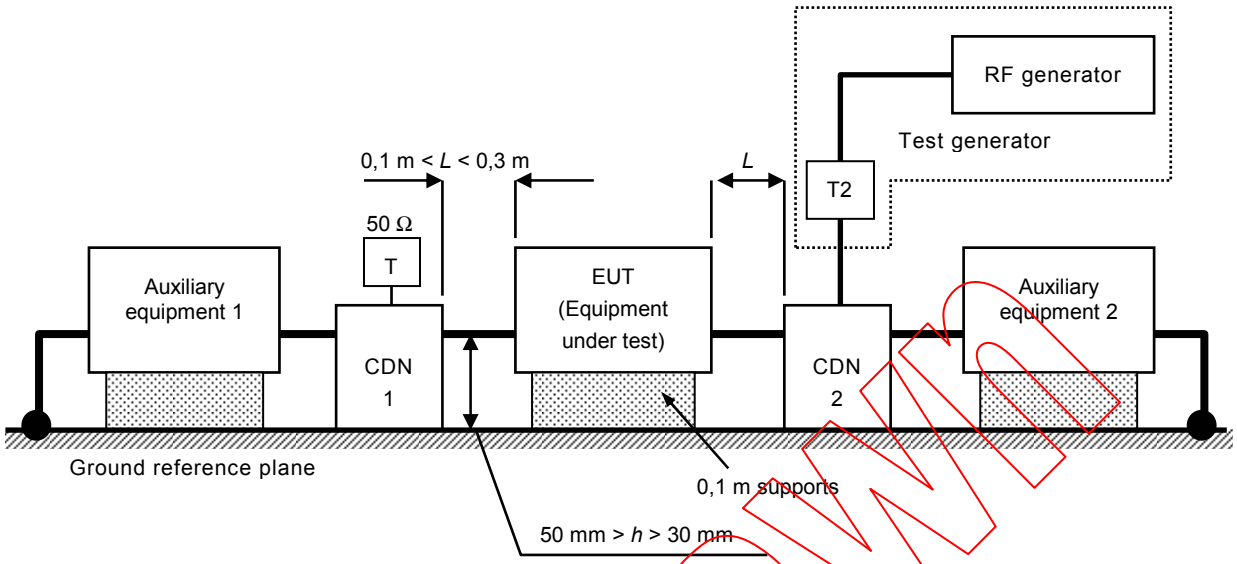

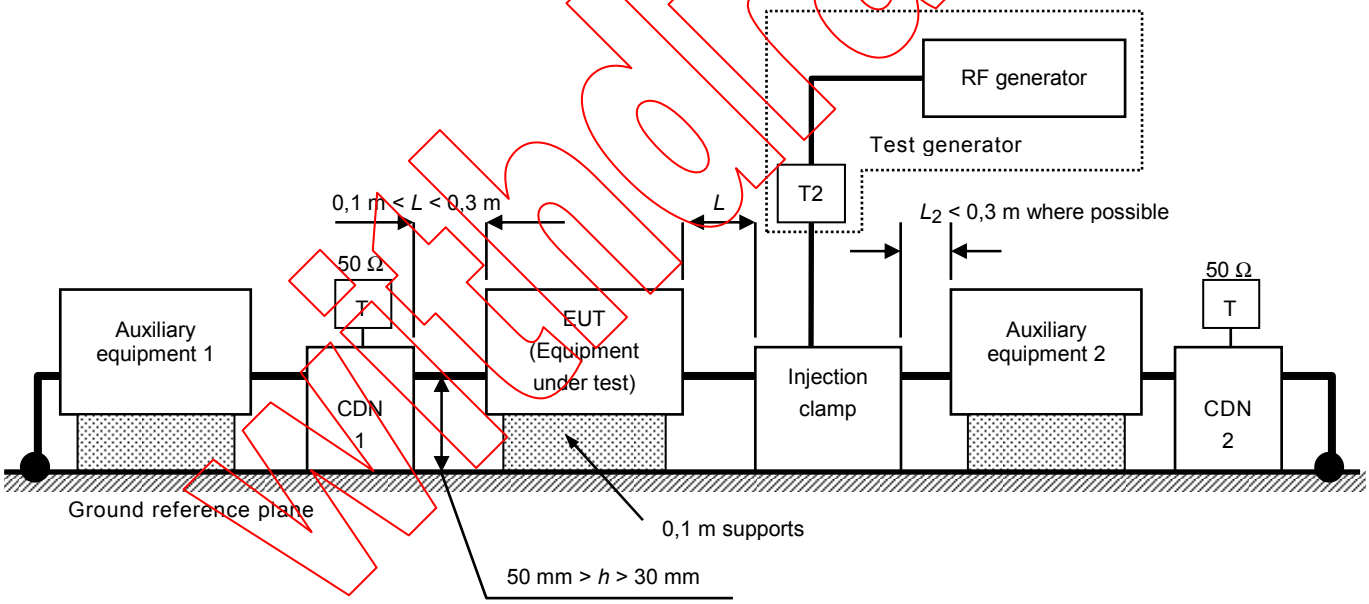

withdrawn

T termination 50 Ω

T2 power attenuator (6 dB)

CDN coupling and decoupling network

Injection clamp current clamp or EM clamp

Figure 2b – Schematic set-up for immunity test to RF conducted disturbances

Figure 2 – Immunity test to RF conducted disturbances

Documents
Document Sharing Hub
Full document details: IEC 61000-4-6 2008 RLV

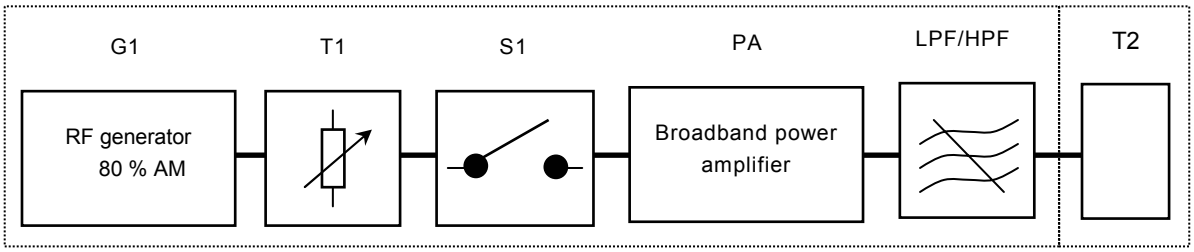

G1	RF generator	T1	Variable attenuator
PA	Broadband power amplifier	T2	Fixed attenuator (6 dB)
LPF/HPF	Low pass filter and/or high pass filter	S1	RF switch

Figure 3 – Test generator set-up

Withdrawn

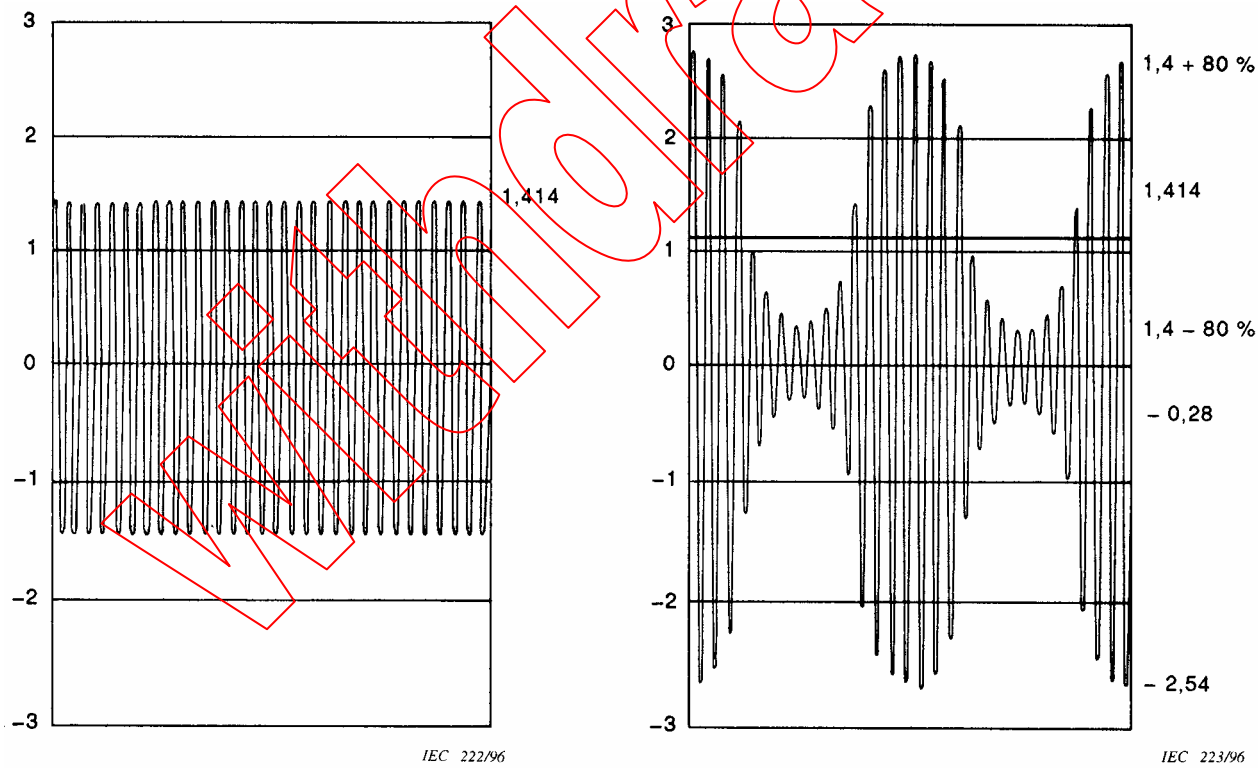

Figure 4a – Unmodulated RF signal

U_{pp} = 2,82 V, U_{rms} = 1,00 V

Figure 4b – Modulated RF signal 80 % AM

U_{pp} = 5,09 V, U_{rms} = 1,12 V

Figure 4 – Open circuit waveforms at the EUT port of a coupling device for test level 1

AVA Documents
Document Sharing Hub
Full document details: IEC 61000-4-6 2008 RLV

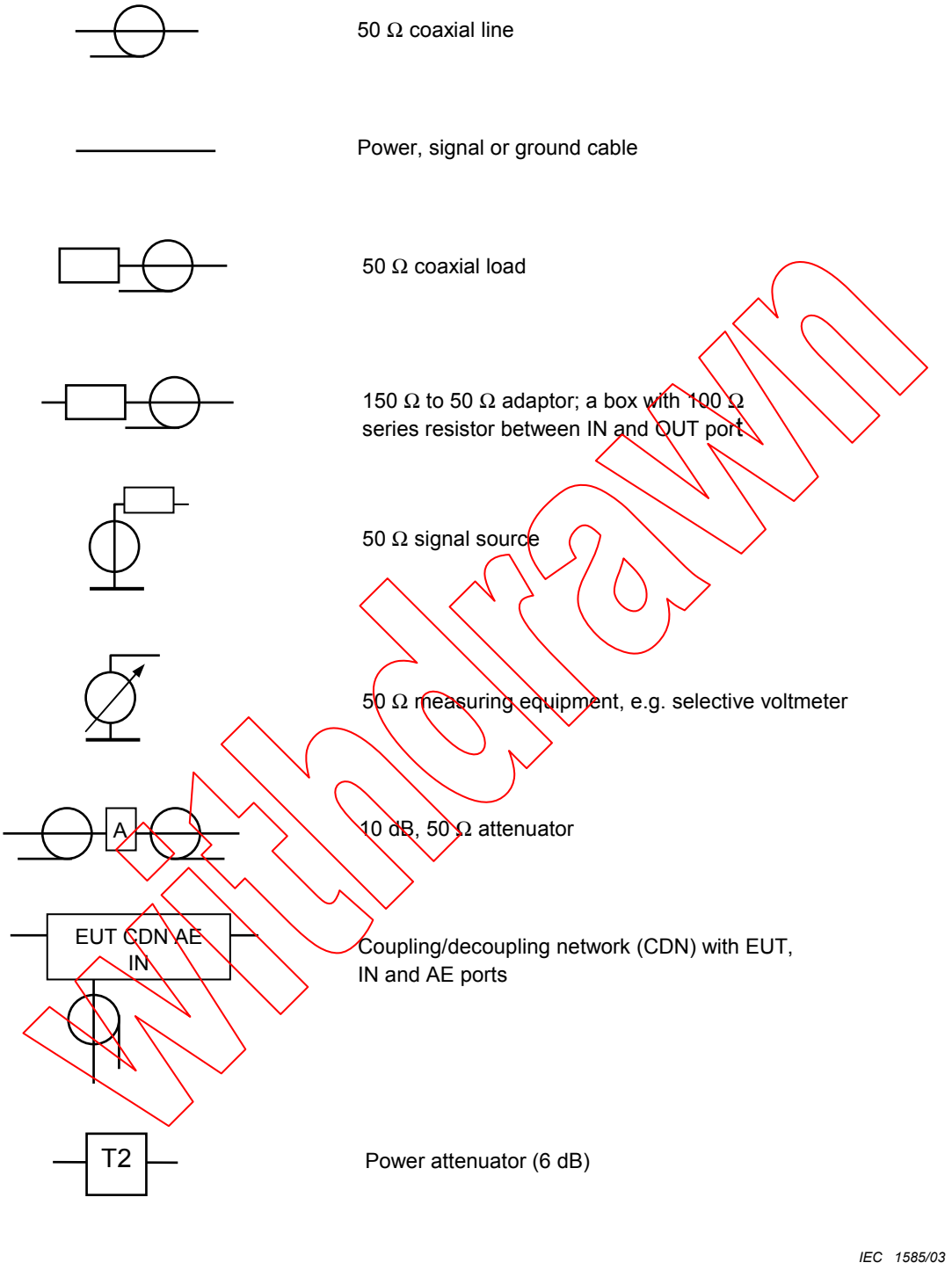

Figure 5a – List of symbols used for the indicated set-up principles

Withdrawn

Documents
Document Sharing Hub
Full document details: IEC 61000-4-6 2008 RLV

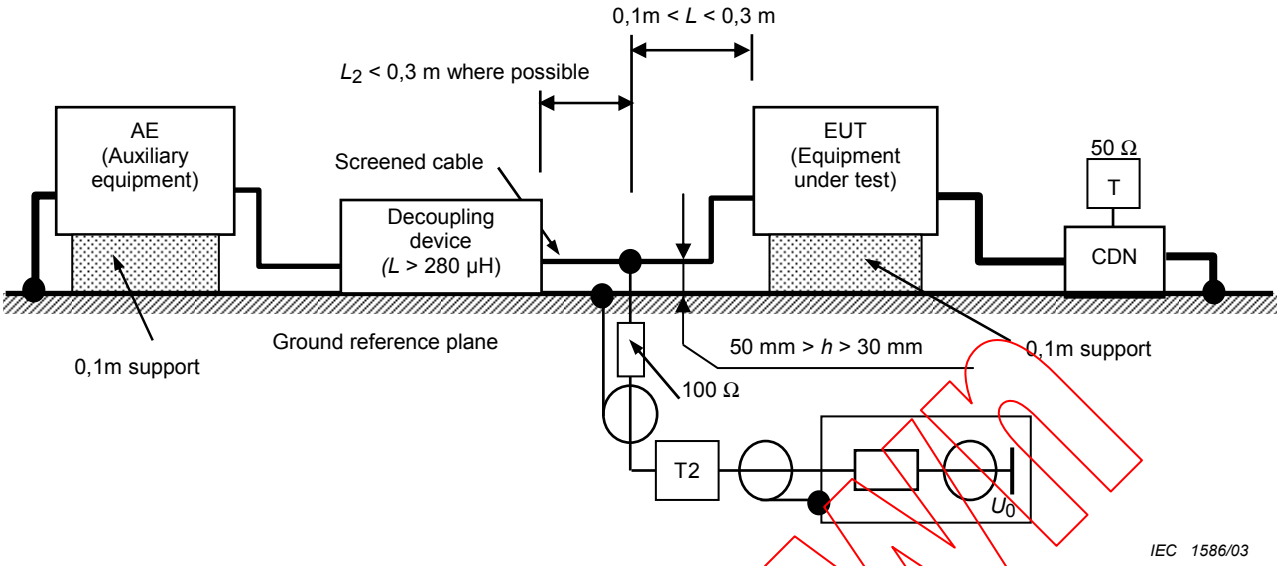

Figure 5b – Principle of direct injection to screened cables

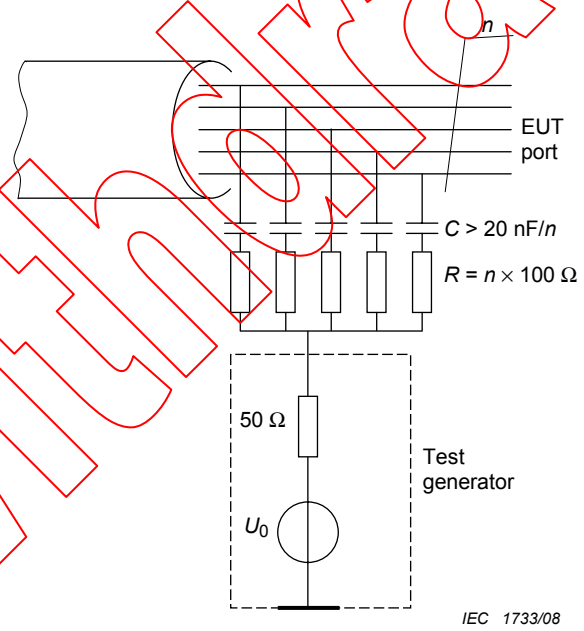

Figure 5c – Principle of coupling to unscreened cables

Withdrawn

Documents
Document Sharing Hub
Full document details: IEC 61000-4-6 2008 RLV

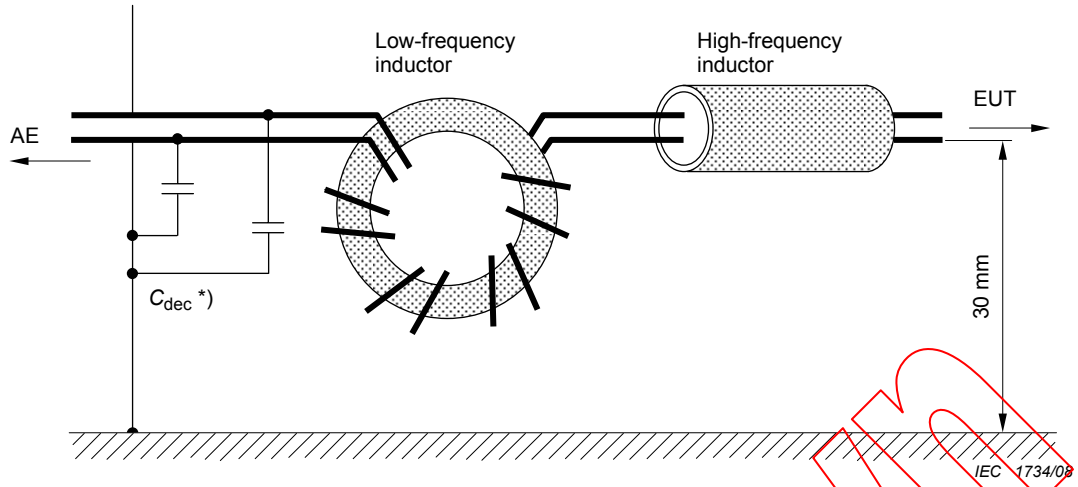

Example: Typically C_{dec} = 47 nF (only on unscreened cables), $L_{(150\ kHz)} \geq 280\ \mu H$

Low frequency inductor: 17 turns on a ferrite toroid material: NiZn, μ_R = 1 200

High frequency inductor: 2-4 ferrite toroids (forming a tube), material: NiZn, μ_R = 700

Figure 5d – Principle of decoupling

Figure 5 – Principle of coupling and decoupling

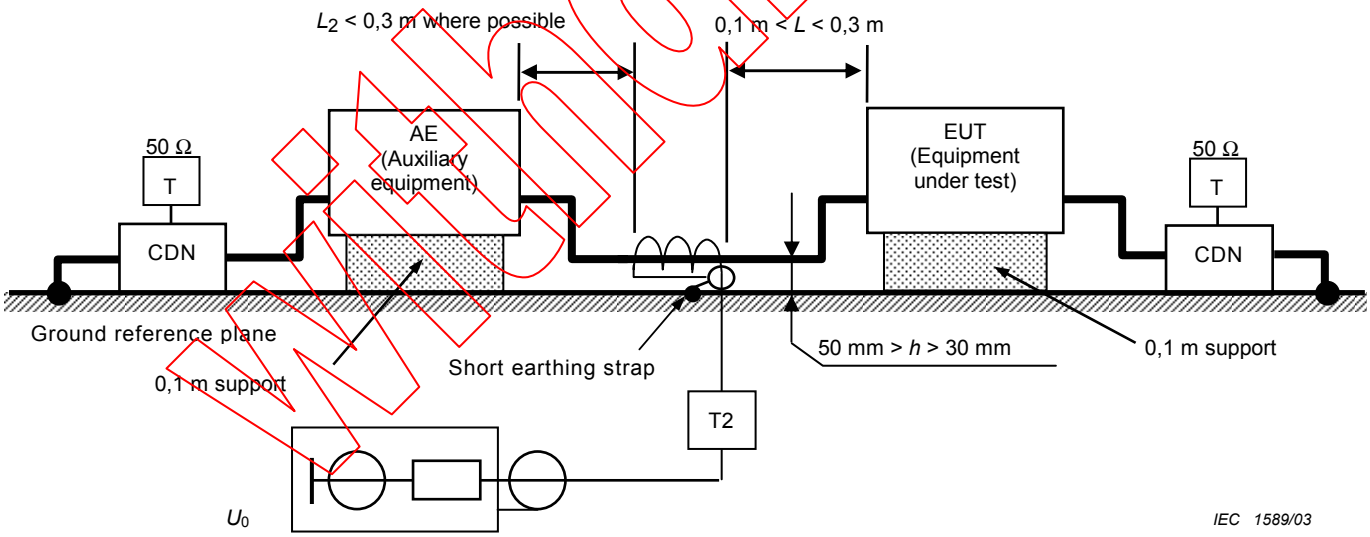

The CDN connected to the AE, e.g. CDN-M1 connected to the dedicated earth terminal or CDN-M3, shall be terminated with 50 Ω at the input port (see 7.4).

Figure 6 – Principle of coupling and decoupling according to the clamp injection method

Withdrawn

Documents
Document Sharing Hub
Full document details: IEC 61000-4-6 2008 RLV

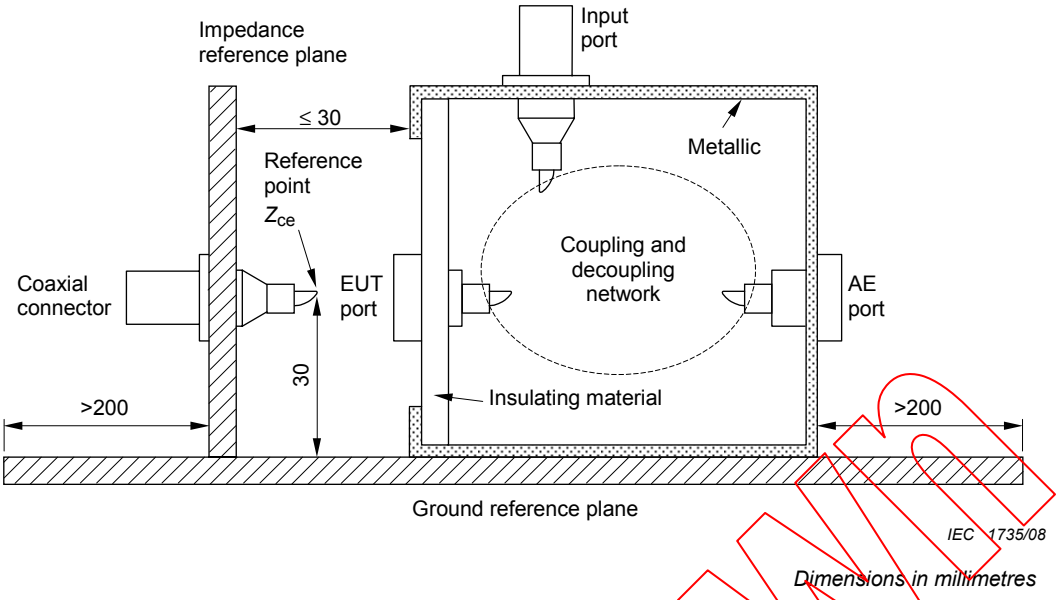

– Ground reference plane: shall exceed the projection of the coupling and decoupling devices and other components by at least 0,2 m.

– The EUT port is 30 mm high above the GRP.

– Impedance reference plane (with BNC connector): 0,1 m × 0,1 m.

– Both planes shall be made out of copper, brass or aluminium and must have good RF contact.

Figure 7a – Example of the set-up geometry to verify the impedance characteristics of the coupling and decoupling devices

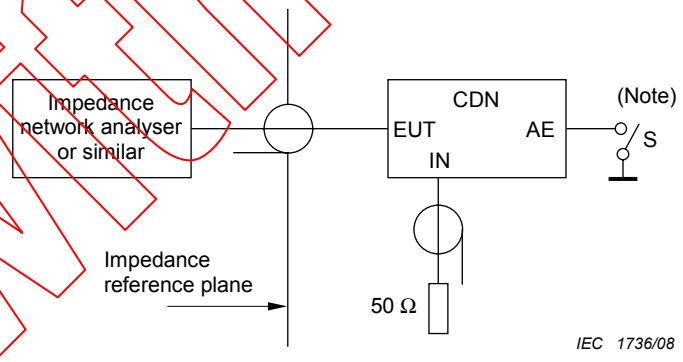

NOTE The impedance requirement shall be met with open and closed switch S (see 6.3).

Figure 7b – Set-up principle to verify Z_{ce} of the coupling and decoupling device

Withdrawn

Documents
Document Sharing Hub
Full document details: IEC 61000-4-6 2008 RLV

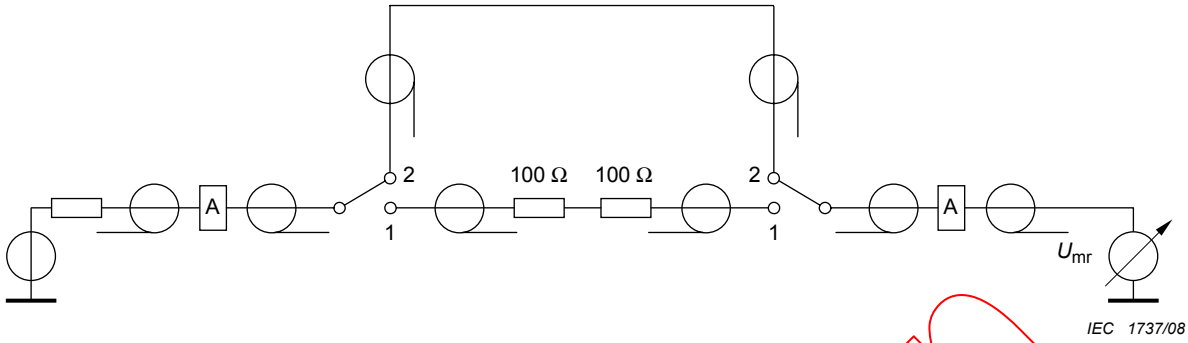

Insertion loss = U_{mr} (switches position 2) – U_{mr} (switches position 1)

dB dB(µV) dB(µV)

Figure 7c – Set-up principle for measuring the insertion loss of two 150 Ω to 50 Ω adapters

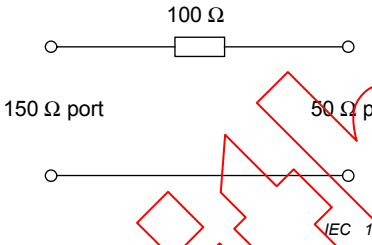

NOTE Low inductance resistor: Power rating ≥ 2,5 W

Figure 7d – Circuit of the 150 Ω to 50 Ω adapter

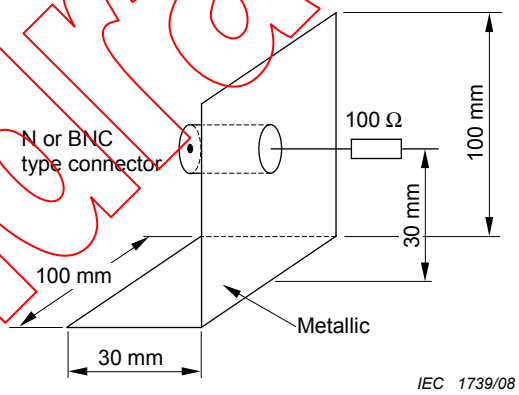

NOTE Identical with Figure 7a (impedance reference plane), but with 100 Ω low inductance resistor added.

Figure 7e – Construction diagram of the 150 Ω to 50 Ω adapter

Figure 7 – Details of set-ups and components to verify the essential characteristics of coupling and decoupling devices and the 150 Ω to 50 Ω adapters

Withdrawn

Documents
Document Sharing Hub
Full document details: IEC 61000-4-6 2008 RLV

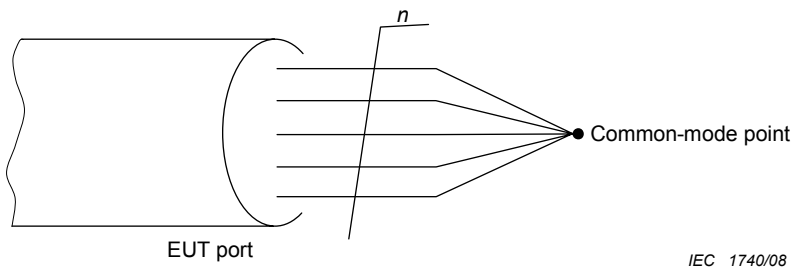

Figure 8a – Definition of a common mode point with unscreened cables

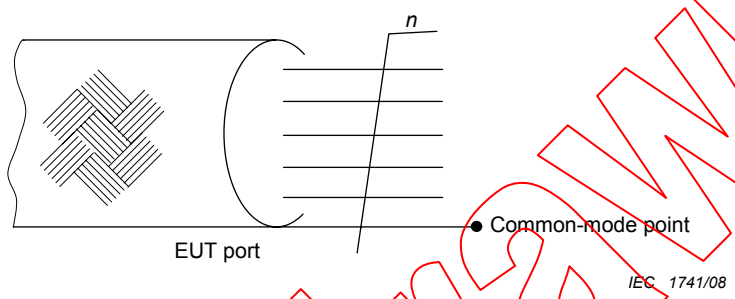

Figure 8b – Definition of a common mode point with screened cables

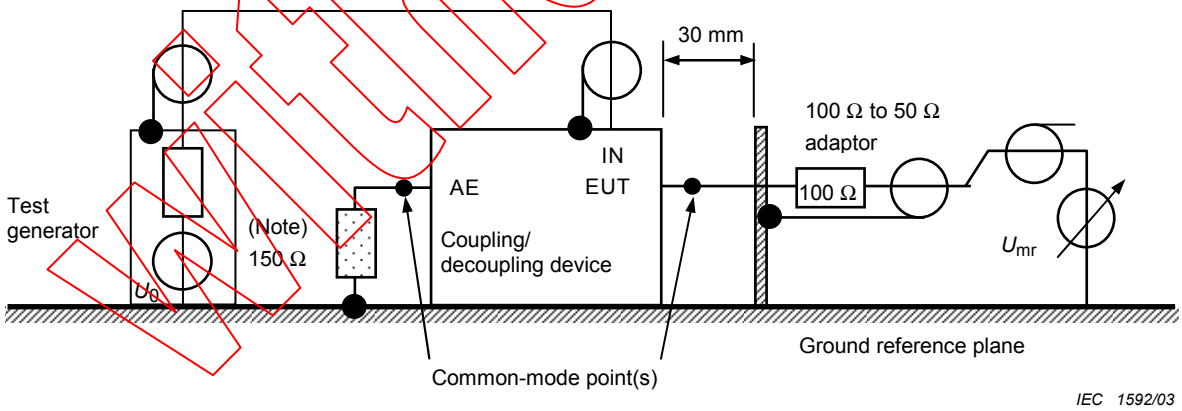

Examples of coupling and decoupling devices:

– coupling/decoupling networks (CDNs);

– direct injection network (with decoupling);

– clamp injection device (EM clamp).

NOTE The 150 Ω loading, e.g. a 150 Ω to 50 Ω adapter terminated with a 50 Ω load, at the AE-port shall only be applied to unscreened cables (screened cables have their screens connected to the ground reference plane at the AE-side).

Figure 8c – Set-up for level setting at the EUT port of coupling/decoupling devices

Figure 8 – Set-up for level setting (see 6.4.1)

Withdrawn

Documents
Document Sharing Hub
Full document details: IEC 61000-4-6 2008 RLV

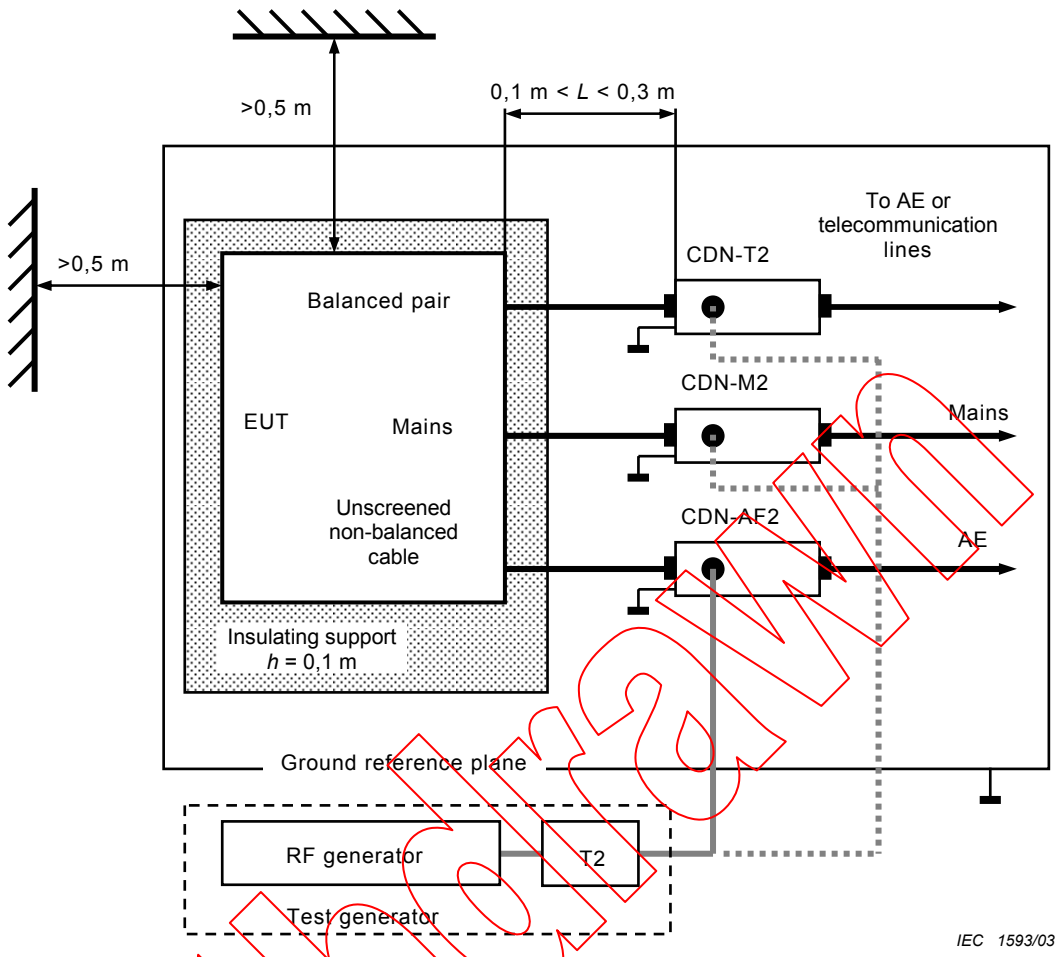

The EUT clearance from any metallic objects shall be at least 0,5 m.

Figure 9 – Example of test set-up with a single unit EUT

Withdrawn

Documents
Document Sharing Hub
Full document details: IEC 61000-4-6 2008 RLV

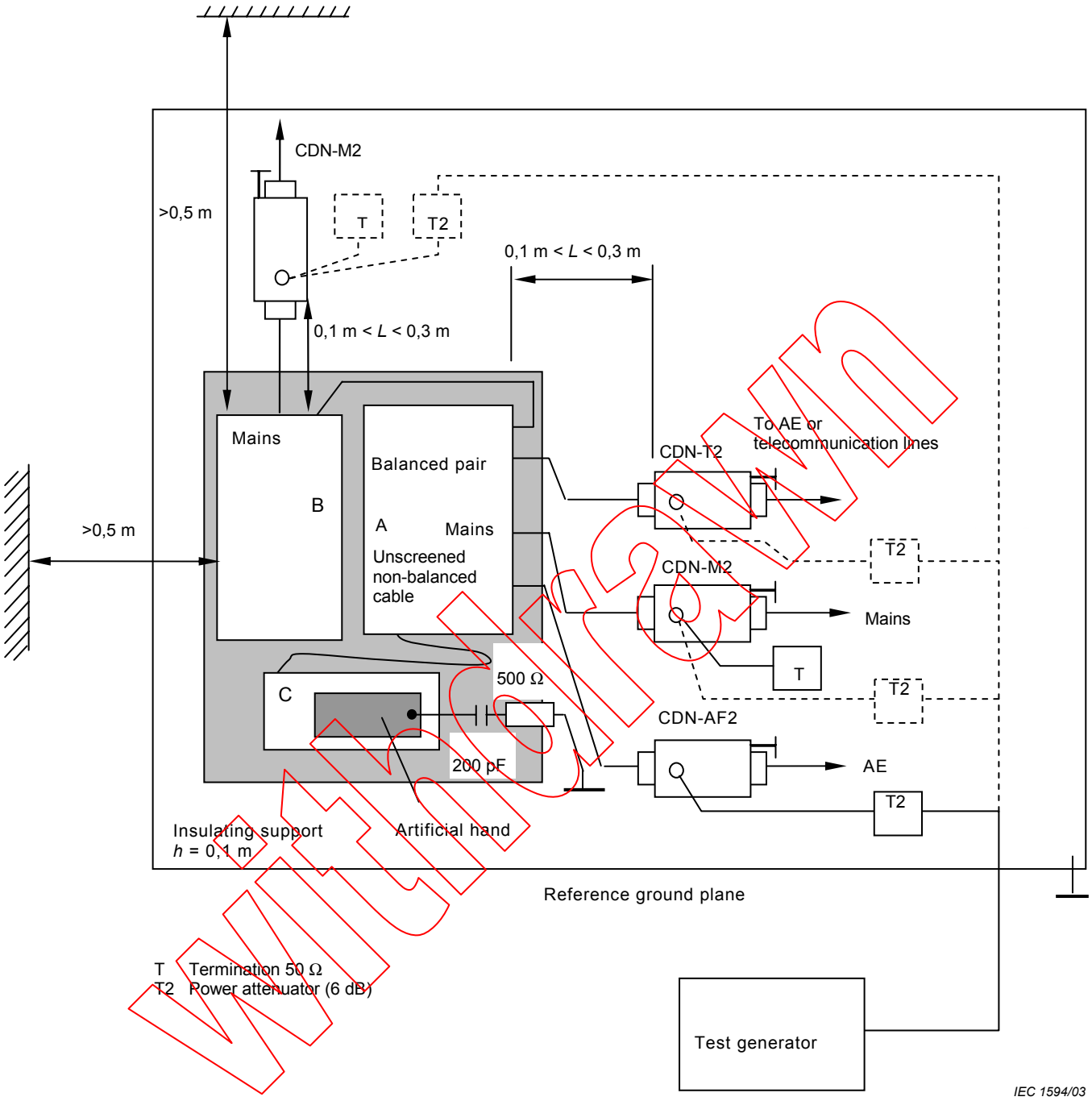

The EUT clearance from any metallic obstacles shall be at least 0,5 m

Only one of the CDNs not used for injection shall be terminated with 50 Ω, providing only one return path. All other CDNs shall be coupled as decoupling networks.

Interconnecting cables (≤ 1 m) belonging to the EUT shall remain on the insulating support.

Figure 10 – Example of a test set-up with a multi-unit EUT

Documents
Document Sharing Hub
Full document details: IEC 61000-4-6 2008 RLV

Annex A
(normative)

Additional information regarding clamp injection

A.1 Current injection clamp

The required performance of the current clamp is that the transmission loss of the test jig shall not exceed 1 dB when tested in a 50 Ω system with a current clamp installed and terminated at its input port by a 50 Ω load. A circuit of the level setting set-up is given in Figure A.1 and a drawing of the test jig is given in Figure A.2.

The signal level applied to the current injection clamp is set prior to the test. The test level setting procedure is given in 6.4.1 and Figure 8. When the level setting is not carried out in a 150 Ω impedance environment but in a 50 Ω test jig, the following procedure shall be followed.

– The screen of the cable connected to the input port of the injection clamp shall also be connected to the test jig's reference plane by a low impedance connection.
– The test jig shall be terminated at one end with a 50 Ω coaxial load and at the other end with a power attenuator with a VSWR less than 1,2 over the frequency range of interest. The power attenuator shall be connected to the 50 Ω input of an RF voltmeter or an RF spectrum analyzer.
– The output level of the generator shall be increased until the voltage level referenced to the output connector of the test jig reaches the required test level, U_0, minus 6 dB, see 6.4.1. The output level of the generator shall be recorded at each step frequency.

A.2 EM clamp

The construction and concept of the EM clamp are given in Figures A.3, A.4 and A.5.

The EM clamp (in contrast to the conventional current injection clamp) has a directivity ≥ 10 dB, above 10 MHz, so that a defined impedance between the common-mode point of the AE and the ground reference plane is no longer required. Above 10 MHz, the behaviour of the EM clamp is similar to that of a CDN.

The level setting procedure for the EM clamp shall be carried out according to 6.4.1 in a 150 Ω environment as indicated in Figure 8.

A.3 Test set-up

To undertake the test, the clamp(s) shall be placed on the cable to be tested. The clamp shall be supplied with the test generator level previously established during the level setting procedure.

During a test, a ground connection shall be made from the screen of the input port of the current injection clamp or the earth bar of the EM clamp, to the ground reference plane (see Figures A.6 and A.7).

Withdrawn

AVA Documents Document Sharing Hub

Full document details: IEC 61000-4-6 2008 RLV

If, during testing, the monitored current, both with the EM clamp and with the current clamp, exceeds the nominal circuit current value (see 7.4), then the test generator output level shall be reduced until the current equals this nominal circuit current level. The reduced test generator output value level shall be recorded in the test report.

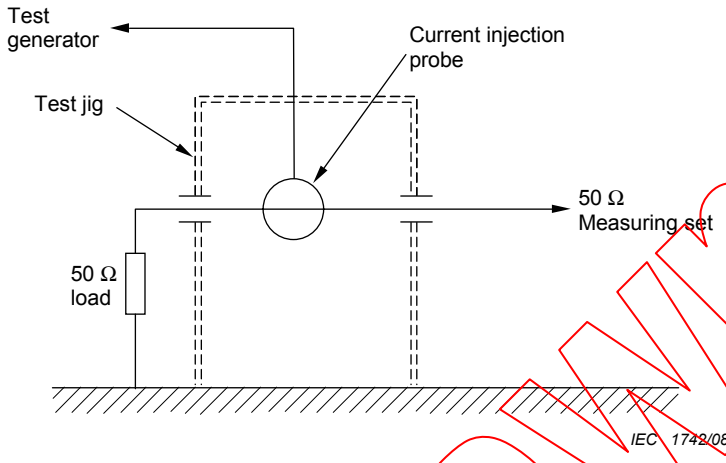

Figure A.1 – Circuit for level setting set-up in a 50 Ω test Jig

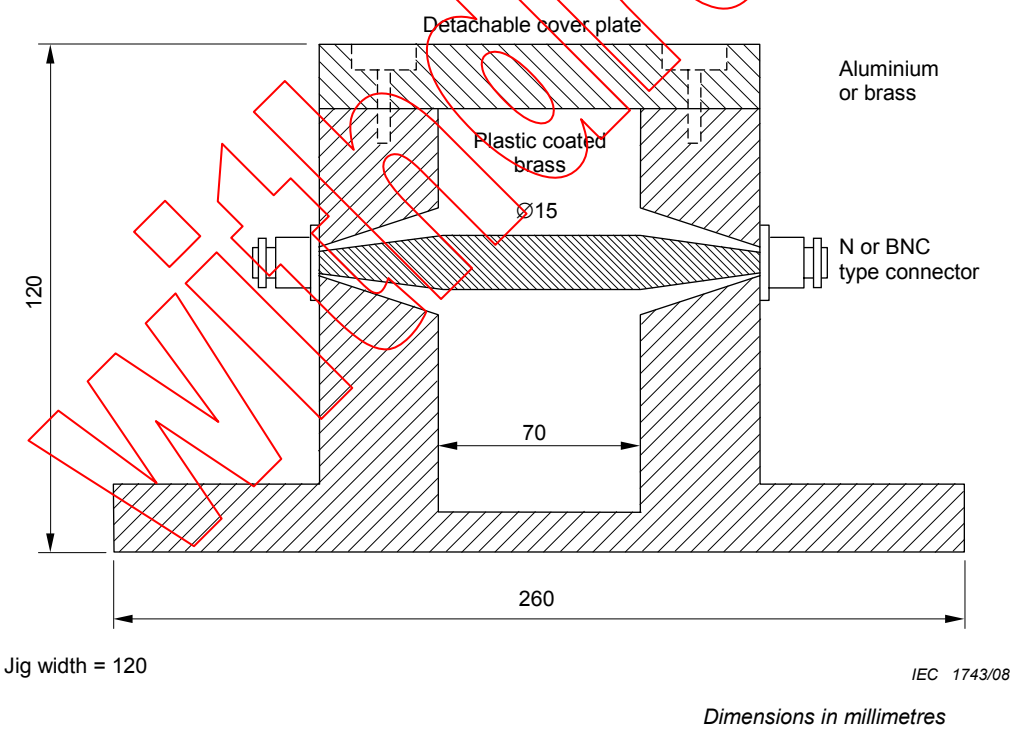

Figure A.2 – The 50 Ω test jig construction

Withdrawn

Documents
Document Sharing Hub
Full document details: IEC 61000-4-6 2008 RLV

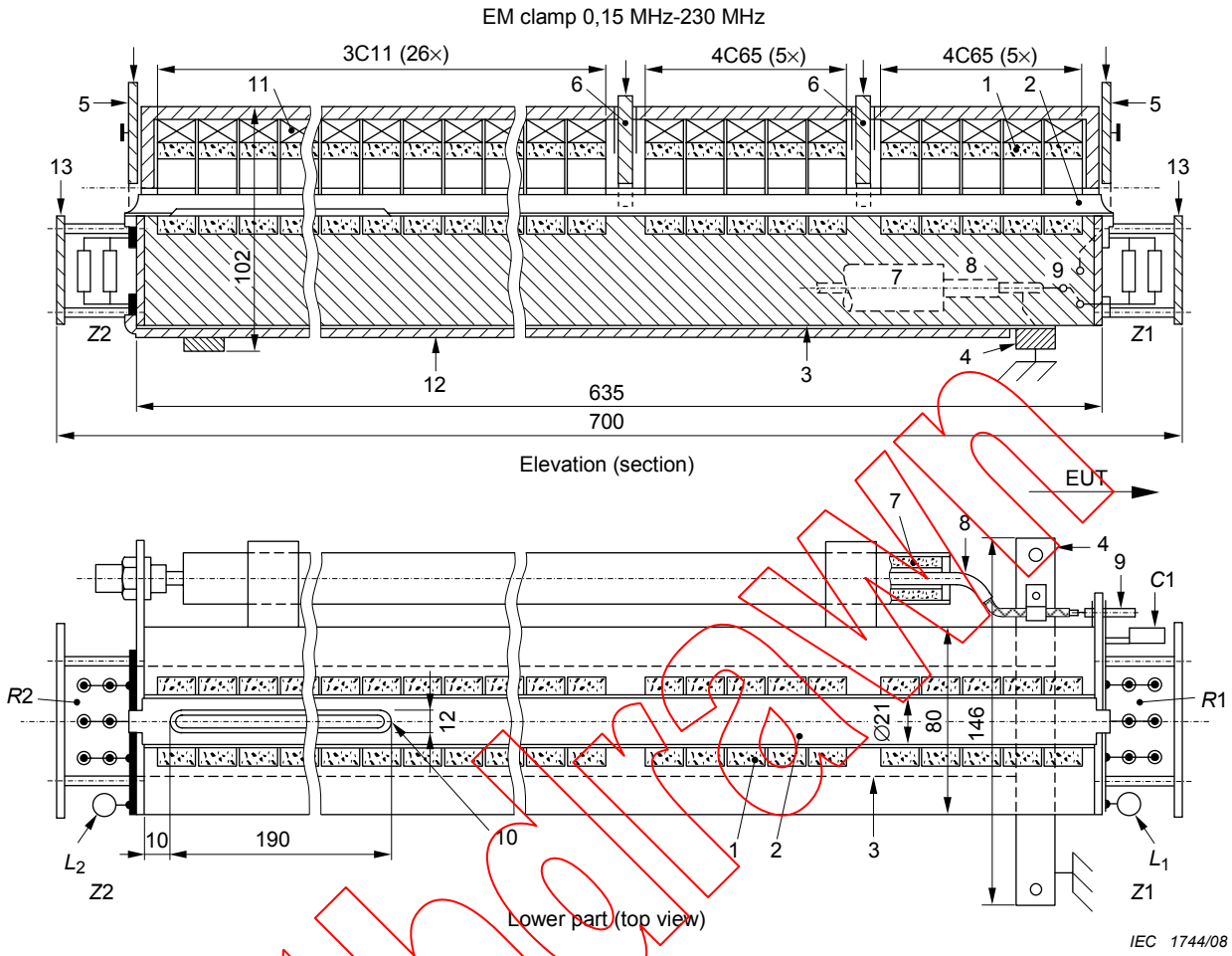

Dimensions in millimetres

Components

1	Ferrite ring cores ∅ 36 × ∅ 23 × 15 mm
	10 rings, type 4C65, NiZn, μ ≈ 100
	26 rings, type 3C11, MnZn, μ ≈ 4 300
2	Semi-cylinder of copper foil glued to the groove
3	Lower conductor plate
4	Earth bar
5/6	Devices for pressing the cable under test into the groove
	Parts from insulating material with pressure springs (not shown)
7	Ferrite tube, 4C65
8	Coaxial cable, 50 Ω with BNC connector
9	Switch for the disconnection of *Z*1
10	Slot for part No. 2
11	Elastic fixing of ferrite (upper semi-ring)
12	Lower insulating plate
13	Protection plate for *Z*1, *Z*2
EUT	Equipment under test
*Z*1	Series impedance: C_1: 20-100 pF, L_1: 0,15 μH, *R*1: 50 Ω / 12 W
*Z*2	Series impedance: L_2: 0,8 μH, *R*2: 50 Ω / 12 W

Figure A.3 – Construction details of the EM clamp

Withdrawn

Documents
Document Sharing Hub
Full document details: IEC 61000-4-6 2008 RLV

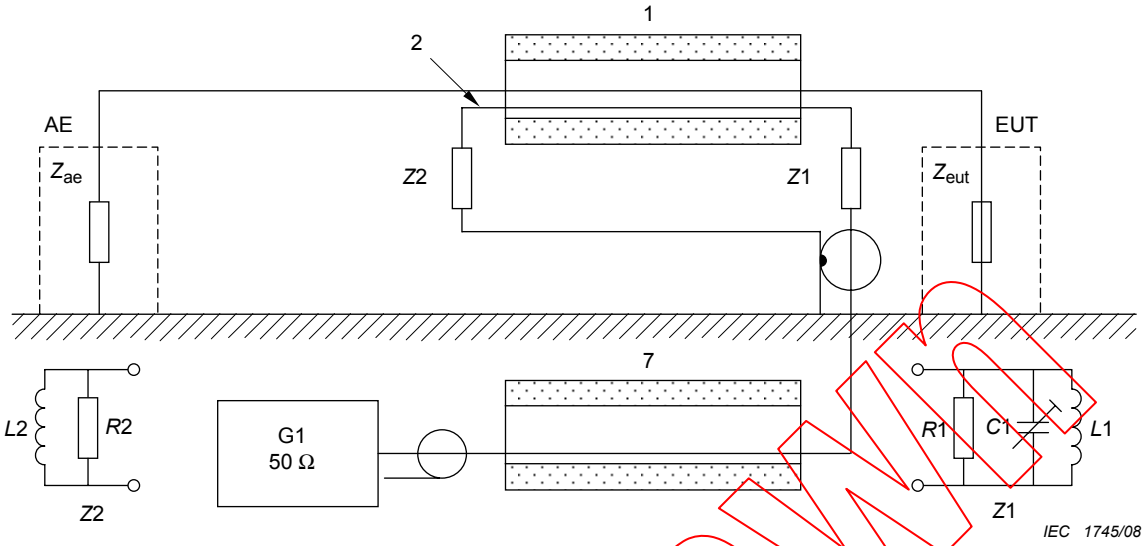

Components:

1 Ferrite tube (clamp) length 0,6 m, ∅ 20 mm, consisting of 10 rings, 4C65 (μ ≈ 100) at the EUT side and 26 rings 3C11 (μ ≈ 4 300) at AE side

2 Semi cylinder of copper foil

7 Ferrite tube (μ ≈100) included in the EM clamp construction

*Z*1, *Z*2 built in to optimize the frequency response and directivity

G1 Test generator

Principle of the EM clamp:

– magnetic coupling by the ferrite tube (item 1);

– electric coupling by close proximity between EUT cable and copper foil (item 2).

Figure A.4 – Concept of the EM clamp (electromagnetic clamp)

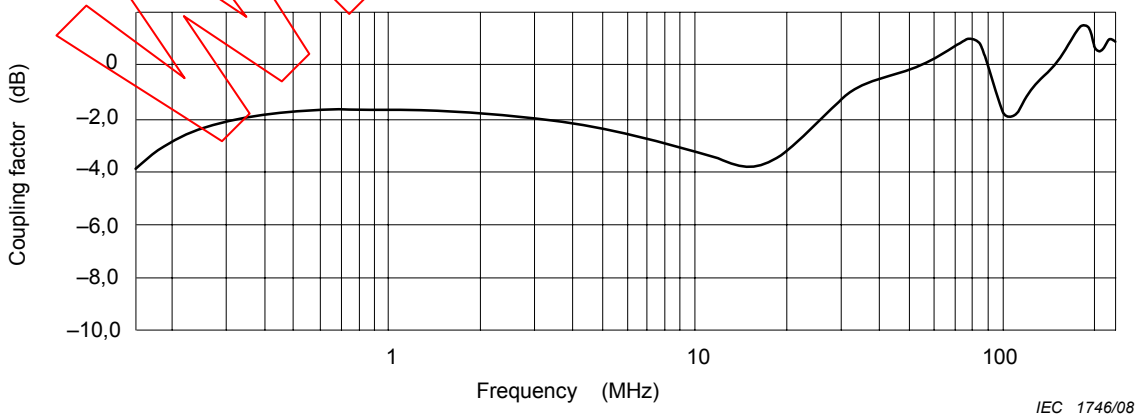

Typical characteristics of a commercially available construction of the EM clamp:

– Operating frequency range: 0,15 MHz to 230 MHz

– Frequency response of the coupling factor of the EM clamp

– Direct coupling and decoupling EUT/AE ≥ 10 dB beyond 10 MHz

Figure A.5 – Coupling factor of the EM clamp

Withdrawn
Documents
Document Sharing Hub
Full document details: IEC 61000-4-6 2008 RLV

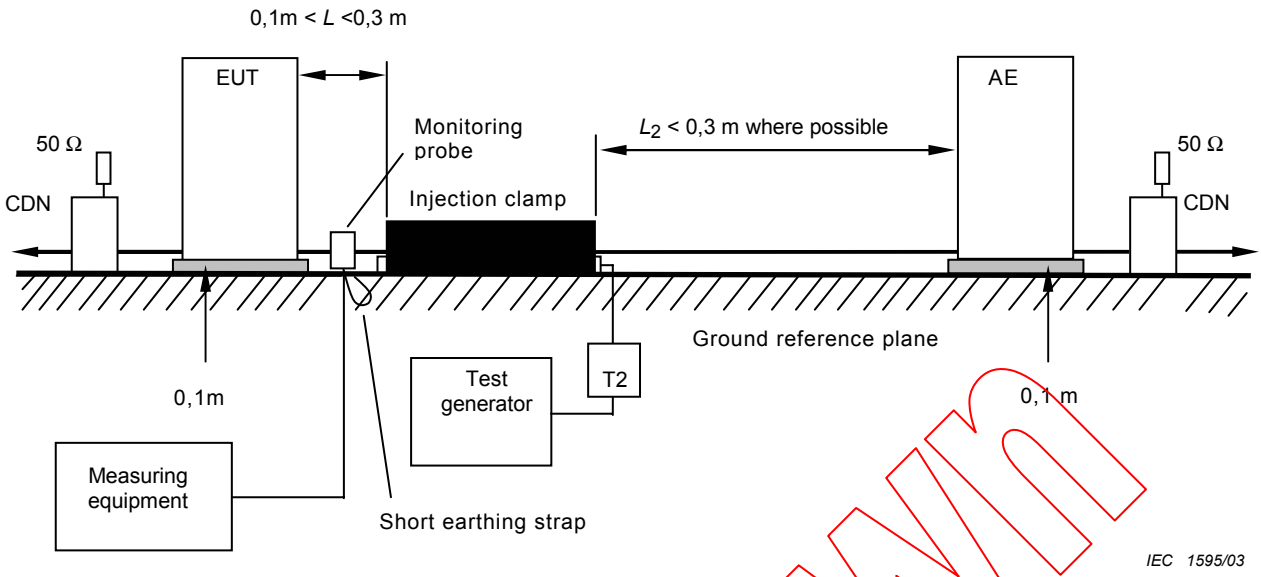

Figure A.6 – General principle of a test set-up using injection clamps

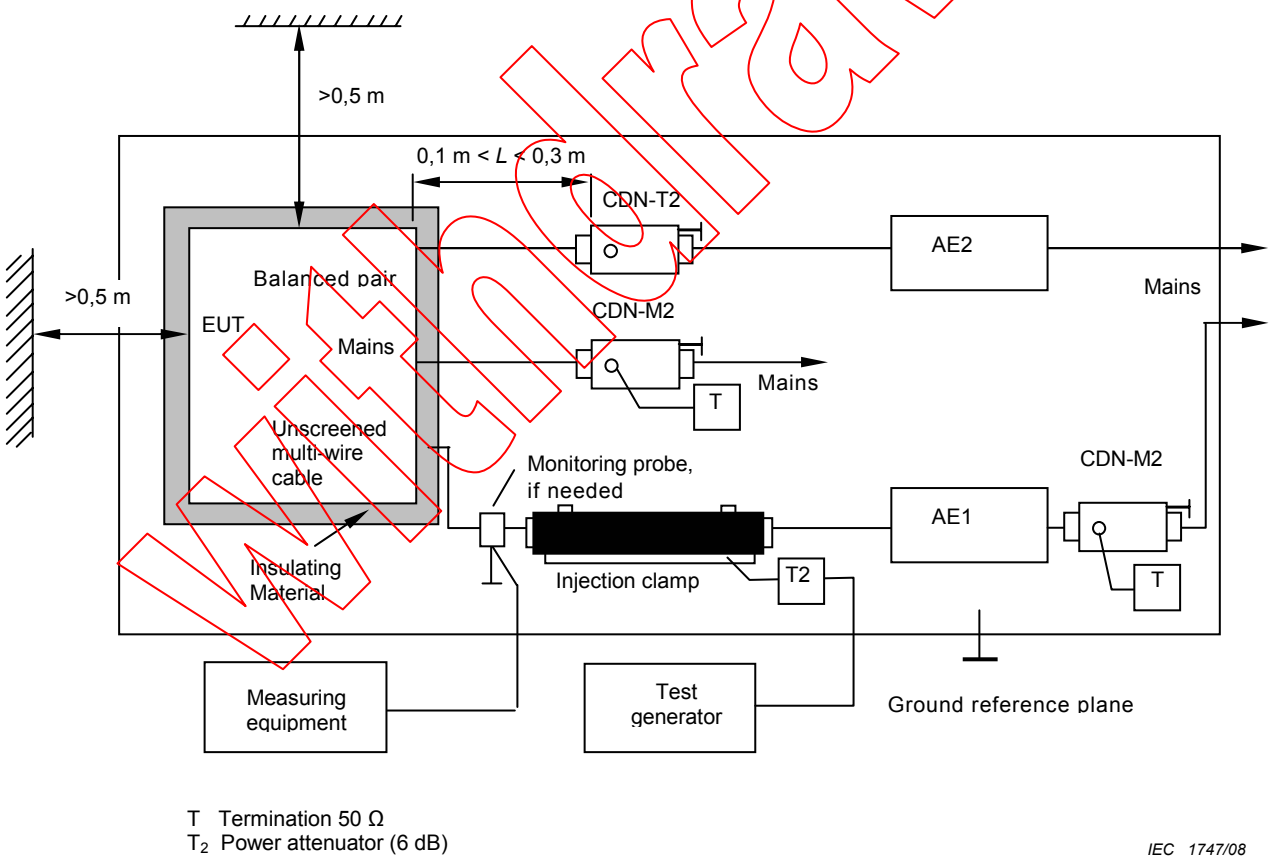

The EUT clearance from any metallic obstacles shall be at least 0,5 m.

For the test condition of CDN, refer to the Figures 2, 9 and 10.

Figure A.7 – Example of the test unit locations on the ground plane when using injection clamps (top view)

Withdrawn

Documents
Document Sharing Hub
Full document details: IEC 61000-4-6 2008 RLV

Annex B
(informative)

Selection criteria for the frequency range of application

Although the requirements in the standard are specified for the frequency range 150 kHz up to 80 MHz, the applicable frequency range depends on the normal installation and operation conditions of the equipment to be tested. For example: a small battery-powered equipment with total dimensions less than 0,4 m and without any metallic cable(s) connected thereto, does not need to be tested below 80 MHz because it is unlikely that the induced RF energy resulting from the disturbing EM field will upset the device.

In general, the stop frequency will be 80 MHz. In some cases, where small-sized equipment is considered (dimension < λ/4), dedicated product standards may prescribe that the stop frequency is extended up to a maximum of 230 MHz. The coupling and decoupling devices in this case shall then meet the parameter of common-mode impedance seen at the EUT port specified in Table B.1 below. When using this test method up to higher frequencies, results are influenced by: the size of equipment, the type(s) of interconnecting cables used, and the availability of special CDNs, etc. Further guidance for proper application should be supplied in the dedicated product standards.

Table B.1 – Main parameter of the combination of the coupling and decoupling device when the frequency range of test is extended above 80 MHz

	Frequency band		
Parameter	0,15 MHz – 26 MHz	26 MHz – 80 MHz	80 MHz – 230 MHz
$\lvert Z_{ce} \rvert$	150 Ω ± 20 Ω	150 Ω + 60 Ω – 45 Ω	150 Ω + 60 Ω – 60 Ω

NOTE 1 Neither the argument of Z_{ce} nor the decoupling factor between the EUT port and the AE port are specified separately. These factors are embodied in the requirement that the tolerance of $\lvert Z_{ce} \rvert$ shall be met with the AE-port open or short-circuited to the ground reference plane.

NOTE 2 When clamp injection methods are used, without complying with the common-mode impedance requirements for the auxiliary equipment, the requirements of Z_{ce} may not be met. However, the injection clamps can provide acceptable test results when the guidance of 7.4 is followed.

The start frequency depends on whether the equipment including its connected cables is capable of receiving a large amount of RF energy from the disturbing EM field.

Three different situations are considered.

a) Battery-powered equipment (dimension < λ/4) which has no connection(s) to ground nor to any other equipment and which will not be used during battery charging, does not need to be tested according to this standard. If the equipment will be operated during battery charging, case b) or c) applies.

   For battery-powered equipment (dimension ≥ λ/4), its size, including the maximum length of the cables connected, determine the start frequency, Figure B.1.

b) Equipment connected to a (power) mains network but not connected to any other equipment or cables.

   The power supply is provided via a coupling and decoupling device and the equipment is loaded by an artificial hand. The start frequency is 150 kHz.

c) Equipment connected to a (power) mains network which is also connected via control and I/O or telecommunication cables to other insulated or non-insulated equipment.

The start frequency is 150 kHz.

Withdrawn

AVA Documents Document Sharing Hub

Full document details: IEC 61000-4-6 2008 RLV

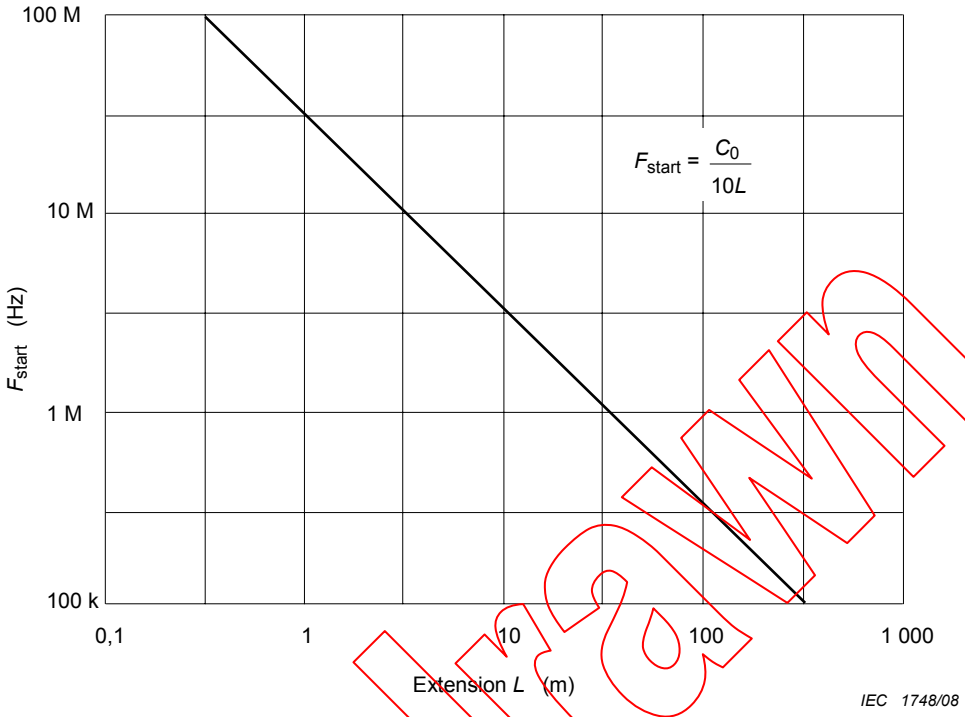

c_0 = 3×10^8 m/s

L = cable length + equipment size

Examples:

– For a cable connected to a keyboard (extended dimension ≥ λ/4) powered from a battery-operated personal computer, with a coiled cable having a length of 4 m, the start frequency should be 6,67 MHz. The keyboard should be covered by the artificial hand. For a mouse having just 2 m of cable, the start frequency would be 15 MHz, etc.

– A pocket calculator with an a.c./d.c. adapter option, should be tested on the mains side of the adapter from 150 kHz upwards. The pocket calculator should be covered by the artificial hand.

– A hand-held battery-supplied multimeter which can have connections to ground should be tested on its cables from 150 kHz upwards. The multimeter should be covered by the artificial hand.

– A double-insulated (mains) compact disc player which can be connected to an audio receiver, connected to insulated loudspeaker boxes, but also having an antenna input terminal which can be connected to ground should be tested on both mains supply and audio cable(s) from 150 kHz upwards.

– A burglar alarm having various insulated sensors distributed through a building, of which the maximum length of cable may extend 200 m (manufacturer's specification) should be tested on these cables from 150 kHz upwards.

Figure B.1 – Start frequency as function of cable length and equipment size

Withdrawn

Documents
Document Sharing Hub
Full document details: IEC 61000-4-6 2008 RLV

Annex C
(informative)

Guide for selecting test levels

The test levels should be selected in accordance with the electromagnetic radiation environment to which the EUT and cables may be exposed when finally installed. The consequences of failure should be borne in mind in selecting the test level to be used. A higher level should be considered if the consequences of failure are large.

If the EUT is to be installed at a few sites only, then inspection of the local RF sources enables a calculation of field strengths likely to be encountered. If the powers of the sources are not known it may be possible to measure the actual field strength at the location(s) concerned.

For equipment intended for operation in a variety of locations, the following guidelines may be followed in selecting the test level to be used.

The following classes are related to the levels listed in Clause 5; they are considered as general guidelines for the selection of the appropriate levels:

Class 1: Low-level electromagnetic radiation environment. Typical level where radio/ television stations are located at a distance of more than 1 km and typical level for low-power transceivers.

Class 2: Moderate electromagnetic radiation environment. Low-power portable transceivers (typically less than 1 W rating) are in use, but with restrictions on use in close proximity to the equipment. A typical commercial environment.

Class 3: Severe electromagnetic radiation environment. Portable transceivers (2 W and more) are in use relatively close to the equipment but at a distance not less than 1 m. High-powered broadcast transmitters are in close proximity to the equipment and ISM equipment may be located close by. A typical industrial environment.

Class X: X is an open level which may be negotiated and specified in the dedicated equipment specifications or equipment standards.

The test levels described are typical values which are rarely exceeded in the locations described. At some locations these values are exceeded, e.g. in the proximity of high-power transmitters or ISM equipment located in the same building. In such cases, it may be preferable to shield the room or building, and filter the signal and power wires to the equipment, rather than specifying all equipment to be immune to such levels.

Withdrawn

AVA Documents
Document Sharing Hub

Full document details: IEC 61000-4-6 2008 RLV

Annex D
(informative)

Information on coupling and decoupling networks

D.1 Basic features of the coupling and decoupling networks

The coupling and decoupling network should provide:

– coupling of the disturbing signal to the EUT;
– stable impedance, seen from the EUT, independent of the AE common-mode impedance;
– decoupling of the AE from the disturbing signal to prevent interference of the AE;
– transparency to the wanted signal.

The required parameters for the coupling and decoupling networks in the frequency range 150 kHz to 80 MHz are given in 6.2 and examples are given in D.2.

In the Figures D.1 to D.6, the common-mode impedance, Z_{ce}, is formed by the sum of the internal resistance of the test generator (50 Ω) and the parallel combination of the resistors from the conductors of the cable under test (100 Ω). See Figure 5c. With the use of a suitable inductor L ($|\omega L|$ >> 150 Ω), the decoupling elements, C_2, should not influence Z_{ce}.

The centre of the EUT port on the coupling and decoupling network should be located 30 mm above the ground reference plane. The cable between the coupling and decoupling network and the EUT can then represent a transmission-line with a characteristic impedance of about 150 Ω if located at 30 mm above the ground reference plane.

The impedance of capacitors C_1, providing DC- and LF-separation of the test generator and the individual wires of the coupling and decoupling network, should be much less than 150 Ω in the frequency range of interest.

The AE is decoupled by a common-mode inductor L, and by the capacitors C_2 for unscreened cables or by a common-mode inductor L only. For screened cables, the capacitors C_2 are not needed as the screen will be connected to the ground reference plane at the AE-side.

It is essential for unscreened cable that the value of C_2 is chosen such that the wanted signal is not unduly affected. It is not permissible for coupling and decoupling network parameters to be unduly affected by the wanted signal, e.g. in CDN-M1, saturation of the ferrite(s).

Warning: Since C_1 and C_2 bridge live parts in the mains coupling and decoupling networks, suitable Y-capacitors must be used. Due to the high leakage current, the CDN shall have an earth terminal which shall be connected to the ground reference plane under all test conditions, and the ground reference plane shall be appropriately connected to the protective earth.

D.2 Examples of coupling and decoupling networks

A number of possibilities are given in Figures D.1 to D.6 because it is impossible to cover all functional requirements with one coupling and decoupling network.

Withdrawn

AVA Documents Document Sharing Hub

Full document details: IEC 61000-4-6 2008 RLV

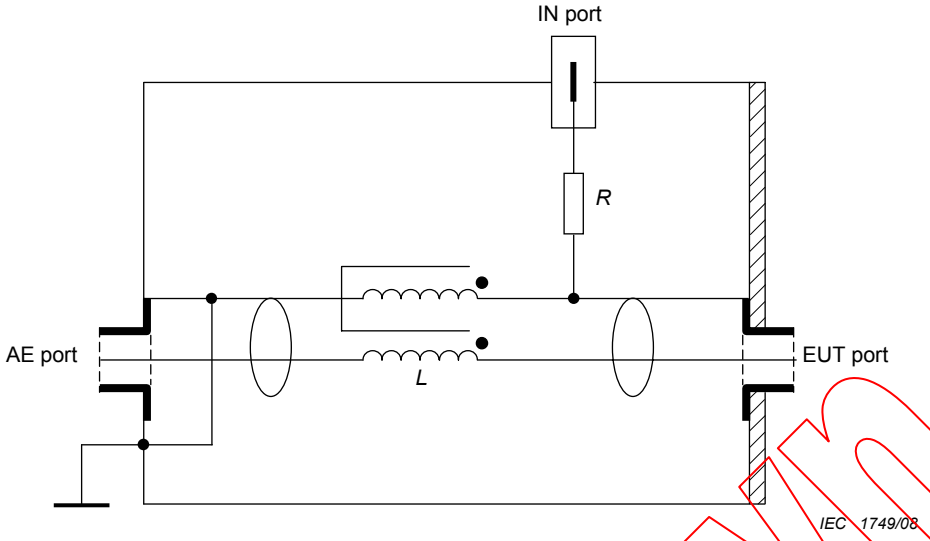

R = 100 Ω

$L \geq 280$ µH at 150 kHz

Figure D.1 – Example of a simplified diagram for the circuit of CDN-S1 used with screened cables (see 6.2.1)

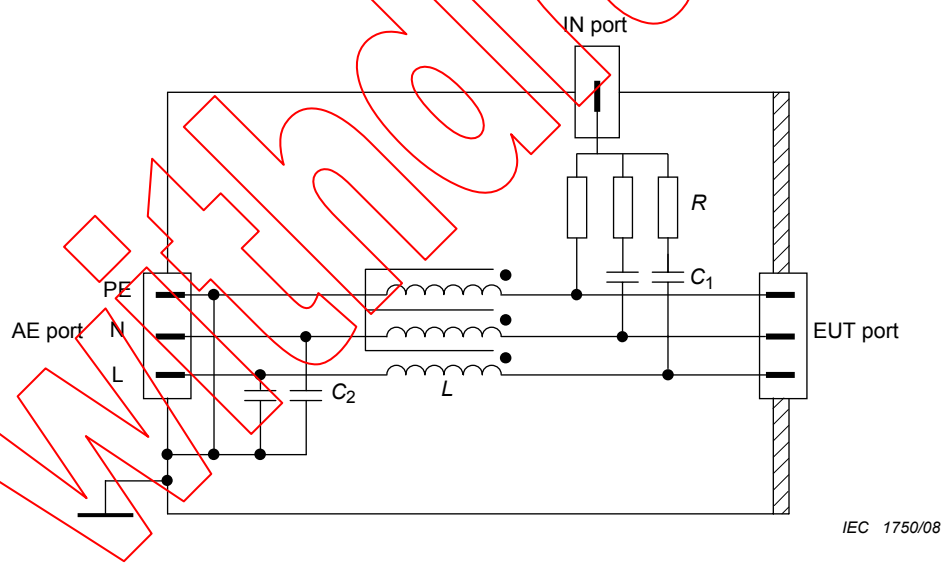

CDN-M3, C_1 (typ) = 10 nF, C_2 (typ) = 47 nF, R = 300 Ω, $L \geq 280$ µH at 150 kHz

CDN-M2, C_1 (typ) = 10 nF, C_2 (typ) = 47 nF, R = 200 Ω, $L \geq 280$ µH at 150 kHz

CDN-M1, C_1 (typ) = 22 nF, C_2 (typ) = 47 nF, R = 100 Ω, $L \geq 280$ µH at 150 kHz

Figure D.2 – Example of simplified diagram for the circuit of CDN-M1/-M2/-M3 used with unscreened supply (mains) lines (see 6.2.1.1)

Withdrawn

Documents
Document Sharing Hub
Full document details: IEC 61000-4-6 2008 RLV

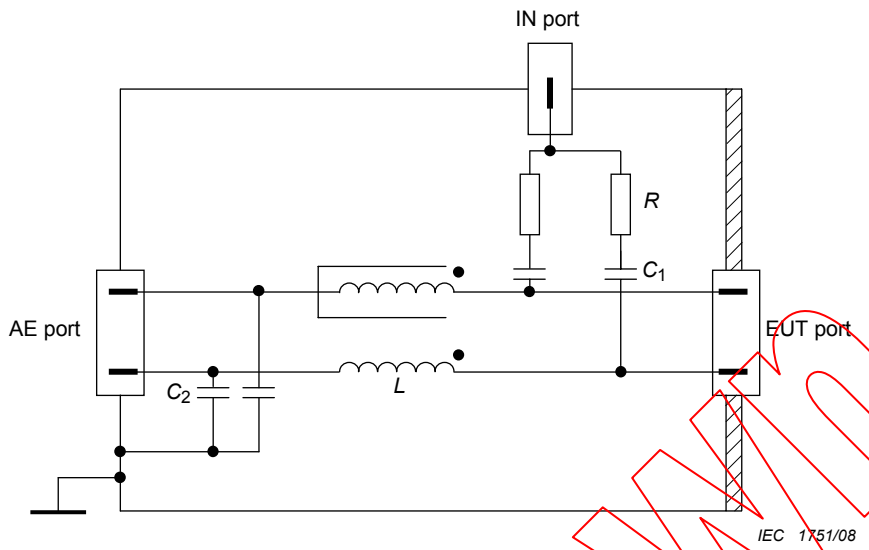

C_1 (typ) = 10 nF

C_2 (typ) = 47 nF

R = 200 Ω

L ≥ 280 µH at 150 kHz

Figure D.3 – Example of a simplified diagram for the circuit of CDN-AF2 used with unscreened non-balanced lines (see 6.2.1.3)

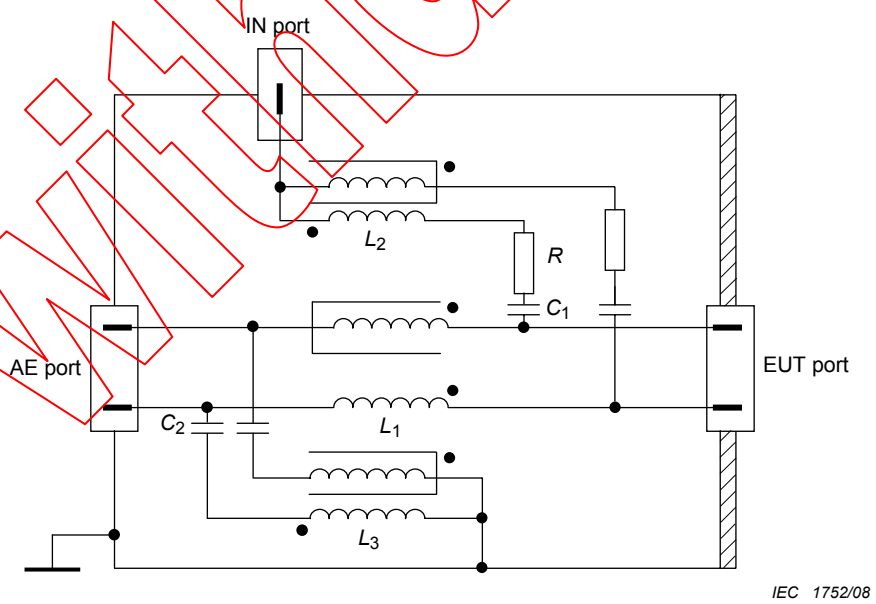

C_1 (typ) = 10 nF,

C_2 (typ) = 47 nF, R = 200 Ω

L_1 ≥ 280 µH at 150 kHz

L_2 = L_3 = 6 mH (when C_2 and L_3 are not used, L_1 ≥ 30 mH)

Figure D.4 – Example of a simplified diagram for the circuit of a CDN-T2, used with an unscreened balanced pair (see 6.2.1.2)

Withdrawn

Documents
Document Sharing Hub

Full document details: IEC 61000-4-6 2008 RLV

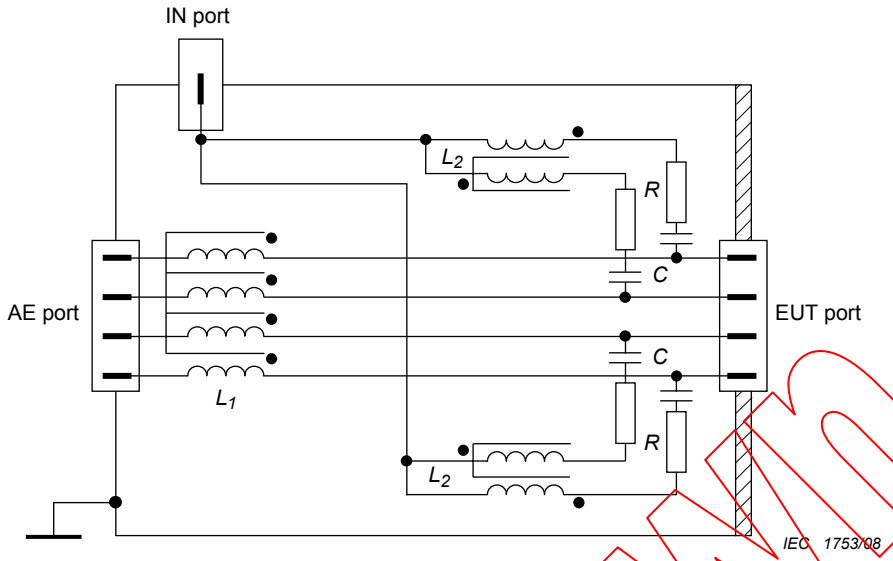

C (typ) = 5,6 nF

R = 400 Ω

L_1 >> 280 µH at 150 kHz

L_2 = 6 mH

Figure D.5 – Example of a simplified diagram of the circuit of a CDN-T4 used with unscreened balanced pairs (see 6.2.1.2)

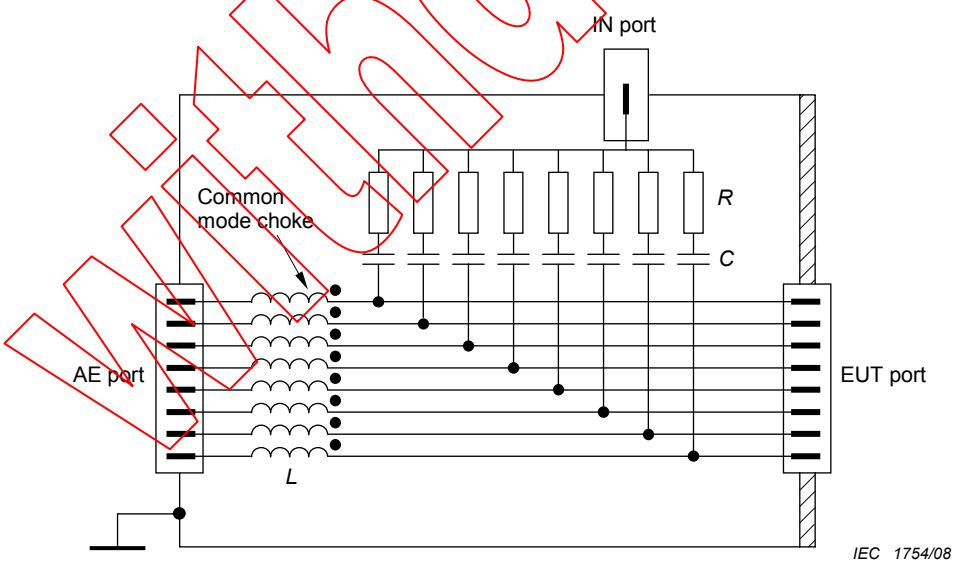

C (typ) = 2,2 nF

R = 800 Ω

L >> 280 µH at 150 kHz

Figure D.6 – Example of a simplified diagram of the circuit of a CDN-T8 used with unscreened balanced pairs (see 6.2.1.2)

Withdrawn

Documents
Document Sharing Hub
Full document details: IEC 61000-4-6 2008 RLV

Annex E
(informative)

Information for the test generator specification

The available output power of the power amplifier PA (Figure 3), is determined by taking into account the attenuator T_2 (6 dB), the amplitude modulation depth (80 %) (see Figure 4), and the minimum coupling factor of the CDN or clamp used.

Table E.1 – Required power amplifier output power to obtain a test level of 10 V

Injection device	Minimum coupling factor ± 1,5 dB dB	Required power at output of PA W
CDN	0	7
Current clamp winding	–14	176
ratio 5:1		
EM clamp	–6	28
NOTE The coupling factor is defined in 3.5. It can be measured by using the output level setting circuit see Figure 8c. The coupling factor is the ratio between the output voltage U_{mr}, obtained when using a coupling and decoupling device in series with a 150 Ω to 50 Ω adapter and the output voltage when using two 150 Ω to 50 Ω adapters in series		

Withdrawn

Documents
Document Sharing Hub
Full document details: IEC 61000-4-6 2008 RLV

Annex F
(informative)

Test set-up for large EUTs

F.0 Introduction

The test set-up as described in the main body of the standard (see Clause 7) is not fully sufficient to cover the needs of some large EUTs with cables entering or exiting the EUT at heights greater than 1 m. As the upper frequency of the test signal is 80 MHz, EUT size may be considerable compared to the wavelength, and resonance effects may be present with cables that are connected to such EUTs.

In this case, this annex provides an alternative test method applicable to large EUTs that places the coupling device near to the cable entry, resulting in a small loop area with reduced resonance effects.

Examples of large EUTs to which this annex may apply include, but are not limited to, the following.

– rack-mounted telecommunication switching systems;
– electrical machinery;
– rack-mounted switch and control gear.

F.1 Test set-up for large EUTs

Examples of the test set-up for large EUTs are given in Figures F.1 and F.2.

The elevated ground reference plane shown in Figure F.1 is the reference ground plane for this test set-up. The purpose of the elevated ground reference plane is to reduce the length of cable between the EUT and CDN, thereby controlling or reducing the effects of resonances in the cables.

The size of the elevated ground reference plane shall be large enough to extend a minimum of 0,2 m beyond all CDNs used in the test. The length of cable under test between the EUT and CDN shall be a maximum 0,3 m.

The elevated ground reference plane shall be placed at a height above the main ground plane so that to allow cables from the EUT to pass to the CDNs in a horizontal alignment.

The elevated ground reference plane shall be electrically connected to earth for safety reasons. This connection is not significant from an RF point of view.

NOTE 1 Attention should be taken with the physical construction of the elevated ground reference plane and its support structure to ensure a mechanically safe condition.

The equipment to be tested should be placed on an insulating support of 0,1 m height above the ground plane. In case the equipment is delivered on a transport pallet, and if due to its excessive weight or size it cannot be safely removed from its transport pallet, then the EUT may be left on its pallet for testing even if its height exceeds 0,1 m. In case the equipment, because of size or weight, cannot be elevated 0,1 m, thinner insulation may be used provided the EUT is electrically isolated from the ground plane. Any variation from the standard method of testing shall be recorded in the test report.

The AE may be located on the elevated ground reference plane but does not need to be located on it provided the AE is connected to the EUT via a CDN. When direct injection is used, the AE may be located off of the elevated ground reference plane provided proper decoupling

Withdrawn

AVA Documents Document Sharing Hub

Full document details: IEC 61000-4-6 2008 RLV