IEC 61000-4-8

Edition 2.0 2009-09

INTERNATIONAL STANDARD

NORME INTERNATIONALE

BASIC EMC PUBLICATION

PUBLICATION FONDAMENTALE EN CEM

Electromagnetic compatibility (EMC) – Part 4-8: Testing and measurement techniques – Power frequency magnetic field immunity test

Compatibilité électromagnétique (CEM) – Partie 4-8: Techniques d'essai et de mesure – Essai d'immunité au champ magnétique à la fréquence du réseau

IEC 61000-4-8:2009

Documents
Document Sharing Hub

Full document details: IEC 61000-4-8 2009

THIS PUBLICATION IS COPYRIGHT PROTECTED

Copyright © 2009 IEC, Geneva, Switzerland

All rights reserved. Unless otherwise specified, no part of this publication may be reproduced or utilized in any form or by any means, electronic or mechanical, including photocopying and microfilm, without permission in writing from either IEC or IEC's member National Committee in the country of the requester.
If you have any questions about IEC copyright or have an enquiry about obtaining additional rights to this publication, please contact the address below or your local IEC member National Committee for further information.

Droits de reproduction réservés. Sauf indication contraire, aucune partie de cette publication ne peut être reproduite ni utilisée sous quelque forme que ce soit et par aucun procédé, électronique ou mécanique, y compris la photocopie et les microfilms, sans l'accord écrit de la CEI ou du Comité national de la CEI du pays du demandeur.
Si vous avez des questions sur le copyright de la CEI ou si vous désirez obtenir des droits supplémentaires sur cette publication, utilisez les coordonnées ci-après ou contactez le Comité national de la CEI de votre pays de résidence.

IEC Central Office
3, rue de Varembé
CH-1211 Geneva 20
Switzerland
Email: inmail@iec.ch
Web: www.iec.ch

About the IEC

The International Electrotechnical Commission (IEC) is the leading global organization that prepares and publishes International Standards for all electrical, electronic and related technologies.

About IEC publications

The technical content of IEC publications is kept under constant review by the IEC. Please make sure that you have the latest edition, a corrigenda or an amendment might have been published.

- Catalogue of IEC publications: www.iec.ch/searchpub
The IEC on-line Catalogue enables you to search by a variety of criteria (reference number, text, technical committee,…). It also gives information on projects, withdrawn and replaced publications.
- IEC Just Published: www.iec.ch/online_news/justpub
Stay up to date on all new IEC publications. Just Published details twice a month all new publications released. Available on-line and also by email.
- Electropedia: www.electropedia.org
The world's leading online dictionary of electronic and electrical terms containing more than 20 000 terms and definitions in English and French, with equivalent terms in additional languages. Also known as the International Electrotechnical Vocabulary online.
- Customer Service Centre: www.iec.ch/webstore/custserv
If you wish to give us your feedback on this publication or need further assistance, please visit the Customer Service Centre FAQ or contact us:
Email: csc@iec.ch
Tel.: +41 22 919 02 11
Fax: +41 22 919 03 00

A propos de la CEI

La Commission Electrotechnique Internationale (CEI) est la première organisation mondiale qui élabore et publie des normes internationales pour tout ce qui a trait à l'électricité, à l'électronique et aux technologies apparentées.

A propos des publications CEI

Le contenu technique des publications de la CEI est constamment revu. Veuillez vous assurer que vous possédez l'édition la plus récente, un corrigendum ou amendement peut avoir été publié.

- Catalogue des publications de la CEI: www.iec.ch/searchpub/cur_fut-f.htm
Le Catalogue en-ligne de la CEI vous permet d'effectuer des recherches en utilisant différents critères (numéro de référence, texte, comité d'études,…). Il donne aussi des informations sur les projets et les publications retirées ou remplacées.
- Just Published CEI: www.iec.ch/online_news/justpub
Restez informé sur les nouvelles publications de la CEI. Just Published détaille deux fois par mois les nouvelles publications parues. Disponible en-ligne et aussi par email.
- Electropedia: www.electropedia.org
Le premier dictionnaire en ligne au monde de termes électroniques et électriques. Il contient plus de 20 000 termes et définitions en anglais et en français, ainsi que les termes équivalents dans les langues additionnelles. Egalement appelé Vocabulaire Electrotechnique International en ligne.
- Service Clients: www.iec.ch/webstore/custserv/custserv_entry-f.htm
Si vous désirez nous donner des commentaires sur cette publication ou si vous avez des questions, visitez le FAQ du Service clients ou contactez-nous:
Email: csc@iec.ch
Tél.: +41 22 919 02 11
Fax: +41 22 919 03 00

Documents
Document Sharing Hub

Full document details: IEC 61000-4-8 2009

IEC 61000-4-8

Edition 2.0 2009-09

INTERNATIONAL STANDARD

NORME INTERNATIONALE

BASIC EMC PUBLICATION

PUBLICATION FONDAMENTALE EN CEM

Electromagnetic compatibility (EMC) – Part 4-8: Testing and measurement techniques – Power frequency magnetic field immunity test

Compatibilité électromagnétique (CEM) – Partie 4-8: Techniques d'essai et de mesure – Essai d'immunité au champ magnétique à la fréquence du réseau

INTERNATIONAL ELECTROTECHNICAL COMMISSION

COMMISSION ELECTROTECHNIQUE INTERNATIONALE

PRICE CODE
CODE PRIX

V

ICS 33.100.20

ISBN 978-2-88910-378-2

® Registered trademark of the International Electrotechnical Commission
Marque déposée de la Commission Electrotechnique Internationale

Documents
Document Sharing Hub

Full document details: IEC 61000-4-8 2009

CONTENTS

FOREWORD 4
INTRODUCTION 6
1 Scope 7
2 Normative references 7
3 Terms and definitions 7
4 General 8
5 Test levels 9
6 Test equipment 10
6.1 General 10
6.2 Test generator 10
6.2.1 Current source 10
6.2.2 Characteristics and performances of the test generator for different inductive coils 10
6.2.3 Verification of the characteristics of the test generator 11
6.3 Inductive coil 12
6.3.1 Field distribution 12
6.3.2 Characteristics of the inductive standard coils 1 m × 1 m and 1 m × 2,6 m 12
6.3.3 Characteristics of the inductive coils for table top and floor standing equipment 12
6.3.4 Measurement of the inductive coil factor 13
6.4 Test and auxiliary instrumentation 13
6.4.1 Test instrumentation 13
6.4.2 Auxiliary instrumentation 14
7 Test set-up 14
7.1 Test set-up components 14
7.2 Ground (reference) plane for floor standing equipment 14
7.3 Equipment under test 14
7.4 Test generator 15
7.5 Inductive coil 15
8 Test procedure 15
8.1 General 15
8.2 Laboratory reference conditions 15
8.2.1 General 15
8.2.2 Climatic conditions 15
8.2.3 Electromagnetic conditions 16
8.3 Carrying out the test 16
9 Evaluation of the test results 17
10 Test report 17
Annex A (normative) Inductive coil calibration method 22
Annex B (normative) Characteristics of the inductive coils 23
Annex C (informative) Selection of the test levels 29
Annex D (informative) Information on power frequency magnetic field strength 31
Bibliography 33

Documents
Document Sharing Hub
Full document details: IEC 61000-4-8 2009

Figure 1 – Example of application of the test field by the immersion method 18
Figure 2 – Example of schematic circuit of the test generator for power frequency magnetic field 18
Figure 3 – Example of test set-up for table-top equipment 19
Figure 4 – Calibration of the standard coils 19
Figure 5 – Example of test set-up for floor-standing equipment 20
Figure 6 – Example of investigation of susceptibility to magnetic field by the proximity method with the 1 m × 1 m inductive coil 20
Figure 7 – Illustration of Helmholtz coils 21
Figure B.1 – Characteristics of the field generated by a square inductive coil (1 m side) in its plane 25
Figure B.2 – 3 dB area of the field generated by a square inductive coil (1 m side) in its plane 25
Figure B.3 – 3 dB area of the field generated by a square inductive coil (1 m side) in the mean orthogonal plane (component orthogonal to the plane of the coil) 26
Figure B.4 – 3 dB area of the field generated by two square inductive coils (1 m side) 0,6 m spaced, in the mean orthogonal plane (component orthogonal to the plane of the coils) 26
Figure B.5 – 3 dB area of the field generated by two square inductive coils (1 m side) 0,8 m spaced, in the mean orthogonal plane (component orthogonal to the plane of the coils) 27
Figure B.6 – 3 dB area of the field generated by a rectangular inductive coil (1 m × 2,6 m) in its plane 27
Figure B.7 – 3 dB area of the field generated by a rectangular inductive coil (1 m × 2,6 m) in its plane (ground plane as a side of the inductive coil) 28
Figure B.8 – 3 dB area of the field generated by a rectangular inductive coil (1 m × 2,6 m) with ground plane, in the mean orthogonal plane (component orthogonal to the plane of the coil) 28

Table 1 – Test levels for continuous field 9
Table 2 – Test levels for short duration: 1 s to 3 s 10
Table 3 – Specification of the generator for different inductive coils 11
Table 4 – Verification parameter for the different inductive coils 11
Table D.1 – Values of the maximum magnetic field produced by household appliances (results of the measurements of 100 different devices of 25 basic types) 31
Table D.2 – Values of the magnetic field generated by a 400 kV line 31
Table D.3 – Values of the magnetic field in high voltage sub-station areas 32
Table D.4 – Values of the magnetic field in power plants 32

Documents
Document Sharing Hub
Full document details: IEC 61000-4-8 2009

INTERNATIONAL ELECTROTECHNICAL COMMISSION

ELECTROMAGNETIC COMPATIBILITY (EMC) –

Part 4-8: Testing and measurement techniques – Power frequency magnetic field immunity test

FOREWORD

1) The International Electrotechnical Commission (IEC) is a worldwide organization for standardization comprising all national electrotechnical committees (IEC National Committees). The object of IEC is to promote international co-operation on all questions concerning standardization in the electrical and electronic fields. To this end and in addition to other activities, IEC publishes International Standards, Technical Specifications, Technical Reports, Publicly Available Specifications (PAS) and Guides (hereafter referred to as "IEC Publication(s)"). Their preparation is entrusted to technical committees; any IEC National Committee interested in the subject dealt with may participate in this preparatory work. International, governmental and non-governmental organizations liaising with the IEC also participate in this preparation. IEC collaborates closely with the International Organization for Standardization (ISO) in accordance with conditions determined by agreement between the two organizations.
2) The formal decisions or agreements of IEC on technical matters express, as nearly as possible, an international consensus of opinion on the relevant subjects since each technical committee has representation from all interested IEC National Committees.
3) IEC Publications have the form of recommendations for international use and are accepted by IEC National Committees in that sense. While all reasonable efforts are made to ensure that the technical content of IEC Publications is accurate, IEC cannot be held responsible for the way in which they are used or for any misinterpretation by any end user.
4) In order to promote international uniformity, IEC National Committees undertake to apply IEC Publications transparently to the maximum extent possible in their national and regional publications. Any divergence between any IEC Publication and the corresponding national or regional publication shall be clearly indicated in the latter.
5) IEC provides no marking procedure to indicate its approval and cannot be rendered responsible for any equipment declared to be in conformity with an IEC Publication.
6) All users should ensure that they have the latest edition of this publication.
7) No liability shall attach to IEC or its directors, employees, servants or agents including individual experts and members of its technical committees and IEC National Committees for any personal injury, property damage or other damage of any nature whatsoever, whether direct or indirect, or for costs (including legal fees) and expenses arising out of the publication, use of, or reliance upon, this IEC Publication or any other IEC Publications.
8) Attention is drawn to the Normative references cited in this publication. Use of the referenced publications is indispensable for the correct application of this publication.
9) Attention is drawn to the possibility that some of the elements of this IEC Publication may be the subject of patent rights. IEC shall not be held responsible for identifying any or all such patent rights.

International Standard IEC 61000-4-8 has been prepared by subcommittee 77A: Low frequency phenomena, of IEC technical committee 77: Electromagnetic compatibility.

This second edition cancels and replaces the first edition published in 1993 and its Amendment 1 (2000). It forms a technical revision.

This edition includes the following significant technical changes with respect to the previous edition: the scope is extended in order to cover 60 Hz. Characteristics, performance and verification of the test generator and related inductive coils are revised. Modifications are also introduced in the test set-up (GRP) and test procedure.

It forms Part 4-8 of the IEC 61000 series of standards. It has the status of a basic EMC publication in accordance with IEC Guide 107.

Documents
Document Sharing Hub

Full document details: IEC 61000-4-8 2009

The text of this standard is based on the following documents:

FDIS	Report on voting
77A/694/FDIS	77A/706/RVD

Full information on the voting for the approval of this standard can be found in the report on voting indicated in the above table.

This publication has been drafted in accordance with the ISO/IEC Directives, Part 2.

A list of all parts of the IEC 61000 series, under the general title *Electromagnetic compatibility*, can be found on the IEC website.

The committee has decided that the contents of this publication will remain unchanged until the maintenance result date indicated on the IEC web site under "http://webstore.iec.ch" in the data related to the specific publication. At this date, the publication will be

- reconfirmed,
- withdrawn,
- replaced by a revised edition, or
- amended.

Documents
Document Sharing Hub

Full document details: IEC 61000-4-8 2009

INTRODUCTION

This standard is part of the IEC 61000 series of standards, according to the following structure:

Part 1: General

General considerations (introduction, fundamental principles)

Definitions, terminology

Part 2: Environment

Description of the environment

Classification of the environment

Compatibility levels

Part 3: Limits

Emission limits

Immunity limits (in so far as they do not fall under the responsibility of the product committees)

Part 4: Testing and measurement techniques

Measurement techniques

Testing techniques

Part 5: Installation and mitigation guidelines

Installation guidelines

Mitigation methods and devices

Part 9: Miscellaneous

Each part is further subdivided into several parts, published either as international standards, as technical specifications or technical reports, some of which have already been published as sections. Others will be published with the part number followed by a dash and a second number identifying the subdivision (example: IEC 61000-6-1).

This part is an international standard which gives immunity requirements and test procedures related to "power frequency magnetic field".

Documents
Document Sharing Hub

Full document details: IEC 61000-4-8 2009

ELECTROMAGNETIC COMPATIBILITY (EMC) –

Part 4-8: Testing and measurement techniques – Power frequency magnetic field immunity test

1 Scope

This part of IEC 61000 relates to the immunity requirements of equipment, only under operational conditions, to magnetic disturbances at power frequencies 50 Hz and 60 Hz related to:

– residential and commercial locations;
– industrial installations and power plants;
– medium voltage and high voltage sub-stations.

The applicability of this standard to equipment installed in different locations is determined by the presence of the phenomenon, as specified in Clause 4. This standard does not consider disturbances due to capacitive or inductive coupling in cables or other parts of the field installation.

Other IEC standards dealing with conducted disturbances cover these aspects.

The object of this standard is to establish a common and reproducible basis for evaluating the performance of electrical and electronic equipment for household, commercial and industrial applications when subjected to magnetic fields at power frequency *(continuous and short duration field).*

The standard defines:

– recommended test levels;
– test equipment;
– test set-up;
– test procedure.

2 Normative references

The following referenced documents are indispensable for the application of this document. For dated references, only the edition cited applies. For undated references, the latest edition of the referenced document (including any amendments) applies.

IEC 60050(161), *International Electrotechnical Vocabulary (IEV) – Chapter 161: Electromagnetic compatibility*

3 Terms and definitions

For the purposes of this document the following terms and definitions apply to the restricted field of magnetic disturbances as well as the terms and definitions from IEC 60050(161) [IEV].

3.1
current distortion factor
ratio of the root-mean square value of the harmonics content of an alternating current to the root-mean square value of the fundamental current

AVA Documents
Document Sharing Hub

3.2
EUT
equipment under test

3.3
inductive coil
conductor loop of defined shape and dimensions, in which flows a current, generating a magnetic field of defined constancy in its plane and in the enclosed volume

3.4
inductive coil factor
ratio between the magnetic field strength generated by an inductive coil of given dimensions and the corresponding current value; the field is that measured at the centre of the coil plane, without the EUT

3.5
immersion method
method of application of the magnetic field to the EUT, which is placed in the centre of an inductive coil (see Figure 1)

3.6
proximity method
method of application of the magnetic field to the EUT, where a small inductive coil is moved along the side of the EUT in order to detect particularly sensitive areas

3.7
ground (reference) plane
GRP
flat conductive surface whose potential is used as a common reference for the magnetic field generator and the auxiliary equipment (the ground plane can be used to close the loop of the inductive coil, as in Figure 5)

[IEV 161-04-36, modified]

3.8
decoupling network, back filter
electrical circuit intended to avoid reciprocal influence with other equipment not submitted to the magnetic field immunity test

4 General

The magnetic fields to which equipment is subjected may influence the reliable operation of equipment and systems.

The following tests are intended to demonstrate the immunity of equipment when subjected to power frequency magnetic fields related to the specific location and installation condition of the equipment (e.g. proximity of equipment to the disturbance source).

The power frequency magnetic field is generated by power frequency current in conductors or, more seldom, from other devices (e.g. leakage of transformers) in the proximity of equipment.

As for the influence of nearby conductors, one should differentiate between:

– the current under normal operating conditions, which produces a steady magnetic field, with a comparatively small magnitude;

Documents
Document Sharing Hub

Full document details: IEC 61000-4-8 2009

– the current under fault conditions which can produce comparatively high magnetic fields but of short duration, until the protection devices operate (a few milliseconds with fuses, a few seconds for protection relays).

The test with a steady magnetic field may apply to all types of equipment intended for public or industrial low voltage distribution networks or for electrical plants.

The test with a short duration magnetic field related to fault conditions, requires test levels that differ from those for steady-state conditions; the highest values apply mainly to equipment to be installed in exposed places of electrical plants.

The test field waveform is that of power frequency.

In many cases (household areas, sub-stations and power plant under normal conditions), the magnetic field produced by harmonics is negligible.

5 Test levels

The preferential range of test levels, respectively for continuous and short duration application of the magnetic field, applicable to distribution networks at 50 Hz and 60 Hz, is given in Table 1 and Table 2.

The magnetic field strength is expressed in A/m; 1 A/m corresponds to a free space magnetic flux density of 1,26 μT.

Table 1 – Test levels for continuous field

Level	Magnetic field strength A/m
1	1
2	3
3	10
4	30
5	100
x[a]	special
[a] "*x*" can be any level, above, below or in-between the other levels. This level can be given in the product specification.	

Documents
Document Sharing Hub
Full document details: IEC 61000-4-8 2009

Table 2 – Test levels for short duration: 1 s to 3 s

Level	Magnetic field strength A/m
1	n.a.[b]
2	n.a.[b]
3	n.a.[b]
4	300
5	1 000
x[a]	special
[a] "*x*" can be any level, above, below or in-between the other levels. This level, as well the duration of the test, can be given in the product specification. [b] "n.a." = not applicable.	

Information on the selection of the test levels is given in Annex C.

Information on actual levels is given in Annex D.

6 Test equipment

6.1 General

The test magnetic field is obtained by a current flowing in an inductive coil; the application of the test field to the EUT is by the *immersion method.*

An example of application of the immersion method is given in Figure 1.

The test equipment includes the current source (test generator), the inductive coil and auxiliary test instrumentation, that are also given in Figure 3.

6.2 Test generator

6.2.1 Current source

The current source typically consists of a voltage regulator (connected to the mains distribution network, or other sources), a current transformer and a circuit for the control of short duration application. The generator shall be able to operate in continuous mode or short duration mode.

The connection between the current transformer and the inductive coil input should be as short as possible to avoid that the currents which flow in the connection produce magnetic fields that affect the magnetic field in the test volume. Preferably the cables should be twisted together.

The characteristics and performances of the current source or test generator for the different fields and for different inductive coils considered in this standard, are given in 6.2.2.

6.2.2 Characteristics and performances of the test generator for different inductive coils

Table 3 specifies characteristics and performances of the test generator for different inductive coils.

Documents
Document Sharing Hub

Full document details: IEC 61000-4-8 2009

Table 3 – Specification of the generator for different inductive coils

	With standard square coil 1 m × 1 m 1 turn	**With standard rectangular coil 1 m × 2,6 m 1 turn**	**With other inductive coils**
Output current range for continuous operation	1 A up to 120 A	1 A up to 160 A	As necessary to achieve required field strength in Table 4
Output current range for short duration	320 A up to 1 200 A	500 A up to 1 600 A	As necessary to achieve required field strength in Table 4
Current/Magnetic field waveform	Sinusoidal	Sinusoidal	Sinusoidal
Current distortion factor	≤8 %	≤8 %	≤8 %
Continuous mode	Up to 8 h	Up to 8 h	Up to 8 h
Short time operation	1s up to 3 s	1s up to 3 s	1 s up to 3 s
Transformer output	Floating not connected to PE	Floating not connected to PE	Floating not connected to PE

The schematic circuit of the generator is given in Figure 2.

6.2.3 Verification of the characteristics of the test generator

In order to compare the results for different test generators, the essential characteristics of the current parameters in the standard inductive coils shall be verified.

The characteristics to be verified are:

– current value in the standard inductive coils;

– field strength in all other inductive coils;

– total distortion factor in the inductive coils.

For standard inductive coils the verifications shall be carried out with a current probe and measurement instrumentation having better than ±2 % accuracy. Figure 4 shows the verification set-up.

For all other inductive coils the verification should be carried out with field strength meter, having an <±1dB accuracy.

Table 4 – Verification parameter for the different inductive coils

Table 1 Level	**Current values for the 1 m × 1 m standard coil** A	**Current values for the 1 m × 2,6 m standard coil** A	**Field strength in the centre for all other inductive coils** A/m
1	1,15	1,51	1
2	3,45	4,54	3
3	11,5	15,15	10
4	34,48	45,45	30
5	114,95	151,5	100

Documents
Document Sharing Hub

Full document details: IEC 61000-4-8 2009

6.3 Inductive coil

6.3.1 Field distribution

For the two 1 turn standard coils 1 m × 1 m and 1 m × 2,6 m, the field distribution is known and shown in Annex B. Therefore, no field verification or field calibration is necessary, the current measurement as shown in Figure 4 is sufficient.

Other coils such as multi-turn coils may be used in order to have a lower testing current, or for EUT not fitting into the two standard coils, inductive coils of different dimensions may be used. For these cases, the field distribution (maximum variation of ±3 dB) shall be verified.

6.3.2 Characteristics of the inductive standard coils 1 m × 1 m and 1 m × 2,6 m

The inductance for the 1 turn standard 1 m × 1 m coil is approximately 2,5 μH, for the 1 m × 2,6 m standard coil approximately 6 μH.

The inductive coil shall be made of copper, aluminium or any conductive non-magnetic material, of such cross-section and mechanical arrangement as to facilitate its stable positioning during the tests. For continuous tests up to 100 A/m the cross section of aluminium should be 1,5 cm^2 and for short time test up to 1 000 A/m the cross section should be 4 cm^2.

The tolerance of the standard coils is ±1 cm, measured between the centre lines (centre of the cross section). The characteristics of inductive coils with respect to the magnetic field distribution are given in Annex B.

6.3.3 Characteristics of the inductive coils for table top and floor standing equipment

The list below gives the testing requirements for table top and floor standing equipment.

a) Inductive coil for table-top equipment

   The inductive coil of standard dimensions for testing small equipment (e.g. computer monitors, watt-hour meters, transmitters for process control, etc.) has a square form with 1 m side. The test volume of the standard square coil is 0,6 m × 0,6 m × 0,5 m (height).

   Any other coils can be used to obtain a field homogeneity better than 3 dB.

   For example, a double coil of standard size (Helmholtz coil) could be used in order to obtain a field homogeneity better than 3 dB or for testing larger EUTs.

   The double coil (Helmholtz coil) shall be comprised of two or more series of turns, properly spaced (see Figure 7, Figure B.4, Figure B.5).

   The test volume of a double standard size coil, 0,8 m spaced, for a 3 dB homogeneity is 0,6 m × 0,6 m × 1 m (height).

   For example, the Helmholtz coils, for a 0,2 dB inhomogeneity, have dimensions and separation distances as given in Figure 7.

   No GRP is permitted as part of the coil nor on the insulating table below the EUT (see Figure 3).

b) Inductive coil for floor-standing equipment

   The inductive coil of standard dimensions for testing floor standing equipment (e.g. racks, etc.) has a square form with 1 m side and 2,6 m height.

   The test volume of the standard square coil is 0,6 m × 2 m (height) × 0,6 m.

   When an EUT does not fit into the standard inductive coil 1 m × 2,6 m, the product committee should select the test method: either the proximity method with the standard 1 m × 1 m 1 turn inductive coil (Figure 6 is an example) or inductive coils shall be made

AVA Documents
Document Sharing Hub
Full document details: IEC 61000-4-8 2009

according to the dimensions of the EUT and the different field orientation of the magnetic field.

Note that larger inductive coils give comparable results, but it may be not practicable to construct very large coils. In this case the proximity method may give useful but not necessarily reproducible results.

A GRP shall be present as in Figure 5.

NOTE Due to the possible large dimensions of EUTs, the coils may be made of "C" or "T" sections in order to have sufficient mechanical rigidity.

6.3.4 Measurement of the inductive coil factor

In order to make it possible to compare the test results from different test equipment, the inductive coil factor shall be measured without the EUT, in free space condition.

For the two 1 turn standard coils 1 m × 1 m and 1 m × 2,6 m, the field distribution is known and shown in Annex B. Therefore, neither field verification nor field calibration is necessary, the current measurement, as shown in Figure 4, is sufficient.

For all other inductive coils the following procedure shall be carried out. An inductive coil of the correct dimensions for the EUT dimensions, shall be positioned at 1 m minimum distance from the wall of the laboratory and any magnetic material, by using insulating supports, and the inductive coil shall be connected to the test generator as prescribed in 6.2.

An appropriate magnetic field sensor shall be used to verify the magnetic field strength generated by the inductive coil.

The field sensor shall be positioned at the centre of the inductive coil (without the EUT) and with suitable orientation to detect the maximum value of the field.

The current in the inductive coil shall be adjusted to obtain the field strength specified by the test level.

The measurement shall be carried out at power frequency.

The measurement procedure shall be carried out with the test generator and inductive coil.

The coil factor is determined (and verified) by the above procedure.

The coil factor gives the current value to be injected in the coil to obtain the required test magnetic field (H/I) in the centre of the inductive coil.

Information on the measurement of the test magnetic field is given in Annex A.

6.4 Test and auxiliary instrumentation

6.4.1 Test instrumentation

The test instrumentation includes the current measuring system (sensors and instrument) for setting and measuring the current injected in the inductive coil.

NOTE The termination networks, back filters, etc. on power supply, control and signal lines that is part of the test set-up for other tests may be maintained.

The current measuring system is a calibrated current, measuring instrument, probe or shunt.

The accuracy of the measurement instrumentation shall be ±2 %.

Documents
Document Sharing Hub

Full document details: IEC 61000-4-8 2009

6.4.2 Auxiliary instrumentation

The auxiliary instrumentation comprises a simulator and any other instrument necessary for the operation and verification of the EUT functional specifications.

7 Test set-up

7.1 Test set-up components

The test set-up comprises the following components:

– equipment under test (EUT);
– inductive coil;
– test generator;
– GRP for floor standing equipment.

Precautions shall be taken if the test magnetic field may interfere with the test instrumentation and other sensitive equipment in the vicinity of the test set-up.

Examples of test set-ups are given in the following figures:

Figure 3: example of test set-up for table-top equipment;

Figure 5: example of test set-up for floor-standing equipment.

7.2 Ground (reference) plane for floor standing equipment

The ground plane (GRP) shall be placed in the laboratory; the floor standing EUT and auxiliary test equipment shall be placed on it and connected to GRP or to earth terminal.

The ground plane shall be a non-magnetic metal sheet (copper or aluminium) of 0,25 mm minimum thickness; other metals may be used but in this case they shall have at least 0,65 mm minimum thickness.

The minimum size of the ground plane is 1 m × 1 m.

The final size depends on the dimensions of the floor standing EUT.

The ground plane shall be connected to the safety earth system of the laboratory.

7.3 Equipment under test

The equipment is configured and connected to satisfy its functional requirements. Floor standing equipment shall be placed on the GRP with the interposition of a 0,1 m thickness insulating support (e.g. dry wood). For table top equipment see Figure 3.

The equipment cabinets which can be earthed shall be connected to the safety earth directly on the GRP or via the earth terminal to PE.

The power supply, input and output circuits shall be connected to the sources of power supply, control and signal.

The cables supplied or recommended by the equipment manufacturer shall be used. In absence of any recommendation, unshielded cables shall be adopted, of a type appropriate for the signals involved. All cables shall be exposed to the magnetic field for 1 m of their length.

Documents
Document Sharing Hub

Full document details: IEC 61000-4-8 2009

The back filters, if any, shall be inserted in the circuits at 1 m cable length from the EUT and connected to the ground plane.

The communication lines (data lines) shall be connected to the EUT by the cables given in the technical specification or standard for this application.

7.4 Test generator

The test generator shall not influence the magnetic field and therefore shall not be placed close to the inductive coil.

7.5 Inductive coil

The inductive coil, of the type specified in 6.3.2, shall enclose the EUT. The EUT shall be positioned inside the 3 dB test volume of the inductive coil.

Different inductive coils may be selected for testing in the different orthogonal directions, according to the general criteria specified in 6.3.3 a) and in 6.3.3 b).

The inductive coil shall be connected to the test generator in the same way as for the procedure specified in 6.3.4.

The inductive coil selected for the tests shall be specified in the test plan.

8 Test procedure

8.1 General

The test procedure shall include:

– verification of the laboratory reference conditions;
– preliminary verification of the correct operation of the equipment;
– carrying out the test;
– evaluation of the test results.

8.2 Laboratory reference conditions

8.2.1 General

In order to minimize the effect of environmental parameters on the test results, the test shall be carried out in climatic and electromagnetic reference conditions as specified in 8.2.2. and 8.2.3.

8.2.2 Climatic conditions

Unless otherwise specified by the committee responsible for the generic or product standard, the climatic conditions in the laboratory shall be within any limits specified for the operation of the EUT and the test equipment by their respective manufacturers.

Tests shall not be performed if the relative humidity is so high as to cause condensation on the EUT or the test equipment.

NOTE Where it is considered that there is sufficient evidence to demonstrate that the effects of the phenomenon covered by this standard are influenced by climatic conditions, this should be brought to the attention of the committee responsible for this standard.

Documents
Document Sharing Hub

Full document details: IEC 61000-4-8 2009

8.2.3 Electromagnetic conditions

The electromagnetic conditions of the laboratory shall be such as to guarantee the correct operation of the EUT in order not to influence the test results; otherwise, the tests shall be carried out in a Faraday cage.

In particular, the power frequency magnetic field value of the laboratory shall be at least 20 dB lower than the selected test level.

8.3 Carrying out the test

Care should be taken for any person in the laboratory with respect to applicable requirements regarding human exposure. If no requirements exist on human protection, a distance of 2 m is recommended.

The test shall be carried out on the basis of a test plan including verification of the performances of the EUT as defined in the technical specification.

The power supply, signal and other functional electrical quantities shall be applied within their rated range.

If the actual operating signals are not available, they may be simulated.

Preliminary verification of equipment performances shall be carried out prior to applying the test magnetic field.

The test magnetic field shall be applied by the immersion method to the EUT, previously set up as specified in 7.3.

The test level shall not exceed the product specification.

The test field strength and the duration of the test shall be as determined by the selected test level, according to the different type of fields (continuous or short duration field) established in the test plan.

a) Table-top equipment

   The equipment shall be subjected to the test magnetic field as shown in Figure 3.

   The plane of the inductive coil shall then be rotated by 90° in order to expose the EUT to the test field with different orientations.

b) Floor-standing equipment

   The equipment shall be subjected to the test magnetic field by using inductive coils of suitable dimensions as specified in 6.3.3 b). The test shall be repeated by moving and shifting the inductive coils, in order to test the whole volume of the EUT for each orthogonal direction (see Figure 5).

   If the EUT is larger than the 3 dB test volume of the inductive coil, then the test shall be repeated with the coil moved to different positions, in steps corresponding to 50 % of the shortest side of the coil, so that the entire EUT is progressively immersed in the 3 dB test volume.

   NOTE The moving of the inductive coil in steps corresponding to 50 % of the shortest side of the coil gives overlapping test fields.

   The plane of the inductive coil shall then be rotated by 90° in order to expose the EUT to the test field with different orientations and the same procedure.

Documents
Document Sharing Hub

Full document details: IEC 61000-4-8 2009

9 Evaluation of the test results

The test results shall be classified in terms of the loss of function or degradation of performance of the equipment under test, relative to a performance level defined by its manufacturer or the requestor of the test, or agreed between the manufacturer and the purchaser of the product. The recommended classification is as follows:

a) normal performance within limits specified by the manufacturer, requestor or purchaser;

b) temporary loss of function or degradation of performance which ceases after the disturbance ceases, and from which the equipment under test recovers its normal performance, without operator intervention;

c) temporary loss of function or degradation of performance, the correction of which requires operator intervention;

d) loss of function or degradation of performance which is not recoverable, owing to damage to hardware or software, or loss of data.

The manufacturer's specification may define effects on the EUT which may be considered insignificant, and therefore acceptable.

This classification may be used as a guide in formulating performance criteria, by committees responsible for generic, product and product-family standards, or as a framework for the agreement on performance criteria between the manufacturer and the purchaser, for example where no suitable generic, product or product-family standard exists.

10 Test report

The test report shall contain all the information necessary to reproduce the test. In particular, the following shall be recorded:

– the items specified in the test plan required by Clause 8 of this standard;

– identification of the EUT and any associated equipment, for example, brand name, product type, serial number;

– identification of the test equipment, for example, brand name, product type, serial number;

– any special environmental conditions in which the test was performed, for example, shielded enclosure;

– any specific conditions necessary to enable the test to be performed;

– performance level defined by the manufacturer, requestor or purchaser;

– performance criterion specified in the generic, product or product-family standard;

– any effects on the EUT observed during or after the application of the test disturbance, and the duration for which these effects persist;

– the rationale for the pass/fail decision (based on the performance criterion specified in the generic, product or product-family standard, or agreed between the manufacturer and the purchaser);

– any specific conditions of use, for example cable length or type, shielding or grounding, or EUT operating conditions, which are required to achieve compliance.

Documents
Document Sharing Hub

Full document details: IEC 61000-4-8 2009

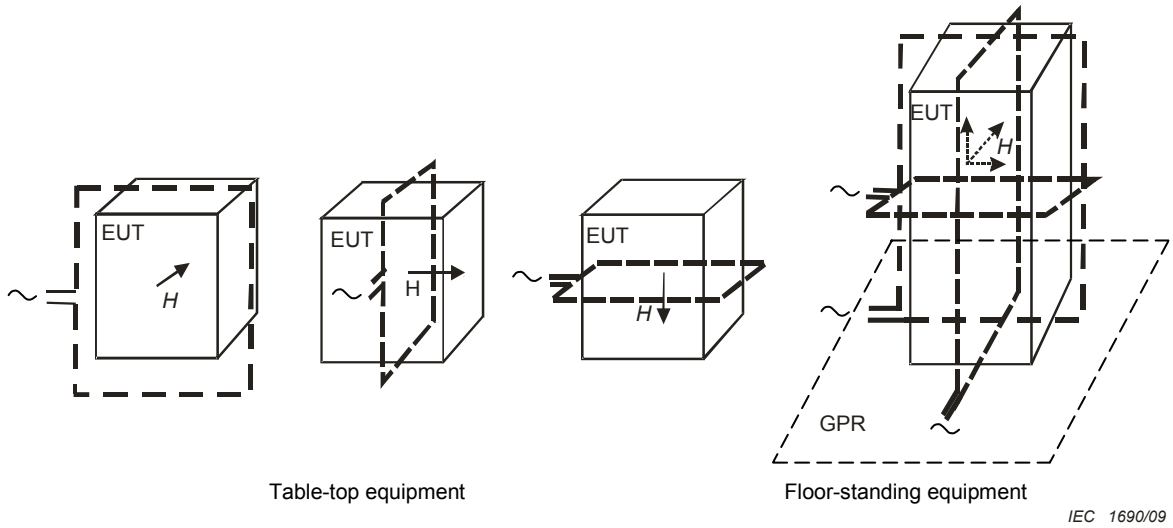

Figure 1 – Example of application of the test field by the immersion method

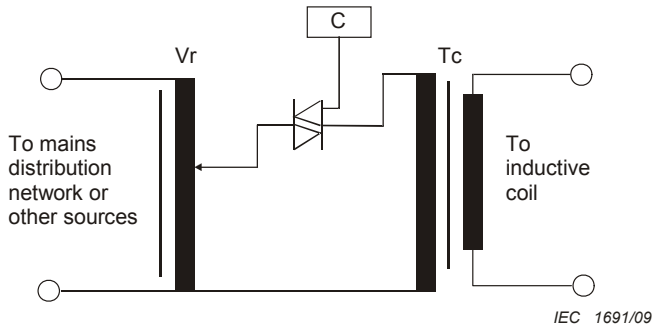

Components

Vr Voltage regulator

C Control circuit

Tc Current transformer

Figure 2 – Example of schematic circuit of the test generator for power frequency magnetic field

Documents
Document Sharing Hub
Full document details: IEC 61000-4-8 2009

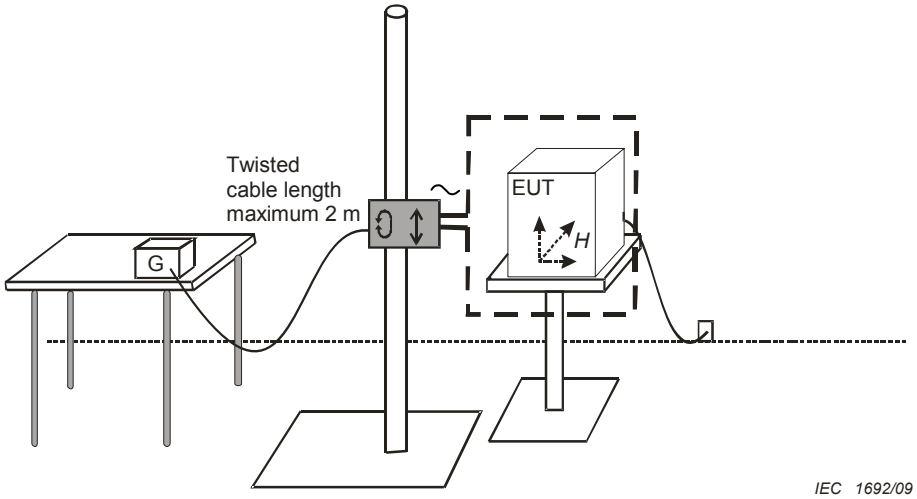

Figure 3 – Example of test set-up for table-top equipment

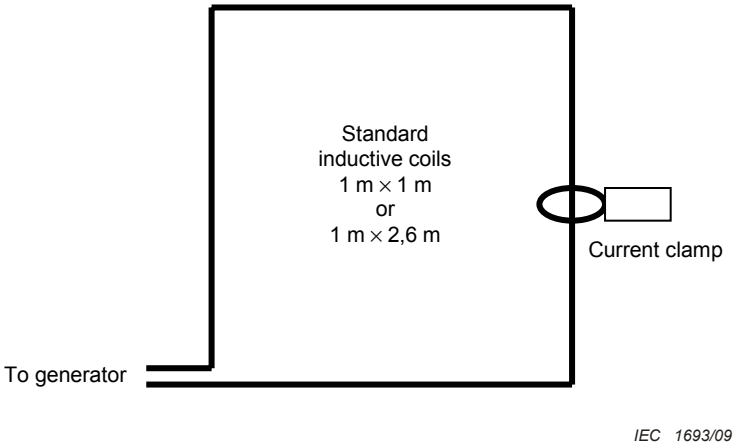

Figure 4 – Calibration of the standard coils

Documents
Document Sharing Hub
Full document details: IEC 61000-4-8 2009