IEC 61008-2-1

Edition 2.0 2024-11

INTERNATIONAL STANDARD

NORME INTERNATIONALE

Residual current operated circuit-breakers without integral overcurrent protection for household and similar uses (RCCBs) – Part 2-1: RCCBs according to classification 4.1.1

Interrupteurs automatiques à courant différentiel résiduel sans dispositif de protection contre les surintensités incorporé pour usages domestiques et analogiques (ID) – Partie 2-1: ID conformes à la classification en 4.1.1

IEC 61008-2-1:2024-11(en-fr)

Documents
Document Sharing Hub

Full document details: IEC 61008-2-1-2024

THIS PUBLICATION IS COPYRIGHT PROTECTED
Copyright © 2024 IEC, Geneva, Switzerland

All rights reserved. Unless otherwise specified, no part of this publication may be reproduced or utilized in any form or by any means, electronic or mechanical, including photocopying and microfilm, without permission in writing from either IEC or IEC's member National Committee in the country of the requester. If you have any questions about IEC copyright or have an enquiry about obtaining additional rights to this publication, please contact the address below or your local IEC member National Committee for further information.

Droits de reproduction réservés. Sauf indication contraire, aucune partie de cette publication ne peut être reproduite ni utilisée sous quelque forme que ce soit et par aucun procédé, électronique ou mécanique, y compris la photocopie et les microfilms, sans l'accord écrit de l'IEC ou du Comité national de l'IEC du pays du demandeur. Si vous avez des questions sur le copyright de l'IEC ou si vous désirez obtenir des droits supplémentaires sur cette publication, utilisez les coordonnées ci-après ou contactez le Comité national de l'IEC de votre pays de résidence.

IEC Secretariat
3, rue de Varembé
CH-1211 Geneva 20
Switzerland

Tel.: +41 22 919 02 11
info@iec.ch
www.iec.ch

About the IEC
The International Electrotechnical Commission (IEC) is the leading global organization that prepares and publishes International Standards for all electrical, electronic and related technologies.

About IEC publications
The technical content of IEC publications is kept under constant review by the IEC. Please make sure that you have the latest edition, a corrigendum or an amendment might have been published.

IEC publications search - webstore.iec.ch/advsearchform
The advanced search enables to find IEC publications by a variety of criteria (reference number, text, technical committee, …). It also gives information on projects, replaced and withdrawn publications.

IEC Just Published - webstore.iec.ch/justpublished
Stay up to date on all new IEC publications. Just Published details all new publications released. Available online and once a month by email.

IEC Customer Service Centre - webstore.iec.ch/csc
If you wish to give us your feedback on this publication or need further assistance, please contact the Customer Service Centre: sales@iec.ch.

IEC Products & Services Portal - products.iec.ch
Discover our powerful search engine and read freely all the publications previews, graphical symbols and the glossary. With a subscription you will always have access to up to date content tailored to your needs.

Electropedia - www.electropedia.org
The world's leading online dictionary on electrotechnology, containing more than 22 500 terminological entries in English and French, with equivalent terms in 25 additional languages. Also known as the International Electrotechnical Vocabulary (IEV) online.

A propos de l'IEC
La Commission Electrotechnique Internationale (IEC) est la première organisation mondiale qui élabore et publie des Normes internationales pour tout ce qui a trait à l'électricité, à l'électronique et aux technologies apparentées.

A propos des publications IEC
Le contenu technique des publications IEC est constamment revu. Veuillez vous assurer que vous possédez l'édition la plus récente, un corrigendum ou amendement peut avoir été publié.

Recherche de publications IEC - webstore.iec.ch/advsearchform
La recherche avancée permet de trouver des publications IEC en utilisant différents critères (numéro de référence, texte, comité d'études, …). Elle donne aussi des informations sur les projets et les publications remplacées ou retirées.

IEC Just Published - webstore.iec.ch/justpublished
Restez informé sur les nouvelles publications IEC. Just Published détaille les nouvelles publications parues. Disponible en ligne et une fois par mois par email.

Service Clients - webstore.iec.ch/csc
Si vous désirez nous donner des commentaires sur cette publication ou si vous avez des questions contactez-nous: sales@iec.ch.

IEC Products & Services Portal - products.iec.ch
Découvrez notre puissant moteur de recherche et consultez gratuitement tous les aperçus des publications, symboles graphiques et le glossaire. Avec un abonnement, vous aurez toujours accès à un contenu à jour adapté à vos besoins.

Electropedia - www.electropedia.org
Le premier dictionnaire d'électrotechnologie en ligne au monde, avec plus de 22 500 articles terminologiques en anglais et en français, ainsi que les termes équivalents dans 25 langues additionnelles. Egalement appelé Vocabulaire Electrotechnique International (IEV) en ligne.

Documents
Document Sharing Hub

Full document details: IEC 61008-2-1-2024

IEC 61008-2-1

Edition 2.0 2024-11

INTERNATIONAL STANDARD

NORME INTERNATIONALE

Residual current operated circuit-breakers without integral overcurrent protection for household and similar uses (RCCBs) – Part 2-1: RCCBs according to classification 4.1.1

Interrupteurs automatiques à courant différentiel résiduel sans dispositif de protection contre les surintensités incorporé pour usages domestiques et analogiques (ID) – Partie 2-1: ID conformes à la classification en 4.1.1

INTERNATIONAL
ELECTROTECHNICAL
COMMISSION

COMMISSION
ELECTROTECHNIQUE
INTERNATIONALE

ICS 29.120.50

ISBN 978-2-8327-0008-2

Warning! Make sure that you obtained this publication from an authorized distributor.
Attention! Veuillez vous assurer que vous avez obtenu cette publication via un distributeur agréé.

® Registered trademark of the International Electrotechnical Commission
Marque déposée de la Commission Electrotechnique Internationale

Documents
Document Sharing Hub

Full document details: IEC 61008-2-1-2024

CONTENTS

FOREWORD 4
1 Scope 6
2 Normative references 6
3 Terms and definitions 6
4 Classification 7
4.1 According to the supply conditions 7
4.1.1 RCCB operating correctly on the occurrence of residual current 7
5 Characteristics of RCCBs 7
6 Marking and other product information 7
7 Standard conditions for operation in service and for installation 7
8 Requirements for construction and operation 7
9 Tests 7
9.1 General 7
9.8 Test of temperature-rise 7
9.8.2 Test procedure 7
9.9 Verification of the operating characteristics 8
9.9.1 Verification of the operating characteristics under residual current conditions 8
9.15 Verification of the trip-free mechanism 11
9.15.1 General test conditions 11
9.15.2 Test procedure 11
9.18 Verification of the behaviour of RCCBs in the event of overcurrent in the main circuit 11
9.19 Verification of the behaviour of RCCBs in event of current surges caused by impulse voltages 11
9.19.1 Current surge test for all RCCBs (0,5 µs / 100 kHz ring wave test) 11
9.19.2 Verification of the behaviour at surge currents up to 3 000 A (8/20 µs surge current test) 12
9.20 Verification of reliability 12
9.20.2 Test with temperature of 40 °C 12
9.21 Verification of withstand against ageing 12
9.22 Electromagnetic compatibility (EMC) 12
Annex A (normative) Test sequence and number of samples to be submitted for certification purposes 16
A.1 Test sequences 16
A.2 Number of samples to be submitted for full test procedure 17
A.3 Number of samples to be submitted for simplified test procedures in the case if submitting simultaneously a range of RCCBs of the same fundamental design 18
Annex D (normative) Routine tests 22
D.3 Dielectric strength test 22
Bibliography 23

Figure 2 – Test circuit for the verification of operating characteristics and trip-free mechanism for RCCBs classified according to 4.1.1 13
Figure 3 – Test circuit for the verification of the correct operation in the case of residual pulsating direct currents for RCCBs classified according to 4.1.1 14

AVA Documents
Document Sharing Hub
Full document details: IEC 61008-2-1-2024

Figure 4 – Test circuit for the verification of the correct operation in the case of residual pulsating direct currents in the presence of a standing smooth direct current of 0,006 A for RCCBs classified according to 4.1.1 15

Table A.1 – Test sequences 16

Table A.2 – Number of samples for full test procedure 18

Table A.3 – Number of samples for simplified test procedure 19

Table A.4 – Test sequences for RCCBs of different classification according to 4.3 of IEC 61008-1:2024 21

Documents
Document Sharing Hub

Full document details: IEC 61008-2-1-2024

INTERNATIONAL ELECTROTECHNICAL COMMISSION

RESIDUAL CURRENT OPERATED CIRCUIT-BREAKERS WITHOUT INTEGRAL OVERCURRENT PROTECTION FOR HOUSEHOLD AND SIMILAR USES (RCCBs) –

Part 2-1: RCCBs according to classification 4.1.1

FOREWORD

1) The International Electrotechnical Commission (IEC) is a worldwide organization for standardization comprising all national electrotechnical committees (IEC National Committees). The object of IEC is to promote international co-operation on all questions concerning standardization in the electrical and electronic fields. To this end and in addition to other activities, IEC publishes International Standards, Technical Specifications, Technical Reports, Publicly Available Specifications (PAS) and Guides (hereafter referred to as "IEC Publication(s)"). Their preparation is entrusted to technical committees; any IEC National Committee interested in the subject dealt with may participate in this preparatory work. International, governmental and non-governmental organizations liaising with the IEC also participate in this preparation. IEC collaborates closely with the International Organization for Standardization (ISO) in accordance with conditions determined by agreement between the two organizations.
2) The formal decisions or agreements of IEC on technical matters express, as nearly as possible, an international consensus of opinion on the relevant subjects since each technical committee has representation from all interested IEC National Committees.
3) IEC Publications have the form of recommendations for international use and are accepted by IEC National Committees in that sense. While all reasonable efforts are made to ensure that the technical content of IEC Publications is accurate, IEC cannot be held responsible for the way in which they are used or for any misinterpretation by any end user.
4) In order to promote international uniformity, IEC National Committees undertake to apply IEC Publications transparently to the maximum extent possible in their national and regional publications. Any divergence between any IEC Publication and the corresponding national or regional publication shall be clearly indicated in the latter.
5) IEC itself does not provide any attestation of conformity. Independent certification bodies provide conformity assessment services and, in some areas, access to IEC marks of conformity. IEC is not responsible for any services carried out by independent certification bodies.
6) All users should ensure that they have the latest edition of this publication.
7) No liability shall attach to IEC or its directors, employees, servants or agents including individual experts and members of its technical committees and IEC National Committees for any personal injury, property damage or other damage of any nature whatsoever, whether direct or indirect, or for costs (including legal fees) and expenses arising out of the publication, use of, or reliance upon, this IEC Publication or any other IEC Publications.
8) Attention is drawn to the Normative references cited in this publication. Use of the referenced publications is indispensable for the correct application of this publication.
9) IEC draws attention to the possibility that the implementation of this document may involve the use of (a) patent(s). IEC takes no position concerning the evidence, validity or applicability of any claimed patent rights in respect thereof. As of the date of publication of this document, IEC had not received notice of (a) patent(s), which may be required to implement this document. However, implementers are cautioned that this may not represent the latest information, which may be obtained from the patent database available at https://patents.iec.ch. IEC shall not be held responsible for identifying any or all such patent rights.

IEC 61008-2-1 has been prepared by subcommittee 23E: Circuit-breakers and similar equipment for household use, of IEC technical committee 23: Electrical accessories. It is an International Standard.

This second edition cancels and replaces the first edition published in 1990. This edition constitutes a technical revision.

This edition includes the following significant technical changes with respect to the previous edition:

– harmonization of all clauses between the IEC 61008, IEC 61009 and IEC 60755 series using blocks and modules approach;

Documents
Document Sharing Hub
Full document details: IEC 61008-2-1-2024

– harmonization of all tables and figures between the IEC 61008, IEC 61009 and IEC 60755 series;
– terms and definitions are now referred to IEC 62873-2;
– modification of 4.1 for classification according to supply conditions;
– specific tests for operating characteristics (9.9) of RCCB according to classification 4.1.1;
– specific test conditions for temperature-rise (9.8), verification of trip-free (9.15), surge current tests (9.19), reliability (9.20) and ageing (9.21).

The text of this International Standard is based on the following documents:

Draft	Report on voting
23E/1369/FDIS	23E/1386/RVD

Full information on the voting for its approval can be found in the report on voting indicated in the above table.

The language used for the development of this International Standard is English.

This International Standard is to be used in conjunction with IEC 61008-1:2024.

Where this document states "addition", "deletion" or "replacement", the corresponding requirement, test specification or explanatory material in IEC 61008-1:2024 is adapted accordingly.

Where this document defines a new subclause, this subclause number starts at 100 (for example an additional definition in this document would read 3.100).

This document was drafted in accordance with ISO/IEC Directives, Part 2, and developed in accordance with ISO/IEC Directives, Part 1 and ISO/IEC Directives, IEC Supplement, available at www.iec.ch/members_experts/refdocs. The main document types developed by IEC are described in greater detail at www.iec.ch/publications.

A list of all parts in the IEC 61008 series, published under the general title *Residual current operated circuit-breakers without integral overcurrent protection for household and similar uses (RCCBs)*, can be found on the IEC website.

The committee has decided that the contents of this document will remain unchanged until the stability date indicated on the IEC website under webstore.iec.ch in the data related to the specific document. At this date, the document will be

- reconfirmed,
- withdrawn, or
- revised.

Documents
Document Sharing Hub

Full document details: IEC 61008-2-1-2024

RESIDUAL CURRENT OPERATED CIRCUIT-BREAKERS WITHOUT INTEGRAL OVERCURRENT PROTECTION FOR HOUSEHOLD AND SIMILAR USES (RCCBs) –

Part 2-1: RCCBs according to classification 4.1.1

1 Scope

IEC 61008-1:2024, Clause 1 is applicable except for the first paragraph, which is replaced by the first paragraph below, and the last paragraph, which is replaced by the second paragraph below:

This part of IEC 61008 applies to residual current operated circuit-breakers, without integral overcurrent protection, for household and similar uses (hereafter referred to as RCCBs), classified according to IEC 61008-1:2024, 4.1.1. RCCBs according to this document are intended for voltages not exceeding 440 V AC with frequencies of 50 Hz, 60 Hz or 50/60 Hz and currents not exceeding 125 A, intended principally for protection against shock hazard.

This document applies in conjunction with IEC 61008-1:2024. It specifies requirements, tests and test sequences to verify compliance and is used for certification purposes.

2 Normative references

The following documents are referred to in the text in such a way that some or all of their content constitutes requirements of this document. For dated references, only the edition cited applies. For undated references, the latest edition of the referenced document (including any amendments) applies.

IEC 61008-1:2024, *Residual current operated circuit-breakers without integral overcurrent protection for household and similar uses (RCCBs) – Part 1: General rules*

IEC 61543:2022, *Residual current-operated protective devices (RCDs) for household and similar use – Electromagnetic compatibility*

IEC 62873-2, *Residual current operated circuit-breakers for household and similar use – Part 2: Residual current devices (RCDs) – Vocabulary*

3 Terms and definitions

For the purposes of this document, the terms and definitions given in IEC 62873-2 and in IEC 61008-1 apply.

ISO and IEC maintain terminological databases for use in standardization at the following addresses:

- ISO Online browsing platform: available at https://www.iso.org/obp
- IEC Electropedia: available at https://www.electropedia.org/

Documents
Document Sharing Hub

Full document details: IEC 61008-2-1-2024

4 Classification

IEC 61008-1:2024, Clause 4 applies with the following modifications (deletion of 4.1.2, 4.1.3, 4.1.4, 4.1.5 and 4.1.6):

4.1 According to the supply conditions

4.1.1 RCCB operating correctly on the occurrence of residual current

- within the voltage range 1,1 U_e and zero volt; and
- with any number of supply conductors connected.

The RCCB does not open automatically in the event of loss of supply.

5 Characteristics of RCCBs

IEC 61008-1:2024, Clause 5 applies.

6 Marking and other product information

IEC 61008-1:2024, Clause 6 applies.

7 Standard conditions for operation in service and for installation

IEC 61008-1:2024, Clause 7 applies.

8 Requirements for construction and operation

IEC 61008-1:2024, Clause 8 applies.

9 Tests

IEC 61008-1:2024, Clause 9 applies with the following modifications.

9.1 General

IEC 61008-1:2024, 9.1 applies with the following modification:

Replace the third paragraph by:

The test sequences and the number of samples to be submitted are stated in Annex A.

9.8 Test of temperature-rise

9.8.2 Test procedure

IEC 61008-1:2024, 9.8.2 applies with the following addition:

The test is performed at any convenient voltage.

Documents
Document Sharing Hub

Full document details: IEC 61008-2-1-2024

9.9 Verification of the operating characteristics

9.9.1 Verification of the operating characteristics under residual current conditions

9.9.1.1 Test circuit and test procedure

The RCCB is installed as for normal use.

The test circuit shall be of negligible inductance. For tests according to 9.9.1.2, the test circuit shall correspond to Figure 2. For tests according to 9.9.1.3, the test circuit shall correspond to Figure 3 or Figure 4, as applicable.

The instruments for the measurement of the residual current shall display (or allow to determine) the true RMS value.

Unless otherwise specified in this document, the tests are performed with no load at the ambient air temperature of 20 °C ± 5 °C.

The RCCB shall perform the tests of 9.9.1.2 and 9.9.1.3, as applicable.

Each test is performed by applying the residual current to one pole only, taken at random, with five measurements, unless otherwise specified in this document. The other poles shall not be connected to the supply, unless otherwise specified in this document.

For RCCBs having more than one rated frequency, the tests shall be carried out at the lowest and highest frequency, except for the test in 9.9.1.2.5 where verification is performed at one frequency only.

For RCCBs having multiple settings of residual operating current, the tests shall be carried out for each setting.

9.9.1.2 Tests for all RCCBs

9.9.1.2.1 Verification of correct operation in the case of a steady increase of the residual current

The switch S_1 and the RCCB being in the closed position, the residual current is steadily increased, starting from a value not higher than 0,2 $I_{\Delta n}$, trying to attain the value of $I_{\Delta n}$ within 30 s. The test shall be performed five times, the tripping current being measured each time.

All five measured values shall be situated between $I_{\Delta no}$ and $I_{\Delta n}$.

9.9.1.2.2 Verification of correct operation on closing on a residual current

The test circuit being calibrated at the value of the rated residual operating current $I_{\Delta n}$ and the switch S_1 being closed, the RCCB is closed to simulate service conditions as closely as possible.

The break time is measured five times. No measurement shall exceed the limiting value specified for $I_{\Delta n}$ in IEC 61008-1:2024, Table 11, according to the type of RCCB.

Documents
Document Sharing Hub
Full document details: IEC 61008-2-1-2024

9.9.1.2.3 Verification of correct operation in the case of sudden appearance of residual current

1) All types

   The test circuit being successively calibrated at each of the values of residual current specified in IEC 61008-1:2024, Table 11, the RCCB being in the closed position, the test current is suddenly established by closing the switch S_1.

   The RCCB shall trip during each test.

   Five measurements of the break time are carried out at each value of residual current.

   No value shall exceed the relevant specified limiting value given in IEC 61008-1:2024, Table 11.

2) Additional test for type S

   The test circuit being successively calibrated at each of the values of residual current specified in IEC 61008-1:2024, Table 11, the RCCB being in the closed position, the residual current is suddenly established by closing the switch S_1 for periods corresponding to the relevant minimum non-actuating times, with a tolerance of $^{0}_{-5}$ %.

   Each application of residual current shall be separated from the previous one by an interval of at least 1 min.

   The RCCB shall not trip during any of the tests.

9.9.1.2.4 Verification of correct operation in the case of sudden appearance of residual currents between 5 $I_{\Delta n}$ and 500 A

The test circuit is calibrated successively to the following values of the residual current:

5 A, 10 A, 20 A, 50 A, 100 A and 200 A.

The RCCB being in the closed position, the residual current is suddenly established by closing the switch S_1.

The RCCB shall trip during each test. The break time shall not exceed the times given in IEC 61008-1:2024, Table 11.

The test is carried out once for each value of residual current on one pole only, taken at random.

9.9.1.2.5 Verification of correct operation with load

The tests of 9.9.1.2.2 and 9.9.1.2.3 are repeated, the pole under test and one other pole of the RCCB being loaded with rated current, at any convenient voltage.

This test is not intended to reach thermal steady-state conditions.

NOTE The loading with rated current is not shown in Figure 2.

9.9.1.2.6 Tests at the temperature limits

The RCCB shall perform the tests specified in 9.9.1.2.3 under the following conditions, successively:

1) ambient air temperature: −5 °C, off-load, the residual current being connected to one current path only;
2) ambient air temperature: +40 °C, the RCCB having been previously loaded with the rated current, at any convenient voltage, until it attains thermal steady-state conditions.

Documents
Document Sharing Hub
Full document details: IEC 61008-2-1-2024

Preheating may be carried out at any convenient voltage at either 50 Hz or 60 Hz but auxiliary circuits shall be supplied at rated voltage, or loaded with rated current, as applicable.

In practice, these conditions are reached when the variation of temperature-rise does not exceed 1 K per hour.

For the tripping tests in 2), the flow of rated current may be interrupted, provided that the total interruption period does not exceed 30 s. As soon as the sum of interruption periods exceeds 30 s, the RCCB shall be loaded again with rated current for 5 min before next tripping time measurement.

9.9.1.3 Additional verification of correct operation for RCCBs of type A

9.9.1.3.1 Verification of correct operation in the case of a continuous rise of residual pulsating direct current

The test shall be performed according to Figure 3.

The switches S_1 and the RCCB shall be closed. The relevant thyristor shall be controlled in such a manner that current delay angles α of 0°, 90° and 135° are obtained. Each pole of the RCCB shall be tested twice at each of the current delay angles, in position I as well as in position II of the switch S_2.

For each test, the current shall be steadily increased at an approximate rate of 1,4 $I_{\Delta n}$ / 30 amperes per second for RCCBs with $I_{\Delta n}$ > 0,01 A, and at an approximate rate of 2 $I_{\Delta n}$ / 30 amperes per second for RCCBs with $I_{\Delta n}$ ≤ 0,01 A, starting from zero. The tripping current shall be in accordance with IEC 61008-1:2024, Table 14.

9.9.1.3.2 Verification of correct operation in the case of suddenly appearing residual pulsating direct currents

The RCCB shall be tested according to Figure 3.

The circuit being successively calibrated at the values specified hereafter and the RCCB being in the closed position, the residual current is suddenly established by closing the switch S_1.

The test is carried out at each value of residual current specified in IEC 61008-1:2024, Table 12, according to the type of RCCB.

Two measurements of the break time are made at each value of residual current, at a current delay angle α = 0° with the switch S_2 in position I for the first measurement and in position II for the second measurement.

No value shall exceed the specified limiting values.

9.9.1.3.3 Verification of correct operation with load

The tests of 9.9.1.3.1 are repeated, the pole under test and one other pole of the RCCB being loaded with the rated current, at any convenient voltage.

For this test, it is not intended to reach thermal steady-state conditions.

NOTE The loading with rated current is not shown in Figure 3.

Documents
Document Sharing Hub
Full document details: IEC 61008-2-1-2024

9.9.1.3.4 Verification of correct operation in the case of residual pulsating direct currents superimposed by a smooth direct current of 0,006 A

The RCCB shall be tested according to Figure 4 with a half-wave rectified residual current (current delay angle α = 0°) superimposed by a smooth direct current of 0,006 A of same polarity.

Each pole of the RCCB is tested in turn, twice at each of positions I and II.

For each test, the current shall be steadily increased at an approximate rate of 1,4 $I_{\Delta n}$ / 30 amperes per second for RCCBs with $I_{\Delta n}$ > 0,01 A, and at an approximate rate of 2 $I_{\Delta n}$ / 30 amperes per second for RCCBs with $I_{\Delta n}$ ≤ 0,01 A, starting from zero. The tripping current shall be in accordance with the upper limit of IEC 61008-1:2024, Table 14.

9.15 Verification of the trip-free mechanism

9.15.1 General test conditions

The RCCB is mounted and wired as in normal use and supplied under the conditions of 9.9.1.1.

The RCCB is tested in a substantially non-inductive circuit, the diagram of which is shown in Figure 2.

For RCCBs having multiple settings, the test is carried out for each setting.

If the RCCB is fitted with more than one operating means, the trip-free operation is verified for all operating means.

9.15.2 Test procedure

A residual current equal to 1,5 $I_{\Delta n}$ is passed by closing the switch S_1, the RCCB having been closed and the operating means being held in the closed position. The RCCB shall trip.

This test is then repeated by moving the operating means of the RCCB slowly over a period of approximately 1 s to a position where the current starts to flow. Tripping shall occur without further movement of the operating means.

Both tests are carried out three times, at least once on each pole intended to be connected to a phase.

9.18 Verification of the behaviour of RCCBs in the event of overcurrent in the main circuit

IEC 61008-1:2024, 9.18 applies with the following addition before the first paragraph:

The test is performed at any convenient voltage.

9.19 Verification of the behaviour of RCCBs in event of current surges caused by impulse voltages

9.19.1 Current surge test for all RCCBs (0,5 µs / 100 kHz ring wave test)

IEC 61008-1:2024, 9.19.1 applies with the following addition:

The test is performed without the RCCB being connected to the supply voltage.

Documents
Document Sharing Hub
Full document details: IEC 61008-2-1-2024

9.19.2 Verification of the behaviour at surge currents up to 3 000 A (8/20 µs surge current test)

9.19.2.1 Test conditions

IEC 61008-1:2024, 9.19.2.1 applies with the following addition:

The test is performed without the RCCB being connected to the supply voltage.

9.20 Verification of reliability

9.20.1.3 Test procedure

IEC 61008-1:2024, 9.20.1.3 applies with the following addition after b) 1):

The RCCBs shall be in the closed position and not supplied.

9.20.2 Test with temperature of 40 °C

IEC 61008-1:2024, 9.20.2 applies with the following addition:

The test is performed at any convenient voltage.

9.21 Verification of withstand against ageing

IEC 61008-1:2024, 9.21 applies with the following addition:

The test is performed at any convenient voltage.

9.22 Electromagnetic compatibility (EMC)

RCCBs shall be tested according to the test sequences H, I and J listed in Annex A.

The test T1 of IEC 61543 does not apply.

Documents
Document Sharing Hub

Full document details: IEC 61008-2-1-2024

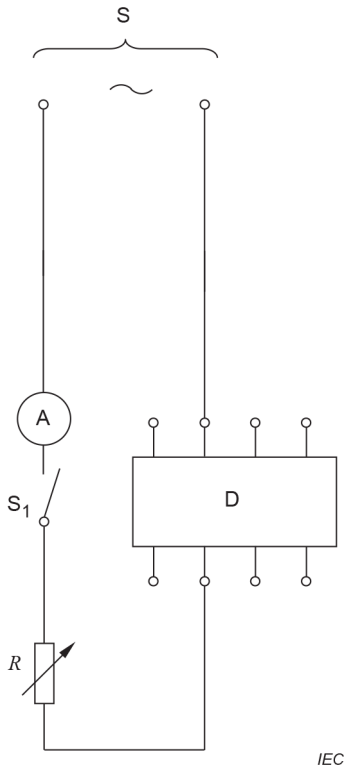

Key

S Voltage source

A Ammeter

S_1 Single-pole switch

D RCCB under test

R Variable resistor

Figure 2 – Test circuit for the verification of operating characteristics and trip-free mechanism for RCCBs classified according to 4.1.1

Documents
Document Sharing Hub
Full document details: IEC 61008-2-1-2024

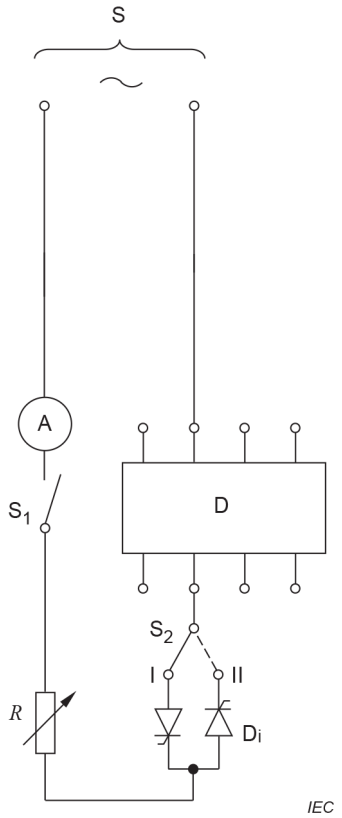

Key

S Voltage source

A Ammeter (measuring RMS values)

D RCCB under test

D_i Thyristors

R Variable resistor

S_1 Single-pole switch

S_2 Two-way switch

Figure 3 – Test circuit for the verification of the correct operation in the case of residual pulsating direct currents for RCCBs classified according to 4.1.1

Documents
Document Sharing Hub
Full document details: IEC 61008-2-1-2024