IEC 61010-2-030

Edition 3.0 2023-09
EXTENDED VERSION

INTERNATIONAL STANDARD

colour inside

This extended version of IEC 61010-2-030:2023 includes the content of the references made to IEC 61010-1:2010 and IEC 61010-1:2010/AMD1:2016

GROUP SAFETY PUBLICATION

Safety requirements for electrical equipment for measurement, control, and laboratory use –
Part 2-030: Particular requirements for equipment having testing or measuring circuits

IEC 61010-2-030:2023-09 EXV(en)

Documents
Document Sharing Hub

Full document details: IEC 61010-2-030 2023 EXV

THIS PUBLICATION IS COPYRIGHT PROTECTED
Copyright © 2023 IEC, Geneva, Switzerland

All rights reserved. Unless otherwise specified, no part of this publication may be reproduced or utilized in any form or by any means, electronic or mechanical, including photocopying and microfilm, without permission in writing from either IEC or IEC's member National Committee in the country of the requester. If you have any questions about IEC copyright or have an enquiry about obtaining additional rights to this publication, please contact the address below or your local IEC member National Committee for further information.

IEC Secretariat
3, rue de Varembé
CH-1211 Geneva 20
Switzerland

Tel.: +41 22 919 02 11
info@iec.ch
www.iec.ch

About the IEC
The International Electrotechnical Commission (IEC) is the leading global organization that prepares and publishes International Standards for all electrical, electronic and related technologies.

About IEC publications
The technical content of IEC publications is kept under constant review by the IEC. Please make sure that you have the latest edition, a corrigendum or an amendment might have been published.

IEC publications search - webstore.iec.ch/advsearchform
The advanced search enables to find IEC publications by a variety of criteria (reference number, text, technical committee, …). It also gives information on projects, replaced and withdrawn publications.

IEC Just Published - webstore.iec.ch/justpublished
Stay up to date on all new IEC publications. Just Published details all new publications released. Available online and once a month by email.

IEC Customer Service Centre - webstore.iec.ch/csc
If you wish to give us your feedback on this publication or need further assistance, please contact the Customer Service Centre: sales@iec.ch.

IEC Products & Services Portal - products.iec.ch
Discover our powerful search engine and read freely all the publications previews. With a subscription you will always have access to up to date content tailored to your needs.

Electropedia - www.electropedia.org
The world's leading online dictionary on electrotechnology, containing more than 22 300 terminological entries in English and French, with equivalent terms in 19 additional languages. Also known as the International Electrotechnical Vocabulary (IEV) online.

Documents
Document Sharing Hub

Full document details: IEC 61010-2-030 2023 EXV

IEC 61010-2-030

Edition 3.0 2023-09
EXTENDED VERSION

INTERNATIONAL STANDARD

colour inside

This extended version of IEC 61010-2-030:2023 includes the content of the references made to IEC 61010-1:2010 and IEC 61010-1:2010/AMD1:2016

GROUP SAFETY PUBLICATION

Safety requirements for electrical equipment for measurement, control, and laboratory use –
Part 2-030: Particular requirements for equipment having testing or measuring circuits

INTERNATIONAL
ELECTROTECHNICAL
COMMISSION

ICS 19.080, 71.040.10

ISBN 978-2-8322-7562-7

Warning! Make sure that you obtained this publication from an authorized distributor.

® Registered trademark of the International Electrotechnical Commission

Documents
Document Sharing Hub

Full document details: IEC 61010-2-030 2023 EXV

Documents
Document Sharing Hub

Full document details: IEC 61010-2-030 2023 EXV

TC 66/Publication 61010-1 (2010), Third edition/I-SH 01

SAFETY REQUIREMENTS FOR ELECTRICAL EQUIPMENT FOR MEASUREMENT, CONTROL, AND LABORATORY USE –

Part 1: General requirements

INTERPRETATION SHEET 1

This interpretation sheet has been prepared by IEC technical committee 66: Safety of measuring, control and laboratory equipment.

The text of this interpretation sheet is based on the following documents:

ISH	Report on voting
66/497A/ISH	66/505/RVD

Full information on the voting for the approval of this interpretation sheet can be found in the report on voting indicated in the above table.

IEC 61010-1:2010 contains a requirement in 6.8.3.1 pertaining to voltage testers for type tests as follows:

"The generator shall be able to supply a power of at least 500 VA."

This has given rise to the following questions:

How does one interpret the requirement for voltage testers in 6.8.3.1 of IEC 61010-1:2010? Specifically, this subclause requires that "The generator shall be able to supply a power of at least 500 VA." Does this requirement apply throughout the rated output range of the voltage tester? What is meant by the word "generator"? Is the "generator" the power supply within the voltage tester, or the voltage tester output, or something else?

Interpretation:

"A voltage tester used for type tests must be able to deliver at least 500 VA at its full-rated output voltage. It does not necessarily need to deliver 500 VA if set for lower voltages.

For example, a voltage tester that can deliver 100 mA at any test output voltage up to 5 000 V (and a current corresponding to 500 VA above 5 000 V) would meet the requirement.

The requirements for voltage testers used for routine (production line) tests are included in Annex F. The requirements of 6.8.3.1 do not apply to these voltage testers."

February 2013 ICS 19.080, 71.040.10

Documents
Document Sharing Hub

Full document details: IEC 61010-2-030 2023 EXV

CONTENTS

FOREWORD 10
INTRODUCTION to IEC 61010-1:2010 and IEC 61010-1:2010/AMD1:2016 14
INTRODUCTION 15
1 Scope and object 16
1.1 Scope 16
1.1.1 Equipment included in scope 16
1.1.2 Equipment excluded from scope 16
1.1.3 Computing equipment 17
1.2 Object 17
1.2.1 Aspects included in scope 17
1.2.2 Aspects excluded from scope 17
1.3 Verification 17
1.4 Environmental conditions 18
1.4.1 Normal environmental conditions 18
1.4.2 Extended environmental conditions 18
2 Normative references 18
3 Terms and definitions 21
3.1 Equipment and states of equipment 21
3.2 Parts and accessories 21
3.3 Quantities 22
3.4 Tests 22
3.5 Safety terms 23
3.6 Insulation 24
4 Tests 26
4.1 General 26
4.2 Sequence of tests 26
4.3 Reference test conditions 26
4.3.1 Environmental conditions 26
4.3.2 State of equipment 27
4.4 Testing in SINGLE FAULT CONDITION 28
4.4.1 General 28
4.4.2 Application of fault conditions 29
4.4.3 Duration of tests 31
4.4.4 Conformity after application of fault conditions 31
5 Marking and documentation 32
5.1 Marking 32
5.1.1 General 32
5.1.2 Identification 32
5.1.3 MAINS supply 33
5.1.4 Fuses 34
5.1.5 TERMINALS, connections and operating devices 35
5.1.6 Switches and circuit-breakers 37
5.1.7 Equipment protected by DOUBLE INSULATION or REINFORCED INSULATION 37
5.1.8 Field-wiring TERMINAL boxes 37
5.2 Warning markings 37

AVA Documents
Document Sharing Hub
Full document details: IEC 61010-2-030 2023 EXV

5.3 Durability of markings ... 38
5.4 Documentation ... 38
5.4.1 General ... 38
5.4.2 Equipment RATINGS ... 39
5.4.3 Equipment installation ... 40
5.4.4 Equipment operation ... 40
5.4.5 Equipment maintenance and service ... 41
5.4.6 Integration into systems or effects resulting from special conditions ... 41
6 Protection against electric shock ... 41
6.1 General ... 41
6.1.1 Requirements ... 41
6.1.2 Exceptions ... 42
6.2 Determination of ACCESSIBLE parts ... 42
6.2.1 General ... 42
6.2.2 Examination ... 42
6.2.3 Openings above parts that are HAZARDOUS LIVE ... 43
6.2.4 Openings for pre-set controls ... 43
6.3 Limit values for ACCESSIBLE parts ... 43
6.3.1 Levels in NORMAL CONDITION ... 43
6.3.2 Levels in SINGLE FAULT CONDITION ... 44
6.4 Primary means of protection ... 47
6.4.1 General ... 47
6.4.2 ENCLOSURES and PROTECTIVE BARRIERS ... 47
6.4.3 BASIC INSULATION ... 47
6.4.4 Impedance ... 47
6.5 Additional means of protection in case of SINGLE FAULT CONDITIONS ... 47
6.5.1 General ... 47
6.5.2 PROTECTIVE BONDING ... 48
6.5.3 SUPPLEMENTARY INSULATION and REINFORCED INSULATION ... 52
6.5.4 PROTECTIVE IMPEDANCE ... 53
6.5.5 Automatic disconnection of the supply ... 53
6.5.6 Current- or voltage-limiting device ... 53
6.6 Connections to external circuits ... 54
6.6.1 General ... 54
6.6.2 TERMINALS for external circuits ... 54
6.6.3 Circuits with TERMINALS which are HAZARDOUS LIVE ... 54
6.6.4 TERMINALS for stranded conductors ... 54
6.6.101 Measuring circuit TERMINALS ... 55
6.7 Insulation requirements ... 57
6.7.1 The nature of insulation ... 57
6.7.2 Insulation for MAINS CIRCUITS of OVERVOLTAGE CATEGORY II with a nominal supply voltage up to 300 V ... 60
6.7.3 Insulation for secondary circuits derived from MAINS CIRCUITS of OVERVOLTAGE CATEGORY II up to 300 V ... 63
6.8 Procedure for voltage tests ... 69
6.8.1 General ... 69
6.8.2 Humidity preconditioning ... 70
6.8.3 Test procedures ... 71
6.9 Constructional requirements for protection against electric shock ... 72

AVA Documents
Document Sharing Hub
Full document details: IEC 61010-2-030 2023 EXV

6.9.1 General ... 72
6.9.2 Insulating materials ... 72
6.9.3 Colour coding ... 72
6.10 Connection to the MAINS supply source and connections between parts of equipment ... 72
6.10.1 MAINS supply cords ... 72
6.10.2 Fitting of non-detachable MAINS supply cords ... 73
6.10.3 Plugs and connectors ... 75
6.11 Disconnection from supply source ... 75
6.11.1 General ... 75
6.11.2 Exceptions ... 75
6.11.3 Requirements according to type of equipment ... 76
6.11.4 Disconnecting devices ... 76
7 Protection against mechanical HAZARDS ... 77
7.1 General ... 77
7.2 Sharp edges ... 77
7.3 Moving parts ... 77
7.3.1 General ... 77
7.3.2 Exceptions ... 78
7.3.3 RISK assessment for mechanical HAZARDS to body parts ... 78
7.3.4 Limitation of force and pressure ... 79
7.3.5 Gap limitations between moving parts ... 80
7.4 Stability ... 82
7.5 Provisions for lifting and carrying ... 83
7.5.1 General ... 83
7.5.2 Handles and grips ... 83
7.5.3 Lifting devices and supporting parts ... 83
7.6 Wall mounting ... 83
7.7 Expelled parts ... 84
8 Resistance to mechanical stresses ... 84
8.1 General ... 84
8.2 ENCLOSURE rigidity tests ... 85
8.2.1 Static test ... 85
8.2.2 Impact test ... 85
8.3 Drop test ... 86
8.3.1 Equipment other than HAND-HELD EQUIPMENT and DIRECT PLUG-IN EQUIPMENT ... 86
8.3.2 HAND-HELD EQUIPMENT and DIRECT PLUG-IN EQUIPMENT ... 87
9 Protection against the spread of fire and arc flash ... 87
9.1 General ... 87
9.2 Eliminating or reducing the sources of ignition within the equipment ... 89
9.3 Containment of fire within the equipment, should it occur ... 89
9.3.1 General ... 89
9.3.2 Constructional requirements ... 89
9.4 Limited-energy circuit ... 92
9.5 Requirements for equipment containing or using flammable liquids ... 93
9.6 Overcurrent protection ... 93
9.6.1 General ... 93
9.6.2 PERMANENTLY CONNECTED EQUIPMENT ... 94

AVA Documents
Document Sharing Hub
Full document details: IEC 61010-2-030 2023 EXV

9.6.3 Other equipment ... 94
9.101 Protection of measuring circuits ... 94
9.101.1 General ... 94
9.101.2 Protection against mismatches of inputs and ranges ... 94
9.101.3 Protection against MAINS overvoltages ... 97
10 Equipment temperature limits and resistance to heat ... 98
10.1 Surface temperature limits for protection against burns ... 98
10.2 Temperatures of windings ... 99
10.3 Other temperature measurements ... 99
10.4 Conduct of temperature tests ... 100
10.4.1 General ... 100
10.4.2 Temperature measurement of heating equipment ... 100
10.4.3 Equipment intended for installation in a cabinet or a wall ... 100
10.5 Resistance to heat ... 101
10.5.1 Integrity of CLEARANCES and CREEPAGE DISTANCES ... 101
10.5.2 Non-metallic ENCLOSURES ... 101
10.5.3 Insulating material ... 101
11 Protection against HAZARDS from fluids and solid foreign objects ... 102
11.1 General ... 102
11.2 Cleaning ... 102
11.3 Spillage ... 103
11.4 Overflow ... 103
11.5 Battery electrolyte ... 103
11.6 Equipment RATED with a degree of ingress protection (IP code) ... 103
11.6.1 General ... 103
11.6.2 Conditions for testing ... 104
11.6.3 Protection against solid foreign objects (including dust) ... 104
11.6.4 Protection against water ... 104
11.7 Fluid pressure and leakage ... 105
11.7.1 Maximum pressure ... 105
11.7.2 Leakage and rupture at high pressure ... 105
11.7.3 Leakage from low-pressure parts ... 106
11.7.4 Overpressure safety device ... 106
12 Protection against radiation, including laser sources, and against sonic and ultrasonic pressure ... 107
12.1 General ... 107
12.2 Equipment producing ionizing radiation ... 107
12.2.1 Ionizing radiation ... 107
12.2.2 Accelerated electrons ... 108
12.3 Optical radiation ... 108
12.4 Microwave radiation ... 109
12.5 Sonic and ultrasonic pressure ... 109
12.5.1 Sound level ... 109
12.5.2 Ultrasonic pressure ... 110
12.6 Laser sources ... 110
13 Protection against liberated gases and substances, explosion and implosion ... 111
13.1 Poisonous and injurious gases and substances ... 111
13.2 Explosion and implosion ... 111
13.2.1 Components ... 111

Documents
Document Sharing Hub
Full document details: IEC 61010-2-030 2023 EXV

13.2.2 Batteries and battery charging ... 111
13.2.3 Implosion of cathode ray tubes ... 112
14 Components and subassemblies ... 112
14.1 General ... 112
14.2 Motors ... 113
14.2.1 Motor temperatures ... 113
14.2.2 Series excitation motors ... 113
14.3 Overtemperature protection devices ... 114
14.4 Fuse holders ... 114
14.5 MAINS voltage selection devices ... 114
14.6 MAINS transformers tested outside equipment ... 114
14.7 Printed wiring boards ... 115
14.8 Circuits used to limit TRANSIENT OVERVOLTAGES ... 115
14.101 Probe assemblies and accessories ... 115
15 Protection by interlocks ... 116
15.1 General ... 116
15.2 Prevention of reactivating ... 116
15.3 Reliability ... 116
16 HAZARDS resulting from application ... 116
16.1 REASONABLY FORESEEABLE MISUSE ... 116
16.2 Ergonomic aspects ... 116
17 RISK assessment ... 117
101 Measuring circuits ... 117
101.1 General ... 117
101.2 Current measuring circuits ... 118
101.3 Indicating devices ... 118
101.3.1 General ... 118
101.3.2 Battery level ... 118
101.3.3 Over-range indication ... 119
101.3.4 Permanent overvoltages ... 119
Annex A (normative) Measuring circuits for touch current (see 6.3) ... 121
Annex B (normative) Standard test fingers (see 6.2) ... 124
Annex C (normative) Measurement of CLEARANCES and CREEPAGE DISTANCES ... 126
Annex D (normative) Parts between which insulation requirements are specified (see 6.4 and 6.5.3) ... 130
Annex E (informative) Guideline for reduction of POLLUTION DEGREES ... 133
Annex F (normative) ROUTINE TESTS ... 134
Annex G (informative) Leakage and rupture from fluids under pressure ... 136
Annex H (normative) Qualification of conformal coatings for protection against POLLUTION ... 141
Annex I (informative) Line-to-neutral voltages for common MAINS supply systems ... 144
Annex J (informative) RISK assessment ... 146
Annex K (normative) Insulation requirements not covered by 6.7 ... 149
Annex L (informative) Index of defined terms ... 176
Annex AA (normative) MEASUREMENT CATEGORIES ... 178
Annex BB (informative) HAZARDS pertaining to measurements performed in certain environments ... 181

AVA Documents
Document Sharing Hub
Full document details: IEC 61010-2-030 2023 EXV

Annex CC (informative) 4 mm "banana" TERMINALS 184
Annex DD (informative) Flowchart for insulation according to the type of circuit 186
Annex EE (informative) Determination of CLEARANCES for Table 101 189
Bibliography 190

Figure 1 – Measurements through openings in ENCLOSURES 43
Figure 2 – Maximum duration of short-term ACCESSIBLE voltages in SINGLE FAULT CONDITION (see 6.3.2 a)) 45
Figure 3 – Capacitance level versus voltage in NORMAL CONDITION and SINGLE FAULT CONDITION (see 6.3.1 c) and 6.3.2 c)) 46
Figure 4 – Acceptable arrangement of protective means against electric shock 48
Figure 5 – Examples of binding screw assemblies 50
Figure 101 – Duration of current flow versus body current for a.c. and d.c. currents 52
Figure 6 – Distance between conductors on an interface between two layers 61
Figure 7 – Distance between adjacent conductors along an interface of two inner layers 62
Figure 8 – Distance between adjacent conductors located between the same two layers 63
Figure 9 – Detachable MAINS supply cords and connections 73
Figure 10 – Impact test using a sphere 86
Figure 11 – Flow chart to explain the requirements for protection against the spread of fire 88
Figure 12 – Baffle 91
Figure 13 – Area of the bottom of an ENCLOSURE to be constructed as specified in 9.3.2 c) 1) 91
Figure 14 – Ball-pressure test apparatus 102
Figure 16 – Ratio between test pressure and maximum working pressure 106
Figure 15 – Flow chart for conformity options 14.1 a), b), c) and d) 113
Figure A.1 – Measuring circuit for a.c. with frequencies up to 1 MHz and for d.c. 121
Figure A.2 – Measuring circuits for sinusoidal a.c. with frequencies up to 100 Hz and for d.c. 122
Figure A.3 – Current measuring circuit for electrical burns 123
Figure A.4 – Current measuring circuit for wet contact 123
Figure B.1 – Rigid test finger 124
Figure B.2 – Jointed test finger 125
Figure C.1 – Examples of methods of measuring CLEARANCES and CREEPAGE DISTANCES 129
Figures D.1a) to d) – Protection between HAZARDOUS LIVE circuits and ACCESSIBLE parts 131
Figures D.1e) to h) – Protection between HAZARDOUS LIVE circuits and circuits with ACCESSIBLE external TERMINALS 131
Figures D.2 a) and D.2 b) – Protection between a HAZARDOUS LIVE internal circuit and an ACCESSIBLE part which is not bonded to other ACCESSIBLE parts 132
Figures D.2 c) and D.2 d) – Protection between a HAZARDOUS LIVE primary circuit and circuits which have ACCESSIBLE external TERMINALS 132
Figure D.3 – Protection of external ACCESSIBLE TERMINALS of two HAZARDOUS LIVE circuits 132
Figure G.1 – Conformity verification process (see G.2) 137

AVA Documents
Document Sharing Hub
Full document details: IEC 61010-2-030 2023 EXV

Figure H.1 – Test sequence and conformity 143
Figure J.1 – Iterative process of RISK assessment and RISK reduction 146
Figure J.2 – RISK reduction 147
Figure K.1 – Distance between conductors on an interface between two layers 153
Figure K.2 – Distance between adjacent conductors along an interface of an inner layer 154
Figure K.3 – Distance between adjacent conductors located between the same two layers 155
Figure K.4 – Example of recurring peak voltage 167
Figure K.101 – Test circuit for evaluation of TRANSIENT OVERVOLTAGE attenuation 170
Figure AA.1 – Example to identify the locations of MEASUREMENT CATEGORIES 179
Figure CC.1 – Recommended dimensions of 4 mm TERMINALS 185
Figure DD.1 – Requirements for CLEARANCE, CREEPAGE DISTANCE and solid insulation 188

Table 1 – Symbols 34
Table 2 – Tightening torque for binding screw assemblies 50
Table 101 – CLEARANCES for unmated measuring circuit TERMINALS 56
Table 3 – Multiplication factors for CLEARANCES of equipment RATED for operation at altitudes up to 5 000 m 58
TABLE 4 – CLEARANCES and CREEPAGE DISTANCES for MAINS CIRCUITS of OVERVOLTAGE CATEGORY II up to 300 V 60
Table 5 – Test voltages for solid insulation in MAINS CIRCUITS of OVERVOLTAGE CATEGORY II up to 300 V 61
Table 6 – CLEARANCES and test voltages for secondary circuits derived from MAINS CIRCUITS of OVERVOLTAGE CATEGORY II up to 300 V 65
Table 7 – CREEPAGE DISTANCES for secondary circuits 66
Table 8 – Minimum values for distance or thickness (see 6.7.3.4.2 to 6.7.3.4.4) 68
Table 9 – Distances between TERMINALS and foil 69
Table 10 – Correction factors according to test site altitude for test voltages for CLEARANCES 70
Table 11 – Values for physical tests on cord anchorages 74
Table 12 – Protective measures against mechanical HAZARDS to body parts 79
Table 13 – Minimum maintained gaps to prevent crushing for different body parts 81
Table 14 – Maximum gaps to prevent access for different body parts 81
Table 15 – Impact energy levels, test height and corresponding IK codes 86
Table 16 – Acceptable perforation of the bottom of an ENCLOSURE 90
Table 17 – Limits of maximum available current 92
Table 18 – Values for overcurrent protection devices 93
Table 19 – Surface temperature limits in NORMAL CONDITION 99
Table 20 – Maximum temperatures for insulation material of windings 99
Table 22 – Lamp or lamp systems considered photobiologically safe 109
Table 23 – Lamp or lamp systems considered photobiologically safe under certain conditions 109
Table 21 – Impulse voltages for OVERVOLTAGECATEGORY II 115
Table C.1 – Dimensions of X 126

AVA Documents
Document Sharing Hub

Full document details: IEC 61010-2-030 2023 EXV

Table E.1 – Environmental situations ... 133
Table E.2 – Reduction of POLLUTION DEGREES ... 133
Table F.1 – Test voltages for ROUTINE TESTS of MAINS CIRCUITS ... 135
Table G.1 – Test pressures for equipment with pressures above 14 Mpa ... 139
Table H.1 – Test parameters, test conditions and test procedures ... 142
Table I.1 – Line-to-neutral voltages for common MAINS supply systems ... 144
Table J.1 – Severity of harm ... 148
Table J.2 – Probability of harm ... 148
Table J.3 – RISK category ... 148
Table K.1 – Multiplication factors for CLEARANCES for equipment RATED for operation at altitudes up to 5 000 m ... 150
Table K.2 – CLEARANCES and CREEPAGE DISTANCES for MAINS CIRCUITS of OVERVOLTAGE CATEGORY II above 300 V ... 150
Table K.3 – CLEARANCES and CREEPAGE DISTANCES for MAINS CIRCUITS of OVERVOLTAGE CATEGORY III ... 151
Table K.4 – CLEARANCES and CREEPAGE DISTANCES for MAINS CIRCUITS of OVERVOLTAGE CATEGORY IV ... 151
Table K.5 – Test voltages for solid insulation in MAINS CIRCUITS of OVERVOLTAGE CATEGORY II above 300 V ... 152
Table K.6 – Test voltages for solid insulation in MAINS CIRCUITS of OVERVOLTAGE CATEGORY III ... 152
Table K.7 – Test voltages for solid insulation in MAINS CIRCUITS of OVERVOLTAGE CATEGORY IV ... 152
Table K.8 – Test voltages for testing long-term stress of solid insulation in MAINS CIRCUITS ... 153
Table K.9 – Minimum values for distance or thickness of solid insulation ... 154
Table K.10 – CLEARANCES and test voltages for secondary circuits derived from MAINS CIRCUITS of OVERVOLTAGE CATEGORY II above 300 V ... 157
Table K.11 – CLEARANCES and test voltages for secondary circuits derived from MAINS CIRCUITS of OVERVOLTAGE CATEGORY III ... 158
Table K.12 – CLEARANCES and test voltages for secondary circuits derived from MAINS CIRCUITS of OVERVOLTAGE CATEGORY IV ... 159
Table K.13 – CREEPAGE DISTANCES for secondary circuits ... 160
Table K.14 – Minimum values for distance or thickness (see K.2.4.2 to K.2.4.4) ... 162
Table K.15 – CLEARANCE values for the calculation of K.3.2 ... 165
Table K.16 – Test voltages based on CLEARANCES ... 165
Table K.17 – CLEARANCES for BASIC INSULATION in circuits having recurring peak voltages or WORKING VOLTAGES with frequencies above 30 kHz ... 168
Table K.101 – Impulse voltages for circuits connected to MAINS ... 170
Table K.102 – CLEARANCES for measuring circuits RATED for MEASUREMENT CATEGORIES ... 171
Table K.103 – Impulse test voltages for testing electric strength of solid insulation for measuring circuits RATED for MEASUREMENT CATEGORIES ... 172
Table K.104 – a.c. test voltages for testing electric strength of solid insulation for measuring circuits RATED for MEASUREMENT CATEGORIES ... 173
Table K.105 – Minimum values for distance or thickness of solid insulation for measuring circuits RATED for MEASUREMENT CATEGORIES ... 174
Table AA.1 – Characteristics of MEASUREMENT CATEGORIES ... 180
Table EE.1 – CLEARANCE values for Table 101 ... 189

AVA Documents
Document Sharing Hub
Full document details: IEC 61010-2-030 2023 EXV

INTERNATIONAL ELECTROTECHNICAL COMMISSION

SAFETY REQUIREMENTS FOR ELECTRICAL EQUIPMENT FOR MEASUREMENT, CONTROL, AND LABORATORY USE –

Part 1: General requirements

FOREWORD

1) The International Electrotechnical Commission (IEC) is a worldwide organization for standardization comprising all national electrotechnical committees (IEC National Committees). The object of IEC is to promote international co-operation on all questions concerning standardization in the electrical and electronic fields. To this end and in addition to other activities, IEC publishes International Standards, Technical Specifications, Technical Reports, Publicly Available Specifications (PAS) and Guides (hereafter referred to as "IEC Publication(s)"). Their preparation is entrusted to technical committees; any IEC National Committee interested in the subject dealt with may participate in this preparatory work. International, governmental and non-governmental organizations liaising with the IEC also participate in this preparation. IEC collaborates closely with the International Organization for Standardization (ISO) in accordance with conditions determined by agreement between the two organizations.
2) The formal decisions or agreements of IEC on technical matters express, as nearly as possible, an international consensus of opinion on the relevant subjects since each technical committee has representation from all interested IEC National Committees.
3) IEC Publications have the form of recommendations for international use and are accepted by IEC National Committees in that sense. While all reasonable efforts are made to ensure that the technical content of IEC Publications is accurate, IEC cannot be held responsible for the way in which they are used or for any misinterpretation by any end user.
4) In order to promote international uniformity, IEC National Committees undertake to apply IEC Publications transparently to the maximum extent possible in their national and regional publications. Any divergence between any IEC Publication and the corresponding national or regional publication shall be clearly indicated in the latter.
5) IEC itself does not provide any attestation of conformity. Independent certification bodies provide conformity assessment services and, in some areas, access to IEC marks of conformity. IEC is not responsible for any services carried out by independent certification bodies.
6) All users should ensure that they have the latest edition of this publication.
7) No liability shall attach to IEC or its directors, employees, servants or agents including individual experts and members of its technical committees and IEC National Committees for any personal injury, property damage or other damage of any nature whatsoever, whether direct or indirect, or for costs (including legal fees) and expenses arising out of the publication, use of, or reliance upon, this IEC Publication or any other IEC Publications.
8) Attention is drawn to the Normative references cited in this publication. Use of the referenced publications is indispensable for the correct application of this publication.
9) Attention is drawn to the possibility that some of the elements of this IEC Publication may be the subject of patent rights. IEC shall not be held responsible for identifying any or all such patent rights.

This extended version (EXV) of the official IEC Standard provides the user with the comprehensive content of the Standard.

IEC 61010-2-030:2023 EXV includes the content of IEC 61010-2-030:2023, and the references made to IEC 61010-1:2010 and IEC 61010-1:2010/AMD1:2016.

The specific content of IEC 61010-2-030:2023 is displayed on a blue background.

Documents
Document Sharing Hub

Full document details: IEC 61010-2-030 2023 EXV

IEC 61010-2-030 has been prepared by IEC technical committee 66: Safety of measuring, control and laboratory equipment. It is an International Standard.

It has the status of a group safety publication in accordance with IEC Guide 104.

This third edition cancels and replaces the second edition published in 2017. This edition constitutes a technical revision.

This edition includes the following significant technical changes with respect to the previous edition:

a) in 1.2.1, requirements for protection against HAZARDS which could occur from reading a voltage have been added to the scope;

b) Clause 2, all normative references have been dated and new normative references have been added;

c) in 4.3.2.5, requirements for power supply have been modified;

d) in 4.3.2.6, requirements for inputs/outputs have been modified;

e) in 4.4.2.101, a new subclause about surge protective devices has been added;

f) in 5.1.5.101.2, minimum RATINGS for voltage of measuring TERMINALS are required;

g) Subclause 6.6.101 modifies 6.6.101 and 6.6.102 of previous edition:

   1) in 6.6.101.1, insulating material of group I may be allowed for determination of CREEPAGE DISTANCES of measuring circuit TERMINALS;

   2) In 6.6.101.2, CLEARANCES and CREEPAGE DISTANCES up to 3 000 V for measuring circuit TERMINALS in unmated position have been defined;

   3) in 6.6.101.3, requirements for measuring circuit TERMINALS in partially mated position have been specified;

   4) in 6.6.101.4, requirements for measuring circuit TERMINALS in mated position have been specified;

   5) Subclause 6.6.101.5 replaces 6.6.102;

h) Subclause 9.101 to consider the protection of measuring circuits against the spread of fire and arc flash has been added and Table 102 has been replaced by Table K.101;

i) in 9.101.2, relocation of 101.3 of previous edition;

j) in 9.101.3, relocation of 101.4 of previous edition, extension to MEASUREMENT CATEGORY II and reference to IEC 61000-4-5 for tests;

k) in 14.101, relocation of 14.102 and 14.101 of previous edition has been removed;

l) in 101.3, relocation of 101.5 of previous edition, and more requirements added against HAZARD occurring from reading a voltage value;

m) in K.2.1, another method for determination of CLEARANCES of secondary circuits is proposed;

n) in K.3.2, new Table K.15 and Table K.16 for CLEARANCE calculation;

o) in K.101.4.1, new Table K.103 and Table K.104 replace Table K.102, Table K.103 and Table K.104;

p) in K.101.4, the subclause has been reviewed; Tables and tests for solid insulation have been modified; Table K.105 replaces Table K.9;

q) Table K.101, replacement of Table K.106;

r) Clause K.4, redraft of the clause to propose a method for determination of U_t for circuits which reduce TRANSIENT OVERVOLTAGES;

s) Annex AA: Figure AA.1 has been redesigned;

t) Annex EE: addition of a new informative annex for determination of CLEARANCES for Table 101.

AVA Documents
Document Sharing Hub

Full document details: IEC 61010-2-030 2023 EXV

The text of this International Standard is based on the following documents:

Draft	Report on voting
66/786/FDIS	66/796/RVD

Full information on the voting for its approval can be found in the report on voting indicated in the above table.

The language used for the development of this International Standard is English.

This document was drafted in accordance with ISO/IEC Directives, Part 2, and developed in accordance with ISO/IEC Directives, Part 1 and ISO/IEC Directives, IEC Supplement, available at www.iec.ch/members_experts/refdocs. The main document types developed by IEC are described in greater detail at www.iec.ch/publications.

A list of all parts of the IEC 61010 series, under the general title *Safety requirements for electrical equipment for measurement, control, and laboratory use*, can be found on the IEC website.

This document is to be used in conjunction with IEC 61010-1:2010 and IEC 61010-1:2010/AMD1:2016.

This document supplements or modifies the corresponding clauses in IEC 61010-1 so as to convert that publication into the IEC standard: *Particular requirements for equipment having testing or measuring circuits.*

Where a particular subclause of IEC 61010-1 is not mentioned in this document, that subclause applies as far as is reasonable. Where this document states "addition", "modification", "replacement", or "deletion", the relevant requirement, test specification or note in IEC 61010-1 should be adapted accordingly.

In this standard:

- the following print types are used:
  - requirements: in roman type;
  - NOTES: in small roman type;
  - *conformity and tests: in italic type;*
  - terms used throughout this standard which have been defined in Clause 3: SMALL ROMAN CAPITALS;
- subclauses, figures, tables and notes which are additional to those in IEC 61010-1 are numbered starting from 101. Additional annexes are lettered starting from AA and additional list items are lettered from aa).

Documents
Document Sharing Hub

Full document details: IEC 61010-2-030 2023 EXV

The committee has decided that the contents of this document will remain unchanged until the stability date indicated on the IEC website under webstore.iec.ch in the data related to the specific document. At this date, the document will be

- reconfirmed,
- withdrawn,
- replaced by a revised edition, or
- amended.

IMPORTANT – The "colour inside" logo on the cover page of this document indicates that it contains colours which are considered to be useful for the correct understanding of its contents. Users should therefore print this document using a colour printer.

Documents
Document Sharing Hub

Full document details: IEC 61010-2-030 2023 EXV

INTRODUCTION to IEC 61010-1:2010 and IEC 61010-1:2010/AMD1:2016

This Interational Standard specifies the safety requirements that are generally applicable to all equipment within its scope. For certain types of equipment, these requirements will be supplemented or modified by the special requirements of one, or more than one, particular part 2 of the standard which must be read in conjunction with the part 1 requirements.

Documents
Document Sharing Hub
Full document details: IEC 61010-2-030 2023 EXV

INTRODUCTION

IEC 61010-1 specifies the safety requirements that are generally applicable to all equipment within its scope. For certain types of equipment, the requirements of IEC 61010-1 and its amendment will be supplemented or modified by the special requirements of one or more standard from the IEC 61010-2 series which is/are read in conjunction with the requirements of IEC 61010-1.

1) This document specifies the safety requirements for equipment with testing or measuring circuits which are connected for test or measurement purposes to devices or circuits outside the measurement equipment itself.

2) IEC 61010-2-032:2023 specifies the safety requirements for hand-held and hand-manipulated current sensors for measuring, detecting, injecting current, or indicating current waveforms on circuits without physically opening the current path of the circuit being measured.

   Most of the requirements of this document have been included in IEC 61010-2-032:2023. Equipment within the scopes of both this document and IEC 61010-2-032:2023 is considered to be covered by the requirements of IEC 61010-2-032:2023.

   However, for current sensors in combined equipment with protective bonding and automatic disconnection of the supply, this document and IEC 61010-2-032:2023 are read in conjunction.

3) IEC 61010-2-033:2023 specifies the safety requirements for hand-held multimeters and other meters for domestic and professional use, capable of measuring mains voltage, intended to measure voltage and other electrical quantities such as resistance or current.

   All relevant requirements of this document have been included in IEC 61010-2-033:2023.

4) IEC 61010-2-034:2023 specifies the safety requirements for measurement equipment for insulation resistance and test equipment for electric strength which are connected to units, lines or circuits for test or measurement purposes.

   All relevant requirements of this document have been included in IEC 61010-2-034:2023. However, for equipment within the scope of IEC 61010-2-032:2023 and IEC 61010-2-034:2023, these standards are read in conjunction.

IEC 61010-031 specifies the safety requirements for hand-held and hand-manipulated probe assemblies and their related accessories intended to be used in particular with equipment in the scope of this document, IEC 61010-2-032, IEC 61010-2-033 and IEC 61010-2-034. These probe assemblies are for non-contact or direct electrical connection between a part and electrical test and measurement equipment. They may be fixed to the equipment or be detachable accessories for the equipment.

Documents
Document Sharing Hub

Full document details: IEC 61010-2-030 2023 EXV

SAFETY REQUIREMENTS FOR ELECTRICAL EQUIPMENT FOR MEASUREMENT, CONTROL, AND LABORATORY USE –

Part 1: General requirements

1 Scope and object

1.1 Scope

1.1.1 Equipment included in scope

This document specifies safety requirements for equipment having testing or measuring circuits which are connected for test or measurement purposes to devices or circuits outside the measurement equipment itself.

These include measuring circuits which are part of electrical test and measurement equipment, laboratory equipment, or process control equipment. These circuits in equipment have additional protective means between the circuit and an OPERATOR.

NOTE These testing and measuring circuits can, for example:

– measure voltages in circuits of other equipment,

– measure temperature of a separate device via a thermocouple,

– measure force on a separate device via a strain gauge,

– inject a voltage or current onto a circuit to analyse or test a new design.

This group safety publication focusing on safety essential requirements is primarily intended to be used as a product safety standard for the products mentioned in the scope, but is also intended to be used by technical committees in the preparation of publications for products similar to those mentioned in the scope of this document, in accordance with the principles laid down in IEC Guide 104 and ISO/IEC Guide 51.

One of the responsibilities of a technical committee is, wherever applicable, to make use of basic safety publications and/or group safety publications in the preparation of its publications.

1.1.2 Equipment excluded from scope

This standard does not apply to equipment within the scope of:

a) IEC 60065 (Audio, video and similar electronic apparatus);

b) IEC 60204 (Safety of machinery – Electrical equipment of machines);

c) IEC 60335 (Household and similar electrical appliances);

d) IEC 60364 (Electrical installations of buildings);

e) IEC 60439 (Low-voltage switchgear and controlgear assemblies);

f) IEC 60601 (Medical electrical equipment);

g) IEC 60950 (Information technology equipment including electrical business equipment, except as specified in 1.1.3);

h) IEC 61558 (Power transformers, power supply units and similar);

i) IEC 61010-031 (Hand-held probe assemblies);

j) IEC 61243-3 (Live working – Voltage detectors – Part 3: Two-pole low-voltage type).

AVA Documents
Document Sharing Hub

Full document details: IEC 61010-2-030 2023 EXV

1.1.3 Computing equipment

This standard applies only to computers, processors, etc. which form part of equipment within the scope of this standard or are designed for use exclusively with the equipment.

NOTE Computing devices and similar equipment within the scope of IEC 60950 and conforming to its requirements are considered to be suitable for use with equipment within the scope of this standard. However, some of the requirements of IEC 60950 for resistance to moisture and liquids are less stringent than those in this standard (see 5.4.4 second paragraph)).

1.2 Object

1.2.1 Aspects included in scope

The purpose of the requirements of this standard is to ensure that HAZARDS to the OPERATOR and the surrounding area are reduced to a tolerable level.

Requirements for protection against particular types of HAZARD are given in Clauses 6 to 13, as follows:

a) electric shock or burn (see Clause 6);

b) mechanical HAZARDS (see Clauses 7 and 8);

c) spread of fire or arc flash from the equipment (see Clause 9);

d) excessive temperature (see Clause 10);

e) effects of fluids and fluid pressure (see Clause 11);

f) effects of radiation, including lasers sources, and sonic and ultrasonic pressure (see Clause 12);

g) liberated gases, explosion and implosion (see Clause 13).

Requirements for protection against HAZARDS arising from NORMAL USE, REASONABLY FORESEEABLE MISUSE and ergonomic factors are specified in Clause 16 and Clause 101.

Annex BB provides guidance to equipment manufacturers on HAZARDS that should be considered for equipment intended for performing tests and measurements on hazardous conductors, including MAINS conductors and telecommunication network conductors.

RISK assessment for HAZARDS or environments not fully covered above is specified in Clause 17.

NOTE Attention is drawn to the existence of additional requirements regarding the health and safety of labour forces.

1.2.2 Aspects excluded from scope

This standard does not cover:

a) reliable function, performance, or other properties of the equipment not related to safety;

b) effectiveness of transport packaging;

c) EMC requirements (see the IEC 61326 series);

d) protective measures for explosive atmospheres (see the IEC 60079 series).

1.3 Verification

This standard also specifies methods of verifying that the equipment meets the requirements of this standard, through inspection, TYPE TESTS, ROUTINE TESTS, and RISK assessment.

Documents
Document Sharing Hub
Full document details: IEC 61010-2-030 2023 EXV

1.4 Environmental conditions

1.4.1 Normal environmental conditions

This standard applies to equipment designed to be safe at least under the following conditions:

a) indoor use;

b) altitude up to 2 000 m;

c) temperature 5 °C to 40 °C;

d) maximum relative humidity 80 % for temperatures up to 31 °C decreasing linearly to 50 % relative humidity at 40 °C;

e) MAINS supply voltage fluctuations up to ±10 % of the nominal voltage;

f) TRANSIENT OVERVOLTAGES up to the levels of OVERVOLTAGE CATEGORY II;

NOTE 1 These levels of transient overvoltage are typical for equipment supplied from the building wiring.

g) TEMPORARY OVERVOLTAGES occurring on the MAINS supply.

h) applicable POLLUTION DEGREE of the intended environment (POLLUTION DEGREE 2 in most cases).

NOTE 2 Manufacturers may specify more restricted environmental conditions for operation; nevertheless the equipment must be safe within these normal environmental conditions.

1.4.2 Extended environmental conditions

This standard applies to equipment designed to be safe not only in the environmental conditions specified in 1.4.1, but also in any of the following conditions as RATED by the manufacturer of the equipment:

a) outdoor use;

b) altitude above 2 000 m;

c) ambient temperatures below 5 °C or above 40 °C;

d) relative humidity above the levels specified in 1.4.1;

e) MAINS supply voltage fluctuations exceeding ±10 % of the nominal voltage;

f) WET LOCATION;

g) TRANSIENT OVERVOLTAGES up to the levels of OVERVOLTAGE CATEGORY III or IV (see Annex K).

2 Normative references

The following referenced documents, where applicable, are indispensable for the application of this document. For dated references, only the edition cited applies. For undated references, the latest edition of the referenced document (including any amendments) applies.

IEC 60027 (all parts), *Letter symbols to be used in electrical technology*

IEC 60065, *Audio, video and similar electronic apparatus – Safety requirements*

IEC 60068-2-14, *Environmental testing – Part 2-14: Tests – Test N: Change of temperature*

IEC 60068-2-75, *Environmental testing – Part 2-75: Tests – Test Eh: Hammer tests*

IEC 60073, *Basic and safety principles for man-machine interface, marking and identification – Coding principles for indicators and actuators*

Documents
Document Sharing Hub

Full document details: IEC 61010-2-030 2023 EXV

IEC 60227 (all parts), *Polyvinyl chloride insulated cables of rated voltages up to and including 450/750 V*

IEC 60245 (all parts), *Rubber insulated cables – Rated voltages up to and including 450/750 V*

IEC 60309 (all parts), *Plugs, socket-outlets and couplers for industrial purposes*

IEC 60320 (all parts), *Appliance couplers for household and similar general purposes*

IEC 60332-1-2, *Tests on electric and optical fibre cables under fire conditions – Part 1-2: Test for vertical flame propagation for a single insulated wire or cable – Procedure for 1 kW pre-mixed flame*

IEC 60332-2-2, *Tests on electric and optical fibre cables under fire conditions – Part 2-2: Test for vertical flame propagation for a single small insulated wire or cable – Procedure for diffustion flame*

IEC 60335-2-24, *Household and similar electrical appliances – Safety – Part 2-24: Particular requirements for refrigerating appliances, ice-cream appliances and ice-makers.*

IEC 60335-2-89, *Household and similar electrical appliances – Safety – Part 2-89: Particular requirements for commercial refrigerating appliances with an incorporated or remote refrigerant condensing unit or compressor*

IEC 60364-4-44:2007, *Low-voltage electrical installations – Part 4-44: Protection for safety – Protection against voltage disturbances and electromagnetic disturbances*
IEC 60364-4-44:2007/AMD1:2015
IEC 60364-4-44:2007/AMD2:2018

IEC 60417, *Graphical symbols for use on equipment*

IEC 60529, *Degrees of protection provided by enclosures (IP Code)*

IEC 60664-3, *Insulation coordination for equipment within low-voltage systems – Part 3: Use of coating, potting or moulding for protection against pollution*

IEC 60695-11-10, *Fire hazard testing – Part 11-10: Test flames – 50 W horizontal and vertical flame test methods*

IEC 60799, *Electrical accessories – Cord sets and interconnection cord sets*

IEC 60825-1, *Safety of laser products – Part 1: Equipment classification and requirements*

IEC 60947-1, *Low-voltage switchgear and controlgear – Part 1: General rules*

IEC 60947-2, *Low-voltage switchgear and controlgear – Part 2: Circuit-breakers*

IEC 60947-3, *Low-voltage switchgear and controlgear – Part 3: Switches, disconnectors, switch-disconnectors and fuse-combination units*

IEC 61000-4-5:2014:2017, *Electromagnetic compatibility (EMC) – Part 4-5: Testing and measurement techniques – Surge immunity test*
IEC 61000-4-5:2014/AMD1:2017

Documents
Document Sharing Hub

Full document details: IEC 61010-2-030 2023 EXV

IEC 61010-031:2022, *Safety requirements for electrical equipment for measurement, control, and laboratory use – Part 031: Safety requirements for hand-held and hand-manipulated probe assemblies for electrical test and measurement*

IEC 61010-2-032:2023, *Safety requirements for electrical equipment for measurement, control, and laboratory use – Part 2-032: Particular requirements for hand-held and hand-manipulated current sensors for electrical test and measurement*

IEC 61180:2016, *High-voltage test techniques for low-voltage equipment – Definitions, test and procedure requirements, test equipment*[1]

IEC 61672-1, *Electroacoustics – Sound level meters – Part 1: Specifications*

IEC 61672-2, *Electroacoustics – Sound level meters – Part 2: Pattern evaluation tests*

IEC 62262, *Degrees of protection provided by enclosures for electrical equipment against external impacts (IK code)*

IEC 62471, *Photobiological safety of lamps and lamp systems*

IEC TR 62471-2, *Photobiological safety of lamps and lamp systems – Part 2: Guidance on manufacturing requirements relating to non-laser optical radiation safety*

IEC 62598, *Nuclear instrumentation – Constructional requirements and classification of radiometric gauges*

IEC Guide 104, *The preparation of safety publications and the use of basic safety publications and group safety publications*

ISO/IEC Guide 51, *Safety aspects – Guidelines for their inclusion in standards*

ISO 306:2013, *Plastics – Thermoplastic materials – Determination of Vicat softening temperature (VST)*

ISO 361, *Basic ionizing radiation symbol*

ISO 3746, *Acoustics – Determination of sound power levels of noise sources using sound pressure – Survey method using an enveloping measurement surface over a reflecting plane*

ISO 7000, *Graphical symbols for use on equipment*

ISO 9614-1, *Acoustics – Determination of sound power levels of noise sources using sound intensity – Part 1: Measurement at discrete points*

ISO 13857, *Safety of machinery – Safety distances to prevent hazard zones being reached by upper and lower limbs*

EN 378-2, *Refrigerating systems and heat pumps – Safety and environmental requirements. Design, construction, testing, marking and documentation*

---

1 *IEC 61180:2016 replaces everywhere IEC 61180, IEC 61180-1 and IEC 61180-2 are referenced in IEC 61010-1.*

AVA Documents
Document Sharing Hub

Full document details: IEC 61010-2-030 2023 EXV

3 Terms and definitions

For the purposes of this document, the following terms and definitions apply.

3.1 Equipment and states of equipment

3.1.1
FIXED EQUIPMENT
equipment fastened to a support, or otherwise secured in a specific location

[IEC 60050-826:2004, 826-16-07, modified]

3.1.2
PERMANENTLY CONNECTED EQUIPMENT
equipment that is electrically connected to a supply by means of a permanent connection which can be detached only by the use of a TOOL

3.1.3
PORTABLE EQUIPMENT
equipment intended to be carried by hand

3.1.4
HAND-HELD EQUIPMENT
PORTABLE EQUIPMENT intended to be supported by one hand during NORMAL USE

3.1.5
TOOL
external device, including keys and coins, used to aid a person to perform a mechanical function

3.1.6
DIRECT PLUG-IN EQUIPMENT
equipment with a MAINS plug that is attached to the equipment housing without the use of a MAINS supply cord so that the equipment is supported by the MAINS socket-outlet

3.2 Parts and accessories

3.2.1
TERMINAL
component provided for the connection of a device to external conductors

[IEC 60050-151:2001, 151-12-12, modified]

NOTE TERMINALS can contain one or several contacts and the term therefore includes sockets, connectors, etc.

3.2.2
FUNCTIONAL EARTH TERMINAL
TERMINAL by which electrical connection is made directly to a point of a measuring or control circuit or to a screening part and which is intended to be earthed for any functional purpose other than safety

NOTE For measuring equipment, this TERMINAL is often called the measuring earth TERMINAL.

3.2.3
PROTECTIVE CONDUCTOR TERMINAL
TERMINAL which is bonded to conductive parts of equipment for safety purposes and is intended to be connected to an external protective earthing system

Documents
Document Sharing Hub
Full document details: IEC 61010-2-030 2023 EXV

3.2.4
ENCLOSURE
part providing protection of equipment against certain external influences and, in any direction, protection against direct contact

NOTE ENCLOSURES may also provide protection against the spread of fire (see 9.3.2 c)).

3.2.5
PROTECTIVE BARRIER
part providing protection against direct contact from any usual direction of access

[IEC 60050-195:1998, 195-06-15]

NOTE Depending on its construction, a PROTECTIVE BARRIER can be called a casing, cover, screen, door, guard, etc.

A PROTECTIVE BARRIER can act alone; it is then only effective when it is in place. A PROTECTIVE BARRIER can also act in conjunction with an interlocking device with or without guard locking; in this case, protection is ensured whatever the position of the PROTECTIVE BARRIER.

3.3 Quantities

3.3.1
RATED (value)
quantity value assigned, generally by a manufacturer, for a specified operating condition of a component, device or equipment

[IEC 60050-151:2001, 151-16-08, modified]

3.3.2
RATING
set of RATED values and operating conditions

[IEC 60050-151:2001, 151-16-11]

3.3.3
WORKING VOLTAGE
highest r.m.s. value of the a.c. or d.c. voltage across any particular insulation which can occur when the equipment is supplied at RATED voltage

NOTE 1 Transients and voltage fluctuations are not considered to be part of the WORKING VOLTAGE.

NOTE 2 Both open-circuit conditions and normal operating conditions are taken into account.

3.4 Tests

3.4.1
TYPE TEST
test of one or more samples of equipment (or parts of equipment) made to a particular design, to show that the design and construction meet one or more requirements of this standard

NOTE This is an amplification of the IEC 60050-151:2001, 151-16-16 definition to cover design as well as construction.

3.4.2
ROUTINE TEST
conformity test made on each individual item during or after manufacture

[IEC 60050-151:2001, 151-16-17]

Documents
Document Sharing Hub
Full document details: IEC 61010-2-030 2023 EXV

3.5 Safety terms

3.5.1
ACCESSIBLE (of a part)
able to be touched with a standard test finger or test pin, when used as specified in 6.2

3.5.2
HAZARD
potential source of harm

3.5.3
HAZARDOUS LIVE
capable of rendering an electric shock or electric burn

3.5.4
MAINS
electricity supply system

3.5.5
MAINS CIRCUIT
circuit which is intended to be directly connected to the MAINS for the purpose of powering the equipment

3.5.6
PROTECTIVE IMPEDANCE
component or assembly of components whose impedance, construction and reliability are suitable to provide protection against electric shock

3.5.7
PROTECTIVE BONDING
electrical connection of ACCESSIBLE conductive parts or protective screening to provide electrical continuity to the means for connection of an external protective conductor

3.5.8
NORMAL USE
operation, including stand-by, according to the instructions for use or for the obvious intended purpose

3.5.9
NORMAL CONDITION
condition in which all means for protection against HAZARDS are intact

3.5.10
SINGLE FAULT CONDITION
condition in which one means for protection against HAZARD is defective or one fault is present which could cause a HAZARD

NOTE If a SINGLE FAULT CONDITION results unavoidably in one or more other fault conditions, all the failures are considered as one SINGLE FAULT CONDITION [IEC Guide 104].

3.5.11
OPERATOR
person operating equipment for its intended purpose

3.5.12
RESPONSIBLE BODY
individual or group responsible for the safe use and maintenance of equipment

Documents
Document Sharing Hub
Full document details: IEC 61010-2-030 2023 EXV

3.5.13
WET LOCATION
location where water or another conductive liquid may be present and is likely to cause reduced human body impedance due to wetting of the contact between the human body and the equipment, or wetting of the contact between the human body and the environment

3.5.14
REASONABLY FORESEEABLE MISUSE
use of a product in a way not intended by the supplier, but which may result from readily predictable human behaviour

3.5.15
RISK
combination of the probability of occurrence of harm and the severity of that harm

3.5.16
TOLERABLE RISK
RISK which is accepted in a given context based on the current values of society

[ISO/IEC Guide 51:1999, 3.7]

3.5.17
OVERVOLTAGE CATEGORY
numeral defining a TRANSIENT OVERVOLTAGE condition (see Annex K)

3.5.18
TRANSIENT OVERVOLTAGE
short duration overvoltage of a few milliseconds or less, oscillatory or non-oscillatory, usually highly damped

[IEC 60050-604, Amendment 1:1998, 604-03-13]

3.5.19
TEMPORARY OVERVOLTAGE
power frequency overvoltage of relatively long duration

[IEC 60050-604, Amendment 1:1998, 604-03-12]

3.5.101
MEASUREMENT CATEGORY
classification of testing and measuring circuits according to the type of MAINS to which they are intended to be connected

3.6 Insulation

3.6.1
BASIC INSULATION
insulation of HAZARDOUS LIVE parts which provides basic protection

[IEC 60050-195:1998, 195-06-06]

NOTE BASIC INSULATION may serve also for functional purposes.

3.6.2
SUPPLEMENTARY INSULATION
independent insulation applied in addition to BASIC INSULATION in order to provide protection against electric shock in the event of a failure of BASIC INSULATION

[IEC 60050-195:1998, 195-06-07, modified]

AVA Documents
Document Sharing Hub

Full document details: IEC 61010-2-030 2023 EXV

3.6.3
DOUBLE INSULATION
insulation comprising both BASIC INSULATION and SUPPLEMENTARY INSULATION

[IEC 60050-195:1998, 195-06-08]

3.6.4
REINFORCED INSULATION
insulation which provides protection against electric shock not less than that provided by DOUBLE INSULATION

NOTE REINFORCED INSULATION may be composed of several layers which cannot be tested singly as SUPPLEMENTARY INSULATION or BASIC INSULATION.

[IEC 60050-195:1998, 195-06-09, modified]

3.6.5
POLLUTION
addition of foreign matter, solid, liquid or gaseous (ionized gases), that may produce a reduction of dielectric strength or surface resistivity

3.6.6
POLLUTION DEGREE
numeral indicating the level of POLLUTION that may be present in the environment

3.6.7
POLLUTION DEGREE 1
no POLLUTION or only dry, non-conductive POLLUTION occurs, which has no influence

3.6.8
POLLUTION DEGREE 2
only non-conductive POLLUTION occurs except that occasionally a temporary conductivity caused by condensation is expected

3.6.9
POLLUTION DEGREE 3
conductive POLLUTION occurs, or dry, non-conductive POLLUTION occurs which becomes conductive due to condensation which is expected

NOTE In such conditions, equipment is normally protected against exposure to direct sunlight, precipitation, and full wind pressure, but neither temperature nor humidity is controlled.

3.6.10
POLLUTION DEGREE 4
continuous conductivity occurs due to conductive dust, rain or other wet conditions

3.6.11
CLEARANCE
shortest distance in air between two conductive parts

3.6.12
CREEPAGE DISTANCE
shortest distance along the surface of a solid insulating material between two conductive parts

[IEC 60050-151:2001, 151-15-50]

AVA Documents
Document Sharing Hub

Full document details: IEC 61010-2-030 2023 EXV

4 Tests

4.1 General

Tests in this standard are TYPE TESTS to be carried out on samples of equipment or parts. Their only purpose is to check that the design and construction ensure conformity with this standard. In addition, manufacturers shall perform the ROUTINE TESTS of Annex F on 100 % of equipment produced which has both HAZARDOUS LIVE parts and ACCESSIBLE conductive parts.

The equipment shall at least meet the requirements of this standard. It is permissible to exceed the requirements. If, in this standard, a lower limit is specified for a conformity value, then the equipment may demonstrate a larger value. If an upper limit is specified for a conformity value, the equipment may demonstrate a lower value.

Tests on subassemblies that meet the requirements of the relevant standards specified in this standard, and used in accordance with them, need not be repeated during TYPE TESTS of the whole equipment.

Conformity with the requirements of this standard is checked by carrying out all applicable tests, except that a test may be omitted if examination of the equipment and design documentation demonstrates conclusively that the equipment would pass the test. Tests are carried out both under reference test conditions (see 4.3) and under fault conditions (see 4.4).

Where conformity statements in this standard require inspection, this may include examination of the equipment by measurement, examination of the markings on the equipment, examination of the instructions supplied with the equipment, examination of the data sheets of the materials or components from which the equipment is manufactured, etc. In each case, the inspection will either demonstrate that the equipment meets the applicable requirements, or will indicate that further testing is required.

Tests needed to support a RISK assessment (see Clause 17) are carried out in the combinations of conditions and operations determined during the RISK assessment.

If, when carrying out a conformity test, there is any uncertainty about the exact value of an applied or measured quantity (for example voltage) due to the tolerance:

a) manufacturers should ensure that at least the specified test value is applied;

b) test houses should ensure that no more than the specified test value is applied.

4.2 Sequence of tests

The sequence of tests is optional unless otherwise specified. The equipment under test shall be carefully inspected after each test. If the result of a test causes doubt whether any earlier tests would have been passed if the sequence had been reversed, these earlier tests shall be repeated.

4.3 Reference test conditions

4.3.1 Environmental conditions

Unless otherwise specified in this standard, the following environmental conditions shall exist in the test location:

a) a temperature of 15 °C to 35 °C;

b) a relative humidity of not more than 75 %, but not exceeding the limits of 1.4.1 d);

c) an air pressure of 75 kPa to 106 kPa;

d) no hoar-frost, dew, percolating water, rain, solar radiation, etc.

Documents
Document Sharing Hub

Full document details: IEC 61010-2-030 2023 EXV

4.3.2 State of equipment

4.3.2.1 General

Unless otherwise specified, each test shall be carried out on the equipment assembled for NORMAL USE and under the least favourable combination of the conditions given in 4.3.2.2 to 4.3.2.13.

NOTE In case of doubt, tests should be performed in more than one combination of conditions.

If dimensions or mass make it unsuitable to carry out particular tests on completely assembled equipment, tests on sub-assemblies are allowed, provided it is verified that the assembled equipment will meet the requirements of this standard.

4.3.2.2 Position of equipment

The equipment shall be in any position of NORMAL USE and with any ventilation unimpeded. Equipment intended to be built into a wall, recess, cabinet, etc., shall be installed as specified in the manufacturer's instructions.

4.3.2.3 Accessories

Accessories and OPERATOR-interchangeable parts available from, or recommended by, the manufacturer for use with the equipment under test shall be either connected or not connected.

4.3.2.4 Covers and removable parts

Covers or parts which can be removed without using a TOOL shall be removed or not removed.

4.3.2.5 Power supply

The following requirements apply:

a) the voltage of the power supply connected to the MAINS shall be between 90 % and 110 % of any RATED supply voltage for which the equipment can be set or, if the equipment is RATED for a greater fluctuation, at any supply voltage within the fluctuation range;

b) the MAINS frequency shall be any RATED frequency;

c) equipment for both a.c. and d.c. shall be connected to an a.c. or d.c. supply;

d) equipment powered from MAINS by single-phase a.c. shall be connected both with normal and reverse polarity;

e) if the means of connection permit reversal, battery-operated and d.c. equipment shall be connected with both reverse and normal polarity.

4.3.2.6 Input and output voltages or currents

Input and output voltages or currents, including floating voltages but excluding the supply voltage connected to the MAINS, shall be set to any voltage or current within their RATED range, in normal and reverse polarity if possible.

4.3.2.7 Earth TERMINALS

PROTECTIVE CONDUCTOR TERMINALS, if any, shall be connected to earth.

FUNCTIONAL EARTH TERMINALS shall be connected or not connected to earth.

Documents
Document Sharing Hub

Full document details: IEC 61010-2-030 2023 EXV

4.3.2.8 Controls

Controls which an OPERATOR can adjust without the use of a TOOL shall be set to any position except that:

a) MAINS selection devices shall be set to the correct value;

b) combinations of settings shall not be made if they are prohibited by the manufacturer's marking on the equipment.

4.3.2.9 Connections

The equipment shall be connected for NORMAL USE, or not connected.

4.3.2.10 Load on motors

Load conditions of motor-driven parts of equipment shall be in accordance with the NORMAL USE.

4.3.2.11 Output

For equipment giving an electrical output:

a) the equipment shall be operated in such a way as to provide the RATED output power to the RATED load;

b) the RATED load impedance of any output shall be connected or not connected.

4.3.2.12 Duty cycle

Equipment for short-term or intermittent operation shall be operated for the longest RATED period and shall have the shortest RATED recovery period consistent with the manufacturer's instructions.

Equipment for short-term or intermittent operation that develops significant heat during the startup phase, and that relies on continued operation to dissipate that heat, shall also be operated for the shortest RATED period followed by the shortest RATED recovery period.

4.3.2.13 Loading and filling

Equipment intended to be loaded with a specific material in NORMAL USE shall be loaded with the least favourable quantity of the materials specified in the instructions for use, including not loaded (empty) if the instructions for use permit this in NORMAL USE.

NOTE If the specified material could cause a HAZARD during test, another material may be used provided that it can be shown that the result of the test is not affected.

4.4 Testing in SINGLE FAULT CONDITION

4.4.1 General

The following requirements apply.

a) Examination of the equipment and its circuit diagram will generally show the fault conditions which are liable to result in HAZARDS and which, therefore, shall be applied.

b) Fault tests shall be made as specified for checking conformity, unless it can be demonstrated that no HAZARD could arise from a particular fault condition.

c) The equipment shall be operated under the least favourable combination of reference test conditions (see 4.3). These combinations may be different for different faults and they shall be recorded for each test. If the environmental limits of the reference test conditions (see 4.3) do not allow realistic assessment of SINGLE FAULT CONDITIONS, the test shall be conducted at the least favourable RATED environmental conditions of the equipment.

Documents
Document Sharing Hub

4.4.2 Application of fault conditions

4.4.2.1 General

Fault conditions shall include those specified in 4.4.2.2 to 4.4.2.14. They shall be applied only one at a time and shall be applied in turn in any convenient order. Multiple simultaneous faults shall not be applied unless they are a consequence of an applied fault.

NOTE For example, fans may be stopped one fan at a time unless they share a common power or control source. In that case, the common fans should be stopped simultaneously by interrupting the power or control source.

After each application of a fault condition, the equipment or part shall pass the applicable tests of 4.4.4.

4.4.2.2 PROTECTIVE IMPEDANCE

The following requirements apply.

a) If a PROTECTIVE IMPEDANCE is formed by a combination of components, each component shall be short-circuited or disconnected, whichever is less favourable.

b) If a PROTECTIVE IMPEDANCE is formed with a single component that meets the requirements of 6.5.4, it need not be short-circuited or disconnected.

4.4.2.3 Protective conductor

The protective conductor shall be interrupted, except for PERMANENTLY CONNECTED EQUIPMENT and equipment utilizing a connector meeting the requirements of IEC 60309.

4.4.2.4 Equipment or parts for short-term or intermittent operation

These shall be operated continuously if continuous operation could occur in a SINGLE FAULT CONDITION. Individual parts may include motors, relays, other electromagnetic devices and heaters.

4.4.2.5 Motors

Motors shall be stopped while fully energized or prevented from starting, whichever is less favourable.

One supply phase of any multi-phase motor shall be interrupted while the motor is operating at its intended full load.

4.4.2.6 Capacitors

Capacitors (except for self-healing capacitors) in the auxiliary winding circuits of motors shall be short-circuited.

4.4.2.7 MAINS transformers

4.4.2.7.1 General

The secondary windings of MAINS transformers shall be short-circuited as specified in 4.4.2.7.2, and overloaded as specified in 4.4.2.7.3.

A transformer damaged during one test may be repaired or replaced before the next test.

Tests for MAINS transformers tested as separate components are specified in 14.6.

Documents
Document Sharing Hub
Full document details: IEC 61010-2-030 2023 EXV

4.4.2.7.2 Short circuit

Each untapped output winding, and each section of a tapped output winding, which is loaded in NORMAL USE, shall be tested in turn, one at a time, to simulate short circuits in the load. Overcurrent protection devices remain fitted during the test. All other windings are loaded or not loaded, whichever load condition of NORMAL USE is less favourable.

4.4.2.7.3 Overload

Each untapped output winding, and each section of a tapped output winding, is overloaded in turn one at a time. The other windings are loaded or not loaded, whichever load condition of NORMAL USE is less favourable. If any overloads arise from testing in the fault conditions of 4.4, secondary windings shall be subjected to those overloads.

Overloading is carried out by connecting a variable resistor across the winding. The resistor is adjusted as quickly as possible and readjusted, if necessary, after 1 min to maintain the applicable overload. No further readjustments are then permitted.

If overcurrent protection is provided by a current-breaking device, the overload test current is the maximum current which the overcurrent protection device is just capable of passing for 1 h. Before the test, the device is replaced by a link with negligible impedance. If this value cannot be derived from the specification, it is to be established by test.

For equipment in which the output voltage is designed to collapse when a specified overload current is reached, the overload is slowly increased to a point just before the point which causes the output voltage to collapse.

In all other cases, the loading is the maximum power output obtainable from the transformer.

Transformers with overtemperature protection which meets the requirements of 14.3 during the short-circuit test of 4.4.2.7.2 need not be subjected to overload tests.

4.4.2.8 Outputs

Outputs shall be short-circuited one at a time.

4.4.2.9 Equipment for more than one supply

Equipment which is designed to be operated from more than one type of supply shall be simultaneously connected to these supplies, unless this is prevented by the construction.

4.4.2.10 Cooling

Equipment cooling shall be restricted as follows, one fault at a time:

a) air-holes with filters shall be closed;

b) forced cooling by motor-driven fans shall be stopped;

c) cooling by circulation of water or other coolant shall be stopped;

d) loss of cooling liquid shall be simulated.

4.4.2.11 Heating devices

In equipment incorporating heating devices, the following faults shall be applied one at a time:

a) timers which limit the heating period shall be overridden to energize the heating circuit continuously;

b) temperature controllers, except for overtemperature protection devices meeting the requirements of 14.3, shall be overridden to energize the heating circuit continuously;

AVA Documents
Document Sharing Hub

Full document details: IEC 61010-2-030 2023 EXV

4.4.2.12 Insulation between circuits and parts

Insulation between circuits and parts which is below the level specified for BASIC INSULATION shall be bridged to check against the spread of fire if the method of 9.1 a) is used.

4.4.2.13 Interlocks

Each part of an interlock system for the protection of the OPERATOR shall be short-circuited or open-circuited in turn if the system prevents access to HAZARDS when a cover, etc. is removed without the use of a TOOL.

4.4.2.14 Voltage selectors

Voltage selectors which an OPERATOR can set for different RATED supply voltages shall be set for each possible setting with the equipment connected to each of its RATED supply circuits.

4.4.2.101 Surge protective devices

Surge protective devices used in MAINS CIRCUITS or in circuits measuring MAINS shall be short-circuited and open-circuited.

4.4.3 Duration of tests

4.4.3.1 General

The equipment shall be operated until further change as a result of the applied fault is unlikely. Each test is normally limited to 1 h since a secondary fault arising from a SINGLE FAULT CONDITION will usually manifest itself within that time. If there is an indication that a HAZARD of electric shock, spread of fire or injury to persons may eventually occur, the test shall be continued for 4 h unless one of these HAZARDS arises before then.

4.4.3.2 Current limiting devices

If a device which interrupts or limits the current during operation is included to limit the temperature of parts which can easily be touched, the maximum temperature attained by those parts shall be measured, whether the device operates or not.

4.4.3.3 Fuses

If a fault is terminated by the opening of a fuse and if the fuse does not operate within approximately 1 s, the current through the fuse under the relevant fault condition shall be measured. The pre-arcing time/current characteristics of the fuse shall be evaluated to find out whether the minimum operating current is reached and what is the maximum time before the fuse operates. The current through the fuse may vary as a function of time.

If the minimum operating current of the fuse is not reached in the test, the equipment shall be operated for a period corresponding to the maximum fusing time or continuously for the duration specified in 4.4.3.1, with the fuse replaced with a short-circuit.

4.4.4 Conformity after application of fault conditions

4.4.4.1 General

Conformity with requirements for protection against electric shock after the application of single faults is checked as follows:

a) by making the measurements of 6.3.2 to check that no ACCESSIBLE conductive parts have become HAZARDOUS LIVE;

b) by performing a voltage test on DOUBLE INSULATION or REINFORCED INSULATION to check that the protection is still at least at the level of BASIC INSULATION. The voltage tests are carried

AVA Documents
Document Sharing Hub

as specified in 6.7 and 6.8 (without humidity preconditioning) with the test voltage for BASIC INSULATION*;*

c) *by measuring the temperature of transformer windings if the protection against electrical* HAZARDS *is achieved by* DOUBLE INSULATION *or* REINFORCED INSULATION *within the transformer. The temperatures of Table 20 shall not be exceeded.*

4.4.4.2 Temperature

Conformity with requirements for temperature protection is checked by determining the temperature of the outer surface of the ENCLOSURE *and of parts which can easily be touched (See Clause 10).*

4.4.4.3 Spread of fire

Conformity with requirements for protection against the spread of fire is checked by placing the equipment on white tissue-paper covering a softwood surface and covering the equipment with cheesecloth. No molten metal, burning insulation, flaming particles, etc. shall fall on the surface on which the equipment stands and there shall be no charring, glowing, or flaming of the tissue paper or cheesecloth. Melting of insulation material shall be ignored if no HAZARD *could arise.*

4.4.4.4 Other HAZARDS

Conformity with other requirements for protection against HAZARDS *is checked as specified in Clauses 7 to 16.*

5 Marking and documentation

5.1 Marking

5.1.1 General

Equipment shall bear markings as specified in 5.1.2 to 5.2. Except for marking of internal parts, these markings shall be visible from the exterior, or be visible after removing a cover or opening a door without the aid of a TOOL, if the cover or door is intended to be removed or opened by an OPERATOR. Markings applying to the equipment as a whole shall not be put on parts which can be removed by an OPERATOR without the use of a TOOL.

For rack- or panel-mounted equipment, markings are permitted to be on a surface that becomes visible after removal of the equipment from the rack or panel.

Letter symbols for quantities and units shall be as specified in IEC 60027. Graphic symbols shall be in accordance with Table 1 if applicable. There are no colour requirements for symbols. Graphic symbols shall be explained in the documentation.

NOTE 1 IEC or ISO symbols should be used if available.

NOTE 2 Markings should not be on the bottom of the equipment, except on HAND-HELD EQUIPMENT or where space is limited.

Conformity is checked by inspection.

5.1.2 Identification

The equipment shall, as a minimum, be marked with:

a) the name or trade mark of the manufacturer or supplier;

b) a model number, name or other means to identify the equipment. If equipment bearing the same distinctive designation (model number) is manufactured at more than one location

AVA Documents
Document Sharing Hub

Full document details: IEC 61010-2-030 2023 EXV

equipment from each manufacturing location shall be marked so that the location can be identified.

NOTE The marking of factory location may be in code and need not be on the equipment exterior.

Conformity is checked by inspection.

5.1.3 MAINS supply

The equipment shall be marked with the following information.

a) Nature of supply:
   1) a.c.: RATED MAINS frequency or range of frequencies;
   2) d.c.: symbol 1 of Table 1.

   NOTE 1 For information purposes it may be useful to mark

   – equipment intended for a.c. with symbol 2 of Table 1;

   – equipment suitable for both a.c. and d.c. with symbol 3 of Table 1;

   – equipment for three-phase supply with symbol 4 of Table 1.

b) The RATED supply voltage(s) or the RATED range of supply voltages.

   NOTE 2 RATED voltage fluctuations may also be marked.

c) The maximum RATED power in watts (active power) or volt-amperes (apparent power), or the maximum RATED input current, with all accessories or plug-in modules connected. If the equipment can be used on more than one voltage range, separate values shall be marked for each voltage range unless the maximum and minimum values do not differ by more than 20 % of the mean value. The marked value shall not be less than 90 % of the maximum value.

d) Equipment which an OPERATOR can set for different RATED supply voltages shall be provided with means for the indication of the voltage for which the equipment is set. For PORTABLE EQUIPMENT the indication shall be visible from the exterior. If the equipment is so constructed that the supply voltage setting can be altered without the use of a TOOL, the action of changing the setting shall also change the indication.

e) Accessory MAINS socket-outlets accepting standard MAINS plugs shall be marked with the voltage if it is different from the MAINS supply voltage. If the outlet is for use only with specific equipment, it shall be marked to identify the equipment for which it is intended. If not, the maximum RATED current or power shall be marked, or symbol 14 of Table 1 placed beside the outlet with the full details included in the documentation.

Conformity is checked by inspection and by measurement of power or input current to check the requirements of 5.1.3 c) have been met. The measurement is made at each RATED voltage range with the equipment in the condition of maximum power or current consumption as applicable with all accessories and plug-in modules connected. If the input current varies during the normal operating cycle, the steady-state current is taken as the mean indication of the highest measured r.m.s. value during a 1 min period of the normal operation cycle. To exclude any initial inrush current, the measurement is not made until the current has stabilized (usually after 1 min). Transients are ignored.

Documents
Document Sharing Hub

Full document details: IEC 61010-2-030 2023 EXV

Table 1 – Symbols

Number	Symbol	Reference	Description
1		IEC 60417-5031 (2002-10)	Direct current
2		IEC 60417-5032 (2002-10)	Alternating current
3		IEC 60417-5033 (2002-10)	Both direct and alternating current
4	3	IEC 60417-5032-1 (2002-10)	Three-phase alternating current
5		IEC 60417-5017 (2006-08)	Earth (ground) TERMINAL
6		IEC 60417-5019 (2006-08)	PROTECTIVE CONDUCTOR TERMINAL
7		IEC 60417-5020 (2002-10)	Frame or chassis TERMINAL
8			Not used
9		IEC 60417-5007 (2009-02)	On (Power)
10		IEC 60417-5008 (2009-02)	Off (Power)
11		IEC 60417-5172 (2003-02)	Equipment protected throughout by DOUBLE INSULATION or REINFORCED INSULATION
12			Caution, possibility of electric shock
13		IEC 60417-5041 (2002-10)	Caution, hot surface
14		ISO 7000-0434B (2004-01)	Caution [a]
15		IEC 60417-5268 (2002-10)	In position of a bi-stable push control
16		IEC 60417-5269 (2002-10)	Out position of a bi-stable push control
17		ISO 361	Ionizing radiation

[a] See 5.4.1 which requires manufacturers to state that documentation must be consulted in all cases where this symbol is marked.

5.1.4 Fuses

For any fuse which may be replaced by an OPERATOR, there shall be a marking beside the fuseholder, which will enable the OPERATOR to identify the correct replacement fuse (see 5.4.5).

Documents
Document Sharing Hub

Full document details: IEC 61010-2-030 2023 EXV

Conformity is checked by inspection.

5.1.5 TERMINALS, connections and operating devices

5.1.5.1 General

If necessary for safety, an indication shall be given of the purpose of TERMINALS, connectors, controls, and indicators, including any connections for fluids such as gas, water and drainage. Where there is insufficient space, symbol 14 of Table 1 may be used.

NOTE 1 For additional information, see IEC 60445 and IEC 60447.

NOTE 2 Individual pins of multi-pin connectors need not be marked.

Push-buttons and actuators of emergency stop devices, and indicators used only to indicate a warning of danger or the need for urgent action, shall be coloured red and coded as specified in IEC 60073. If the meaning of colour relates to the safety of persons or the environment, supplementary means of coding shall be provided (see IEC 60073).

NOTE 3 National authorities may require that equipment used in certain environments meet the man-machine interface requirements pertinent to that environment.

Conformity is checked by inspection.

5.1.5.2 TERMINALS

TERMINALS for connection to the MAINS supply shall be identifiable.

The following TERMINALS shall be marked as follows:

a) FUNCTIONAL EARTH TERMINALS with symbol 5 of Table 1;

b) PROTECTIVE CONDUCTOR TERMINALS with symbol 6 of Table 1, except when the PROTECTIVE CONDUCTOR TERMINAL is part of an approved MAINS appliance inlet. The symbol shall be placed on the TERMINAL or close to it;

c) TERMINALS of circuits which are permitted by 6.6.3 to be connected to ACCESSIBLE conductive parts, with symbol 7 of Table 1 unless connection is self-evident;

NOTE This symbol may also be considered as a warning symbol in that it indicates that a HAZARDOUS LIVE voltage must not be connected to the TERMINAL. The symbol should also be used if it is likely that an OPERATOR could make such a connection inadvertently.

d) TERMINALS supplied from the interior of the equipment and which are HAZARDOUS LIVE, with the voltage, current, charge or energy value or range, or with symbol 14 of Table 1. This requirement does not apply to MAINS supply outlets where a standard MAINS socket outlet is used.

Conformity is checked by inspection.

5.1.5.101 Measuring circuit TERMINALS

5.1.5.101.1 General

Some measuring circuit TERMINALS for the equipment within the scope of this document also serve as output TERMINALS.

Except as permitted in 5.1.5.101.4:

a) the value of the nominal a.c. r.m.s. line-to-neutral or d.c. voltage of MAINS being measured shall be marked for measuring circuit TERMINALS RATED for MEASUREMENT CATEGORIES, or the value of the RATED voltage to earth for other measuring circuit TERMINALS, and

Documents
Document Sharing Hub
Full document details: IEC 61010-2-030 2023 EXV

NOTE CLEARANCES and solid insulation for MEASUREMENT CATEGORIES are specified for a nominal a.c. r.m.s. line-to-neutral or d.c. voltage of MAINS being measured. Neutral is considered to be earthed (see Annex I).

b) the value of the RATED voltage or the RATED current, as applicable, of each pair or set of measuring circuit TERMINALS that are intended to be used together shall be marked, and

c) the pertinent MEASUREMENT CATEGORY for each individual, pair, or set of measuring circuit TERMINALS, or symbol 14 of Table 1 shall be marked as specified in 5.1.5.101.2 and 5.1.5.101.3, if applicable.

Measuring circuit TERMINALS are usually arranged in pairs or sets. Each pair or set of TERMINALS may have a RATED voltage or a RATED current, or both, within that set, and each individual TERMINAL may have a RATED voltage to earth. For some equipment, the RATED voltage between TERMINALS may be different from the RATED voltage to earth. Markings shall be clear to avoid misunderstanding.

Symbol 14 of Table 1 shall be marked if current measuring TERMINALS are not intended for connection to current transformers without internal protection (see 101.2).

Markings shall be placed adjacent to the TERMINALS. However, if there is insufficient space (as in multi-input equipment), the marking may be on the RATING plate or scale plate, or the TERMINAL may be marked with symbol 14 of Table 1.

For any set of measuring circuit TERMINALS, symbol 14 of Table 1 does not need to be marked more than once, if it is close to the TERMINALS.

Conformity is checked by inspection and, if applicable, as specified in 5.1.5.101.2 and 5.1.5.101.3, taking the exceptions in 5.1.5.101.4 into account.

5.1.5.101.2 Measuring circuit TERMINALS RATED for MEASUREMENT CATEGORIES

The relevant MEASUREMENT CATEGORY shall be marked for TERMINALS of measuring circuits RATED for MEASUREMENT CATEGORIES. The MEASUREMENT CATEGORY markings shall be "CAT II", "CAT III" or "CAT IV" as applicable.

The RATED voltage of the TERMINALS of a measuring circuit intended for MAINS voltage measurements shall be equal to or higher than their RATED a.c. r.m.s. line-to-neutral or d.c. voltage.

Marking those TERMINALS with more than one type of MEASUREMENT CATEGORY and its RATED voltage is permissible.

Conformity is checked by inspection.

5.1.5.101.3 Measuring circuit TERMINALS RATED for connection to voltages above the levels of 6.3.1

Symbol 14 of Table 1 shall be marked adjacent to the TERMINALS for measuring circuit TERMINALS RATED for connection to voltages above the levels of 6.3.1, but that are not RATED for MEASUREMENT CATEGORIES (see also 5.4.1 b b)).

Conformity is checked by inspection.

5.1.5.101.4 Measuring circuit TERMINALS which are permanently connected, dedicated, or for non-HAZARDOUS LIVE voltages

Measuring circuit TERMINALS do not need to be marked if:

a) they are intended to be permanently connected and not ACCESSIBLE (see 5.4.3 aa) and bb)), or

Documents
Document Sharing Hub
Full document details: IEC 61010-2-030 2023 EXV

b) they are dedicated only for connection to specific TERMINALS of other equipment, or

c) it is obvious from other indications that the RATED voltage does not exceed the levels of 6.3.1.

NOTE Examples of acceptable indications that the RATED voltage of the inputs are intended to not exceed the levels of 6.3.1 include:

– the full scale deflection marking of a single-range indicating voltmeter or ammeter or maximum marking of a multi-range multimeter;

– the maximum range marking of a voltage selector switch;

– a marked voltage or power RATING expressed in dB, mW or W, where the equivalent value, as explained in the documentation, does not exceed 30 V a.c.

Conformity is checked by inspection.

5.1.6 Switches and circuit-breakers

If the power supply switch or circuit-breaker is used as the disconnecting device, the off-position shall be clearly marked.

NOTE It is recommended that the on-position also be marked.

Symbols 9 and 10 of Table 1 can, in some cases, also be suitable as the device identification (see 6.11.3.1 c)). A lamp alone is not considered to be a satisfactory marking.

If a push-button switch is used as the power supply switch, symbols 9 and 15 of Table 1 may be used to indicate the on-position, or symbols 10 and 16 to indicate the off-position, with the pair of symbols (9 and 15, or 10 and 16) close together.

Conformity is checked by inspection.

5.1.7 Equipment protected by DOUBLE INSULATION or REINFORCED INSULATION

Equipment which is only partially protected by DOUBLE INSULATION or REINFORCED INSULATION shall not be marked with symbol 11 of Table 1.

NOTE Equipment protected throughout by DOUBLE INSULATION or REINFORCED INSULATION may be marked with symbol 11 of Table 1.

Conformity is checked by inspection.

5.1.8 Field-wiring TERMINAL boxes

If the temperature of the TERMINALS or the ENCLOSURE of a field-wiring TERMINAL box or compartment exceeds 60 °C in NORMAL CONDITION at an ambient temperature of 40 °C, or at the maximum RATED ambient temperature if higher, there shall be a marking to warn the installer to consult the installation instructions before determining the temperature RATING of the cable to be connected to the TERMINALS. The marking shall be visible before and during connection, or be beside the TERMINALS. Symbol 14 is an acceptable marking.

Conformity, in case of doubt, is checked by measurement as specified in 10.3 a) and, if applicable, by inspection of markings.

5.2 Warning markings

Warning markings specified in this standard shall meet the following requirements.

Warning markings shall be visible when the equipment is ready for NORMAL USE. If a warning applies to a particular part of the equipment, the marking shall be placed on or near that part.

AVA Documents
Document Sharing Hub

Full document details: IEC 61010-2-030 2023 EXV

The size of warning markings shall be as follows:

a) symbols shall be at least 2,75 mm high. Text shall be at least 1,5 mm high and contrast in colour with the background;

b) symbols or text moulded, stamped or engraved in a material shall be at least 2,0 mm high. If not contrasting in colour, they shall have a depth or raised height of at least 0,5 mm.

If it is necessary for the RESPONSIBLE BODY or OPERATOR to refer to the documentation to preserve the protection afforded by the equipment, the equipment shall be marked with symbol 14 of Table 1. Symbol 14 is not required to be used if other symbols which address the safety aspects are used and explained in the documentation.

If the instructions for use state that an OPERATOR is permitted to gain access, using a TOOL, to a part or location which in NORMAL USE may present a HAZARD, there shall be a warning marking indicating that the equipment must be placed in a safe state before access. Symbol 14 shall be used for this purpose with the warning text included in the documentation. Additional symbols may be used to indicate the nature of the HAZARD such as symbol 12, 13, or 17 as appropriate.

Symbols are the preferred marking method over text warnings. Supplemental text may be provided adjacent to the symbol.

Conformity is checked by inspection.

5.3 Durability of markings

Required markings shall remain clear and legible under conditions of NORMAL USE and shall resist the effects of the cleaning agents specified by the manufacturer.

Conformity is checked by performing the following test for durability of markings on the outside of the equipment. The markings are rubbed by hand, without undue pressure, for 30 s with a cloth soaked with each specified cleaning agent (or, if not specified, with 70 % isopropyl alcohol).

After the above treatment the markings shall be clearly legible and adhesive labels shall not have worked loose or become curled at the edges.

5.4 Documentation

5.4.1 General

The following documentation necessary for safety purposes, as needed by the OPERATOR or the RESPONSIBLE BODY, shall be provided with the equipment. Safety documentation for service personnel authorized by the manufacturer shall be made available to such personnel:

a) intended use of the equipment;

b) technical specification;

c) name and address of the manufacturer or supplier from whom technical assistance may be obtained;

d) the information specified in 5.4.2 to 5.4.6;

e) information about how to mitigate RISKS remaining after a RISK assessment has been performed (see Clause 17);

f) for equipment which for safety reasons requires specific accessories (for example probe assemblies) with specific characteristics, the documentation shall indicate that only accessories which meet the manufacturer's specifications shall be used;

Documents
Document Sharing Hub

Full document details: IEC 61010-2-030 2023 EXV

g) if a HAZARD could be caused by an incorrect reading when measuring, indicating or detecting harmful or corrosive substances, or HAZARDOUS LIVE electrical quantities, the instructions shall provide guidance on how to determine that the equipment is functioning correctly;

h) instructions for lifting and carrying (see 7.5.1).

aa) information about each relevant MEASUREMENT CATEGORY if the measuring circuit is RATED for MEASUREMENT CATEGORIES (see 5.1.5.101.2);

bb) for measuring circuits that are not RATED for MEASUREMENT CATEGORIES, but that could be misused by connection to such circuits, a warning not to use the equipment for measurements on MAINS, and a detailed RATING including TRANSIENT OVERVOLTAGES (see AA.2.4 for more information).

Some equipment may have multiple MEASUREMENT CATEGORY RATINGS for the same measuring circuit. For such equipment, the documentation shall clearly identify the MEASUREMENT CATEGORIES where the equipment is intended to be used and where it shall not be used.

Warning symbols and warning statements that are marked on the equipment shall be explained in the documentation. In particular, the documentation shall include a statement that it must be consulted in all cases where symbol 14 of Table 1 is marked, in order to find out the nature of the potential HAZARDS and any actions which have to be taken to avoid them.

NOTE 1 Markings and text on equipment are considered equivalent to the documentation.

NOTE 2 If NORMAL USE involves the handling of harmful or corrosive substances, instruction should be given on correct use and safety provisions. If any harmful or corrosive substance is specified or supplied by the equipment manufacturer, the necessary information on its constituents and the correct disposal procedure should also be given.

Documentation may be provided on printed or electronic media, however printed information is required for all information necessary for safety that might not be available in electronic form at the time it is needed. The documentation shall be delivered with the equipment. Consideration shall be given to the ability of the RESPONSIBLE BODY to read the media.

Conformity is checked by inspection.

5.4.2 Equipment RATINGS

Documentation shall include the following:

a) the supply voltage or voltage range, frequency or frequency range, and power or current RATING;

b) a description of all input and output connections as required by 6.6.1 a);

c) the rating of the insulation of external circuits as required by 6.6.1 b);

d) a statement of the range of environmental conditions for which the equipment is designed including:

   1) indoor or outdoor use,

   2) altitude,

   3) temperature,

   4) relative humidity,

   5) MAINS supply voltage fluctuations,

   6) OVERVOLTAGE CATEGORY, except for cord/plug-connected equipment,

   7) WET LOCATION, if applicable,

   8) POLLUTION DEGREE of the intended environment,

e) for equipment RATED for ingress protection according to IEC 60529 the information required in 11.6.1;

AVA Documents
Document Sharing Hub

Full document details: IEC 61010-2-030 2023 EXV

f) for equipment with an impact RATING less than 5 J, the information specified in 8.1 d).

Conformity is checked by inspection.

5.4.3 Equipment installation

The documentation shall include installation and specific commissioning instructions and, if necessary for safety, warnings against HAZARDS which could arise during installation or commissioning or as a result of improper installation or commissioning of the equipment. Such information includes, if applicable:

a) assembly, location and mounting requirements;

b) instructions for protective earthing;

c) connections to the supply;

d) for PERMANENTLY CONNECTED EQUIPMENT:

   1) supply wiring requirements;

   2) requirements for any external switch or circuit-breaker (see 6.11.3.1) and external overcurrent protection devices (see 9.6.2) and a recommendation that the switch or circuit-breaker be near the equipment;

e) ventilation requirements;

f) requirements and safety characteristics for special external services, for example: maximum and minimum temperature, pressure, or flow of air or cooling liquid;

g) instructions relating to sound level (see 12.5.1).

aa) for measuring circuit TERMINALS intended for permanent connection and that are RATED for MEASUREMENT CATEGORIES, information regarding the MEASUREMENT CATEGORY, RATED voltages or RATED currents as applicable (see 5.1.5.101.2);

bb) for measuring circuit TERMINALS intended for permanent connection and that are not RATED for MEASUREMENT CATEGORIES, information regarding the RATED voltages, RATED currents, and RATED TRANSIENT OVERVOLTAGES as applicable (see 5.1.5.101.4).

NOTE It is recommended to add a statement in the documentation for the installation that the safety of any system incorporating the equipment is the responsibility of the assembler of the system.

Conformity is checked by inspection.

5.4.4 Equipment operation

Instructions for use shall include, if applicable:

a) identification and description of operating controls and their use in all operating modes;

b) instructions not to position the equipment so that it is difficult to operate the disconnecting device;

c) instructions for interconnection to accessories and other equipment, including indication of suitable accessories, detachable parts and any special materials;

d) specifications of limits for intermittent operation;

e) explanations of symbols related to safety which are used on the equipment;

f) instructions for replacement of consumable materials;

g) instructions for cleaning and decontamination;

h) a statement listing potentially poisonous or injurious substances that can be liberated from the equipment, and possible quantities;

i) detailed instructions about RISK reduction procedures relating to flammable liquids (see 9.5 c));

j) details of methods of reducing the RISKS of burns from surfaces permitted to exceed the temperature limits of 10.1.

AVA Documents
Document Sharing Hub

Full document details: IEC 61010-2-030 2023 EXV

If equipment conforming to IEC 60950 is used with equipment conforming to this standard, and if there is a HAZARD due to moisture or liquids, the instructions for use shall specify any additional precautions necessary.

There shall be a statement in the instructions that, if the equipment is used in a manner not specified by the manufacturer, the protection provided by the equipment may be impaired.

Conformity is checked by inspection.

5.4.5 Equipment maintenance and service

Instructions shall be provided to the RESPONSIBLE BODY in sufficient detail to permit safe maintenance, inspection and testing of the equipment, and to ensure continued safety of the equipment after the maintenance, inspection and test procedure.

If applicable, manufacturer's documentation shall instruct against replacing detachable MAINS supply cords by inadequately RATED cords.

For equipment using replaceable batteries, the specific battery type shall be stated.

The manufacturer shall specify any parts which are required to be examined or supplied only by the manufacturer or his agent.

The RATING and characteristics of replaceable fuses shall be stated.

Instructions on the following subjects shall be provided for service personnel, as necessary to permit safe servicing and continued safety of the equipment after servicing if the equipment is suitable to be serviced:

a) product-specific RISKS that may affect the service personnel;

b) protective measures for these RISKS;

c) verification of the safe state of the equipment after repair.

NOTE Instructions for service personnel need not be supplied to the RESPONSIBLE BODY, but should be made available to service personnel.

Conformity is checked by inspection.

5.4.6 Integration into systems or effects resulting from special conditions

Aspects resulting from integration into systems or effects resulting from special ambient or application conditions shall be described in the documentation.

Conformity is checked by inspection of the documentation.

6 Protection against electric shock

6.1 General

6.1.1 Requirements

Protection against electric shock shall be maintained in NORMAL CONDITION and SINGLE FAULT CONDITION (see 6.4 and 6.5). ACCESSIBLE parts (see 6.2) shall not be HAZARDOUS LIVE (see 6.3). Voltage, current, charge or energy between an ACCESSIBLE part and earth, or between any two ACCESSIBLE parts on the same piece of equipment within a distance of 1,8 m (over a surface or through air), shall not exceed the levels of 6.3.1 in NORMAL CONDITION nor of 6.3.2 in SINGLE FAULT CONDITION.

Documents
Document Sharing Hub

Full document details: IEC 61010-2-030 2023 EXV

Conformity is checked by the determination of ACCESSIBLE *parts as specified in 6.2 and by the measurements of 6.3 to establish that the levels of 6.3.1 and 6.3.2 are not exceeded, followed by the tests of 6.4 to 6.11.*

6.1.2 Exceptions

If it is not feasible for operating reasons to prevent the following parts being both ACCESSIBLE and HAZARDOUS LIVE, they are permitted to be ACCESSIBLE to an OPERATOR during NORMAL USE while they are HAZARDOUS LIVE:

a) parts of lamps and lamp sockets after lamp removal;

b) parts intended to be replaced by an OPERATOR (for example, batteries) and which may be HAZARDOUS LIVE during the replacement or other OPERATOR action, but only if they are ACCESSIBLE only by means of a TOOL and have a warning marking (see 5.2);

aa) locking or screw-held type measuring TERMINALS, including TERMINALS which do not require the use of a TOOL.

If any of the parts in a) and b) receives a charge from an internal capacitor, they shall not be HAZARDOUS LIVE 10 s after interruption of the supply.

If a charge is received from an internal capacitor, conformity is checked by the measurements of 6.3 to establish that the levels of 6.3.1 c) are not exceeded.

6.2 Determination of ACCESSIBLE parts

6.2.1 General

Unless obvious, determination of whether a part is ACCESSIBLE *is made as specified in 6.2.2 to 6.2.4 in all positions of* NORMAL USE. *Test fingers (see Annex B) and pins are applied without force unless a force is specified. Parts are considered to be* ACCESSIBLE *if they can be touched with any part of a test finger or test pin, or if they could be touched in the absence of a covering which is not considered to provide suitable insulation (see 6.9.2).*

If, in NORMAL USE, *an* OPERATOR *is intended to perform any actions (with or without a* TOOL*) that could increase the accessibility of parts, such actions are taken before performing the examinations of 6.2.2 to 6.2.4.*

NOTE Examples of such actions include:

a) removing covers;

b) opening doors;

c) adjusting controls;

d) replacing consumable material;

e) removing parts.

Rack-mounted and panel-mounted equipment is installed as specified in the manufacturer's instructions before making the examinations of 6.2.2 to 6.2.4. For such equipment, the OPERATOR *is assumed to be in front of the panel.*

6.2.2 Examination

The jointed test finger (see Figure B.2) is applied in every possible position. If a part could become ACCESSIBLE *by applying a force, the rigid test finger (see Figure B.1) is applied with a force of 10 N. The force is exerted by the tip of the test finger so as to avoid wedge and lever action. The test is applied to all outer surfaces, including the bottom. However, on equipment accepting plug-in modules the tip of the jointed test finger is inserted only to a depth of 180 mm from the opening in the equipment.*

AVA Documents
Document Sharing Hub

Full document details: IEC 61010-2-030 2023 EXV

The test finger is likewise applied to all openings in the ENCLOSURE*, including holes and* TERMINALS*. In these cases, the* ACCESSIBLE *parts of the* ENCLOSURE *are considered to include any part of the test finger which can be inserted into the hole or* TERMINAL *(see Figure 1).*

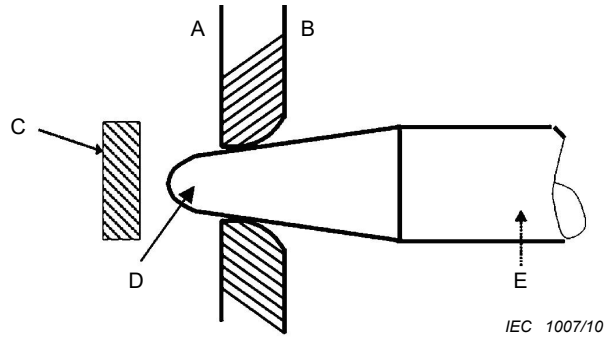

Key

A inside of equipment

B outside of equipment

C HAZARDOUS LIVE part

D tip of test finger is considered to be ACCESSIBLE

E test finger

Figure 1 – Measurements through openings in ENCLOSURES

6.2.3 Openings above parts that are HAZARDOUS LIVE

A metal test pin 100 mm long and 4 mm in diameter is inserted into any openings above parts which are HAZARDOUS LIVE*. The test pin is suspended freely and allowed to penetrate up to 100 mm.*

The additional safety measures of 6.5.1 for protection in SINGLE FAULT CONDITION *are not required solely because a part is* ACCESSIBLE *only by this test.*

NOTE This exception is permitted because the insertion of an object similar to this test pin is considered to be a SINGLE FAULT CONDITION and one means of protection is sufficient.

This test is not applied to TERMINALS*.*

6.2.4 Openings for pre-set controls

A metal test pin 3 mm in diameter is inserted through holes intended to give access to pre-set controls which require the use of a screwdriver or other TOOL*. The test pin is applied in every possible direction through the hole. Penetration shall not exceed three times the distance from the* ENCLOSURE *surface to the control shaft or 100 mm, whichever is smaller.*

6.3 Limit values for ACCESSIBLE parts

6.3.1 Levels in NORMAL CONDITION

Voltages above the levels of a) are deemed to be HAZARDOUS LIVE if any of the levels of b) or c) are exceeded at the same time.

a) The a.c. voltage levels are 30 V r.m.s., 42,4 V peak and the d.c. voltage level is 60 V. For equipment intended for use in WET LOCATIONS, the a.c. voltage levels are 16 V r.m.s., 22,6 V peak and the d.c.voltage level is 35 V.

b) The current levels are:

Documents
Document Sharing Hub
Full document details: IEC 61010-2-030 2023 EXV

1) 0,5 mA r.m.s. for sinusoidal waveforms, 0,7 mA peak for non-sinusoidal waveforms or mixed frequencies, or 2 mA d.c., when measured with the measuring circuit of Figure A.1. If the frequency does not exceed 100 Hz, the measuring circuit of Figure A.2 can be used. The measuring circuit of Figure A.4 is used for equipment intended for use in WET LOCATIONS.

2) 70 mA r.m.s. when measured with the measuring circuit of Figure A.3. This relates to possible burns at higher frequencies.

c) The levels of capacitive charge or energy are:

1) 45 μC charge for voltages up to 15 kV peak or d.c.; line A of Figure 3 shows the capacitance versus voltage where the charge is 45 μC.

2) 350 mJ stored energy for voltages above 15 kV peak or d.c.

6.3.2 Levels in SINGLE FAULT CONDITION

Voltages above the levels of a) are deemed to be HAZARDOUS LIVE if any of the levels of b) or c) are exceeded at the same time.

a) The a.c. voltage levels are 50 V r.m.s., 70 V peak and the d.c. voltage level is 120 V. For equipment intended for use in WET LOCATIONS, the a.c. voltage levels are 33 V r.m.s, 46,7 V peak and the d.c. voltage level is 70 V . For voltages of short duration, the duration versus voltage levels are those of Figure 2, measured across a 50 kΩ resistor.

b) The current levels are:

1) 3,5 mA r.m.s. for sinusoidal waveforms, 5 mA peak for non-sinusoidal waveforms or mixed frequencies, or 15 mA d.c., when measured with the measuring circuit of Figure A.1. If the frequency does not exceed 100 Hz, the measuring circuit of Figure A.2 can be used. The measuring circuit of Figure A.4 is used for equipment intended for use in WET LOCATIONS;

2) 500 mA r.m.s. when measured with the measuring circuit of Figure A.3. This relates to possible burns at higher frequencies.

c) The capacitance level is line B of Figure 3.

Documents
Document Sharing Hub
Full document details: IEC 61010-2-030 2023 EXV

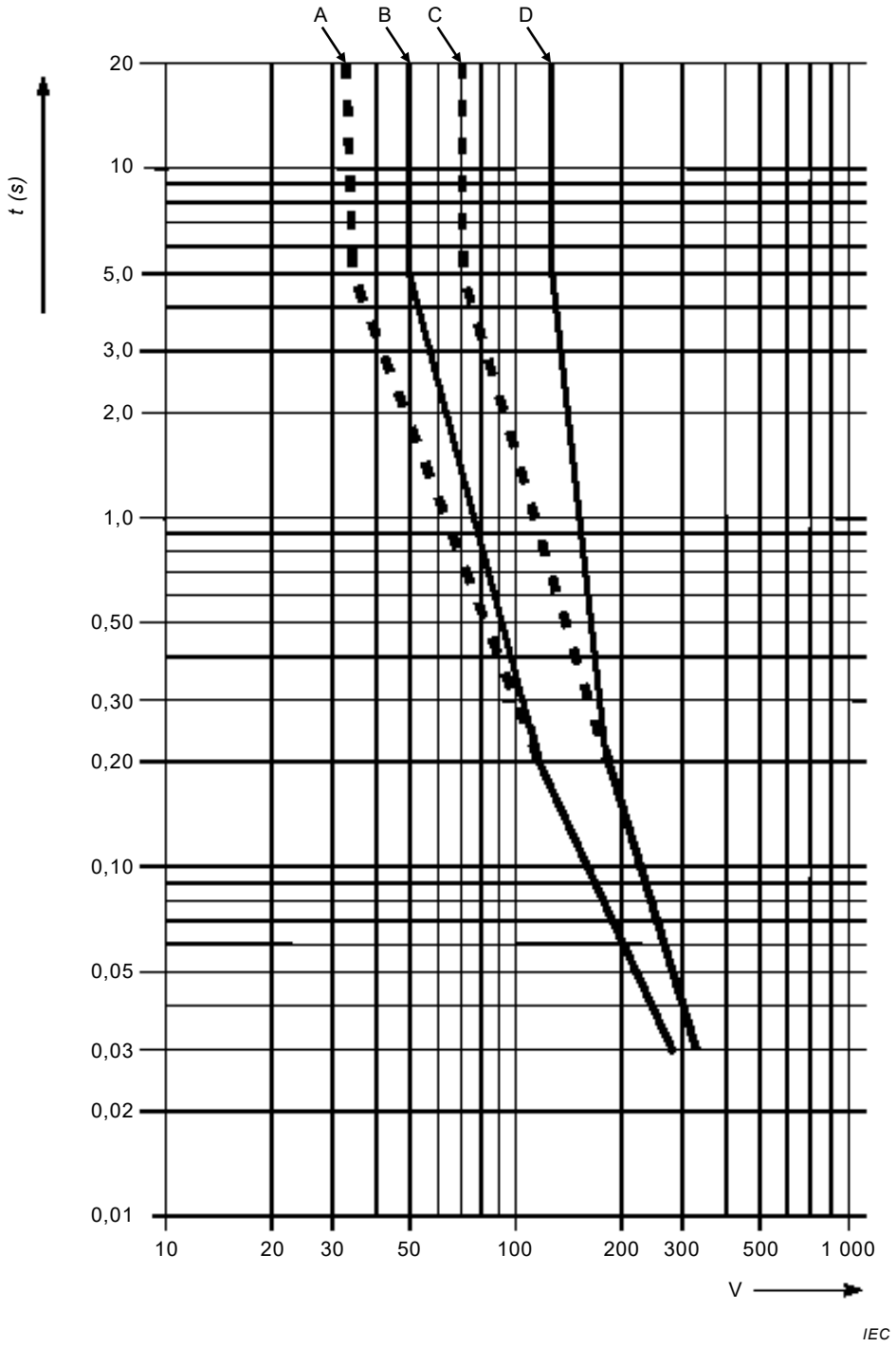

Key

A a.c. voltage level in WET LOCATIONS

B a.c. voltage level in dry locations

C d.c. voltage level in WET LOCATIONS

D d.c. voltage level in dry locations

Figure 2 – Maximum duration of short-term ACCESSIBLE voltages in SINGLE FAULT CONDITION (see 6.3.2 a))

Documents
Document Sharing Hub
Full document details: IEC 61010-2-030 2023 EXV

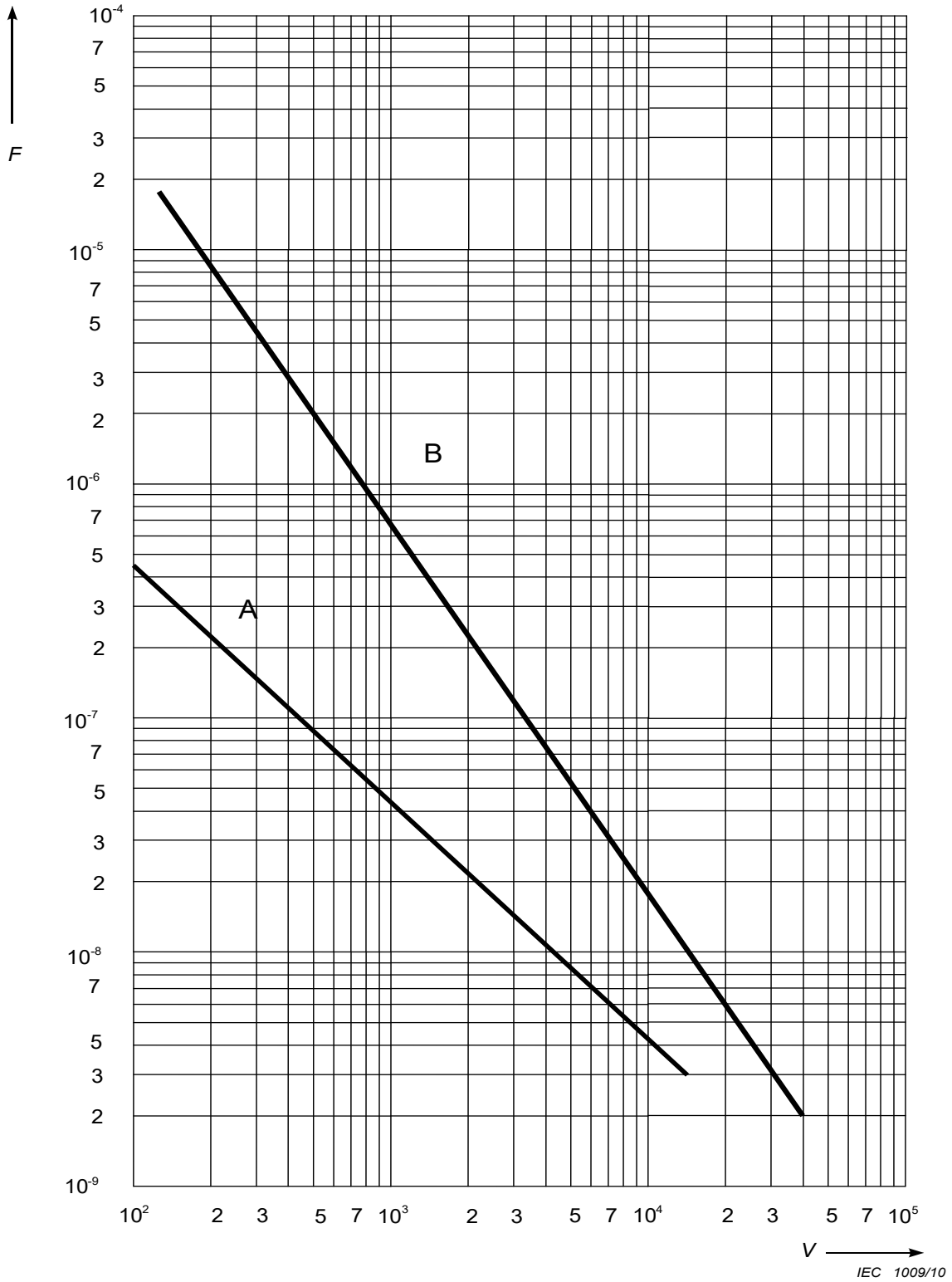

Key

A NORMAL CONDITION

B SINGLE FAULT CONDITION

Figure 3 – Capacitance level versus voltage in NORMAL CONDITION and SINGLE FAULT CONDITION (see 6.3.1 c) and 6.3.2 c))

Documents
Document Sharing Hub

Full document details: IEC 61010-2-030 2023 EXV