IEC 61076-2-010

Edition 1.0 2021-05

INTERNATIONAL STANDARD

NORME INTERNATIONALE

Connectors for electrical and electronic equipment – Product requirements – Part 2-010: Circular connectors – Detail specification for connectors with outer or inner push-pull locking mechanism, based on mating interfaces according to IEC 61076-2-101, IEC 61076-2-109, IEC 61076-2-111 and IEC 61076-2-113

Connecteurs pour équipements électriques et électroniques – Exigences de produit –
Partie 2-010: Connecteurs circulaires – Spécification particulière relative aux connecteurs avec mécanisme de verrouillage de type pousser-tirer externe ou interne, basés sur des interfaces d'accouplement conformes à l'IEC 61076-2-101, l'IEC 61076-2-109, l'IEC 61076-2-111 et l'IEC 61076-2-113

IEC 61076-2-010:2021-05(en-fr)

Documents
Document Sharing Hub
Full document details: IEC 61076-2-010-2021

THIS PUBLICATION IS COPYRIGHT PROTECTED
Copyright © 2021 IEC, Geneva, Switzerland

All rights reserved. Unless otherwise specified, no part of this publication may be reproduced or utilized in any form or by any means, electronic or mechanical, including photocopying and microfilm, without permission in writing from either IEC or IEC's member National Committee in the country of the requester. If you have any questions about IEC copyright or have an enquiry about obtaining additional rights to this publication, please contact the address below or your local IEC member National Committee for further information.

Droits de reproduction réservés. Sauf indication contraire, aucune partie de cette publication ne peut être reproduite ni utilisée sous quelque forme que ce soit et par aucun procédé, électronique ou mécanique, y compris la photocopie et les microfilms, sans l'accord écrit de l'IEC ou du Comité national de l'IEC du pays du demandeur. Si vous avez des questions sur le copyright de l'IEC ou si vous désirez obtenir des droits supplémentaires sur cette publication, utilisez les coordonnées ci-après ou contactez le Comité national de l'IEC de votre pays de résidence.

IEC Central Office
3, rue de Varembé
CH-1211 Geneva 20
Switzerland

Tel.: +41 22 919 02 11
info@iec.ch
www.iec.ch

About the IEC
The International Electrotechnical Commission (IEC) is the leading global organization that prepares and publishes International Standards for all electrical, electronic and related technologies.

About IEC publications
The technical content of IEC publications is kept under constant review by the IEC. Please make sure that you have the latest edition, a corrigendum or an amendment might have been published.

IEC publications search - webstore.iec.ch/advsearchform
The advanced search enables to find IEC publications by a variety of criteria (reference number, text, technical committee, …). It also gives information on projects, replaced and withdrawn publications.

IEC Just Published - webstore.iec.ch/justpublished
Stay up to date on all new IEC publications. Just Published details all new publications released. Available online and once a month by email.

IEC Customer Service Centre - webstore.iec.ch/csc
If you wish to give us your feedback on this publication or need further assistance, please contact the Customer Service Centre: sales@iec.ch.

IEC online collection - oc.iec.ch
Discover our powerful search engine and read freely all the publications previews. With a subscription you will always have access to up to date content tailored to your needs.

Electropedia - www.electropedia.org
The world's leading online dictionary on electrotechnology, containing more than 22 000 terminological entries in English and French, with equivalent terms in 18 additional languages. Also known as the International Electrotechnical Vocabulary (IEV) online.

A propos de l'IEC
La Commission Electrotechnique Internationale (IEC) est la première organisation mondiale qui élabore et publie des Normes internationales pour tout ce qui a trait à l'électricité, à l'électronique et aux technologies apparentées.

A propos des publications IEC
Le contenu technique des publications IEC est constamment revu. Veuillez vous assurer que vous possédez l'édition la plus récente, un corrigendum ou amendement peut avoir été publié.

Recherche de publications IEC - webstore.iec.ch/advsearchform
La recherche avancée permet de trouver des publications IEC en utilisant différents critères (numéro de référence, texte, comité d'études, …). Elle donne aussi des informations sur les projets et les publications remplacées ou retirées.

IEC Just Published - webstore.iec.ch/justpublished
Restez informé sur les nouvelles publications IEC. Just Published détaille les nouvelles publications parues. Disponible en ligne et une fois par mois par email.

Service Clients - webstore.iec.ch/csc
Si vous désirez nous donner des commentaires sur cette publication ou si vous avez des questions contactez-nous: sales@iec.ch.

IEC online collection - oc.iec.ch
Découvrez notre puissant moteur de recherche et consultez gratuitement tous les aperçus des publications. Avec un abonnement, vous aurez toujours accès à un contenu à jour adapté à vos besoins.

Electropedia - www.electropedia.org
Le premier dictionnaire d'électrotechnologie en ligne au monde, avec plus de 22 000 articles terminologiques en anglais et en français, ainsi que les termes équivalents dans 16 langues additionnelles. Egalement appelé Vocabulaire Electrotechnique International (IEV) en ligne.

AVA Documents
Document Sharing Hub

Full document details: IEC 61076-2-010-2021

IEC 61076-2-010

Edition 1.0 2021-05

INTERNATIONAL STANDARD

NORME INTERNATIONALE

Connectors for electrical and electronic equipment – Product requirements – Part 2-010: Circular connectors – Detail specification for connectors with outer or inner push-pull locking mechanism, based on mating interfaces according to IEC 61076-2-101, IEC 61076-2-109, IEC 61076-2-111 and IEC 61076-2-113

Connecteurs pour équipements électriques et électroniques – Exigences de produit – Partie 2-010: Connecteurs circulaires – Spécification particulière relative aux connecteurs avec mécanisme de verrouillage de type pousser-tirer externe ou interne, basés sur des interfaces d'accouplement conformes à l'IEC 61076-2-101, l'IEC 61076-2-109, l'IEC 61076-2-111 et l'IEC 61076-2-113

INTERNATIONAL
ELECTROTECHNICAL
COMMISSION

COMMISSION
ELECTROTECHNIQUE
INTERNATIONALE

ICS 31.220.10

ISBN 978-2-8322-9812-1

Warning! Make sure that you obtained this publication from an authorized distributor.
Attention! Veuillez vous assurer que vous avez obtenu cette publication via un distributeur agréé.

AVA Documents
Document Sharing Hub

® Registered trademark of the International Electrotechnical Commission
Marque déposée de la Commission Electrotechnique Internationale

Full document details: IEC 61076-2-010-2021

CONTENTS

FOREWORD 6
INTRODUCTION 8
1 Scope 10
2 Normative references 11
3 Terms and definitions 12
4 Technical information 13
4.1 System of levels 13
4.1.1 Performance levels 13
4.1.2 Compatibility levels, according to IEC 61076-1 13
4.2 Classification into climatic categories 13
4.3 Contact terminations 13
4.4 Available connector codings 13
4.5 Ratings 15
4.6 Marking 15
4.7 Safety aspects 15
5 Dimensional information 15
5.1 General 15
5.2 Survey of styles and variants 15
5.2.1 General 15
5.2.2 Fixed connectors 15
5.2.3 Free connectors 22
5.3 Interface dimension 31
5.3.1 General 31
5.3.2 Outer push-pull locking: male fixed connector side view 32
5.3.3 Outer push-pull locking: female fixed connector side view with details and engage-plane definition for male free cable connectors type 1 and 2 33
5.3.4 Inner push-pull locking: female fixed connector side view and male free connector side view with details for both 36
5.4 Gauges – Sizing gauges and retention force gauges 39
6 Characteristics 39
6.1 Classification into climatic category 39
6.2 Electrical characteristics 39
6.2.1 Voltage proof 39
6.2.2 Rated voltage – Rated impulse voltage – Pollution degree 39
6.2.3 Current-carrying capacity 40
6.2.4 Contact resistance 40
6.2.5 Insulation resistance 40
6.2.6 Transmission performance 40
6.3 Mechanical characteristics 40
6.3.1 Mating interface 40
6.3.2 Push-pull locking mechanism 41
6.4 Other characteristics 42
6.4.1 Vibration (sinusoidal) 42
6.4.2 Shock 42
6.4.3 Degree of protection provided by enclosures (IP code) 42
7 Test schedule 42
7.1 General 42

AVA Documents
Document Sharing Hub
Full document details: IEC 61076-2-010-2021

7.2 Test schedule 43
7.2.1 Test group P – Preliminary 43
7.2.2 Test group AP – Dynamic/climatic 43
7.2.3 Test group BP – Mechanical endurance 43
7.2.4 Test group CP – Electrical load 44
7.2.5 Test group DP – Chemical resistivity 44
7.2.6 Test group EP – Connection method tests 44
7.2.7 Test group FP – Electrical transmission requirements 44
Annex A (informative) Diameter and position of the female connector body 45
A.1 Diameter of the female connector body 45
A.2 Position of female connector body for connectors with outer push-pull locking 45
A.3 Position of female connector body for connectors with inner push-pull locking 46
Annex B (informative) Example for L-coded connector and comparison between screw- and inner push-pull-locking 48
Annex C (informative) Styles of female free connectors to extend free male cable connectors 50

Figure 1 – Tube insert, male contacts, thread for M12 screw locking on tube 17
Figure 2 – Fixed connector, male contacts, with M12 screw locking and outer push-pull locking, square flange front mounting 17
Figure 3 – Fixed connector, male contacts, with M12 screw locking and outer push-pull locking, with wire ends, single hole front mounting thread M16 × 1,5 18
Figure 4 – Fixed connector, male contacts, with M12 screw locking and outer push-pull locking, with wire ends, single hole front mounting thread M20 × 1,5 18
Figure 5 – Fixed connector, female contacts, with M12 screw locking and outer push-pull locking, with wire ends, single hole front mounting thread M16 × 1,5 19
Figure 6 – Fixed connector, female contacts, with M12 screw locking and outer push-pull locking, with wire ends, single hole front mounting thread M20 × 1,5 19
Figure 7 – Fixed connector, female contacts, with M12 screw locking and outer push-pull locking, with wire ends, single hole front mounting thread M16 × 1,5 and mounting orientation 20
Figure 8 – Fixed connector, female contacts, with M12 screw locking and outer push-pull locking, with wire ends, single hole rear mounting thread M16 × 1,5 20
Figure 9 – Fixed connector, female contacts, with M12 screw locking and inner push-pull locking, with wire ends, single hole front mounting thread M16 × 1,5 21
Figure 10 – Fixed connector, female contacts, with M12 screw locking and inner push-pull locking, with wire ends, single hole front mounting thread M20 × 1,5 21
Figure 11 – Fixed connector, female contacts, with M12 screw locking and inner push-pull locking, with wire ends, single hole front mounting thread M16 × 1,5 and mounting orientation 22
Figure 12 – Fixed connector, female contacts, with M12 screw locking and inner push-pull locking, with wire ends, single hole rear mounting thread M16 × 1,5 22
Figure 13 – Rewirable connector, male contacts, straight version, with outer push-pull locking 23
Figure 14 – Rewirable connector, male contacts, angled version, with outer push-pull locking 24
Figure 15 – Non-rewirable connector, male contacts, straight version, with outer push pull locking 24

Documents
Document Sharing Hub
Full document details: IEC 61076-2-010-2021

Figure 16 – Non-rewirable connector, male contacts, angled version, with outer push-pull locking 25
Figure 17 – Rewirable connector, female contacts, straight version, with outer push-pull locking 26
Figure 18 – Rewirable connector, female contacts, angled version, with outer push-pull locking 27
Figure 19 – Non-rewirable connector, female contacts, straight version, with outer push-pull locking 28
Figure 20 – Non-rewirable connector, female contacts, angled version, with outer push-pull locking 28
Figure 21 – Rewirable connector, male contacts, straight version, with inner push-pull locking 29
Figure 22 – Rewirable connector, male contacts, angled version, with inner push-pull locking 30
Figure 23 – Non-rewirable connector, male contacts, straight version, with inner push-pull locking 30
Figure 24 – Non-rewirable connector, male contacts, angled version, with inner push-pull locking 31
Figure 25 – Outer push-pull locking: male fixed connector side view 32
Figure 26 – Outer push-pull locking: female fixed connector side view with details and engage-plane definition for male free cable connector 34
Figure 27 – Inner push-pull-locking: female fixed connector side view and male free connector side view with details for both 37
Figure A.1 – Diameter of the female connector body 45
Figure A.2 – Position of the female insulating body for connectors with outer push-pull locking 46
Figure A.3 – Female fixed connector side view and position of insulating body 47
Figure B.1 – Dimensions for L-coded interface dimensions according to IEC 61076-2-111 48

Table 1 – Content of document 9
Table 2 – Available connector codings 14
Table 3 – Styles of fixed connectors 16
Table 4 – Styles of free connectors 23
Table 5 – Dimensions of style JM-OP, Figure 13 23
Table 6 – Dimensions of style KM-OP, Figure 14 24
Table 7 – Dimensions of style LM-OP, Figure 15 25
Table 8 – Dimensions of style MM-OP, Figure 16 25
Table 9 – Dimensions of style JF-OP, Figure 17 26
Table 10 – Dimensions of style KF-OP, Figure 18 27
Table 11 – Dimensions of style LF-OP, Figure 19 28
Table 12 – Dimensions of style MF-OP, Figure 20 29
Table 13 – Dimensions of style JM-IP, Figure 21 29
Table 14 – Dimensions of style KM-IP, Figure 22 30
Table 15 – Dimensions of style LM-IP, Figure 23 31
Table 16 – Dimensions of style MM-IP, Figure 24 31
Table 17 – Dimensions of fixed connector with push pull housing and male contacts 33

AVA Documents
Document Sharing Hub
Full document details: IEC 61076-2-010-2021

Table 18 – Dimensions for Figure 26 35
Table 19 – Dimensions of CA for Figure 26 36
Table 20 – Dimensions of CD for Figure 26 36
Table 21 – Dimensions of CC for Figure 26 36
Table 22 – Dimensions for Figure 27 38
Table 23 – Dimensions of engage-plane for Figure 27 39
Table 24 – Climatic category 39
Table 25 – Insertion and withdrawal forces for the locking mechanism 41
Table 26 – Number of test specimens 43
Table 27 – Test group BP 43
Table A.1 – Diameter of the female connector body, dimension X 45
Table A.2 – Dimension DAB 46
Table A.3 – Dimension FP for Figure A.3 47
Table B.1 – Comparison of dimension between screw- and push-pull-locking 49
Table C.1 – Female free connector styles to extend push-pull free male connectors 50

Documents
Document Sharing Hub
Full document details: IEC 61076-2-010-2021

INTERNATIONAL ELECTROTECHNICAL COMMISSION

CONNECTORS FOR ELECTRICAL AND ELECTRONIC EQUIPMENT – PRODUCT REQUIREMENTS –

Part 2-010: Circular connectors – Detail specification for connectors with outer or inner push-pull locking mechanism, based on mating interfaces according to IEC 61076-2-101, IEC 61076-2-109, IEC 61076-2-111 and IEC 61076-2-113

FOREWORD

1) The International Electrotechnical Commission (IEC) is a worldwide organization for standardization comprising all national electrotechnical committees (IEC National Committees). The object of IEC is to promote international co-operation on all questions concerning standardization in the electrical and electronic fields. To this end and in addition to other activities, IEC publishes International Standards, Technical Specifications, Technical Reports, Publicly Available Specifications (PAS) and Guides (hereafter referred to as "IEC Publication(s)"). Their preparation is entrusted to technical committees; any IEC National Committee interested in the subject dealt with may participate in this preparatory work. International, governmental and non-governmental organizations liaising with the IEC also participate in this preparation. IEC collaborates closely with the International Organization for Standardization (ISO) in accordance with conditions determined by agreement between the two organizations.
2) The formal decisions or agreements of IEC on technical matters express, as nearly as possible, an international consensus of opinion on the relevant subjects since each technical committee has representation from all interested IEC National Committees.
3) IEC Publications have the form of recommendations for international use and are accepted by IEC National Committees in that sense. While all reasonable efforts are made to ensure that the technical content of IEC Publications is accurate, IEC cannot be held responsible for the way in which they are used or for any misinterpretation by any end user.
4) In order to promote international uniformity, IEC National Committees undertake to apply IEC Publications transparently to the maximum extent possible in their national and regional publications. Any divergence between any IEC Publication and the corresponding national or regional publication shall be clearly indicated in the latter.
5) IEC itself does not provide any attestation of conformity. Independent certification bodies provide conformity assessment services and, in some areas, access to IEC marks of conformity. IEC is not responsible for any services carried out by independent certification bodies.
6) All users should ensure that they have the latest edition of this publication.
7) No liability shall attach to IEC or its directors, employees, servants or agents including individual experts and members of its technical committees and IEC National Committees for any personal injury, property damage or other damage of any nature whatsoever, whether direct or indirect, or for costs (including legal fees) and expenses arising out of the publication, use of, or reliance upon, this IEC Publication or any other IEC Publications.
8) Attention is drawn to the Normative references cited in this publication. Use of the referenced publications is indispensable for the correct application of this publication.
9) Attention is drawn to the possibility that some of the elements of this IEC Publication may be the subject of patent rights. IEC shall not be held responsible for identifying any or all such patent rights.

International Standard IEC 61076-2-010 has been prepared by subcommittee 48B: Electrical connectors, of IEC technical committee 48: Electrical connectors and mechanical structures for electrical and electronic equipment.

The text of this International Standard is based on the following documents:

FDIS	Report on voting
48B/2876/FDIS	48B/2887/RVD

Full information on the voting for its approval can be found in the report on voting indicated in the above table.

Documents
Document Sharing Hub

Full document details: IEC 61076-2-010-2021

The language used for the development of this International Standard is English.

This document was drafted in accordance with ISO/IEC Directives, Part 2, and developed in accordance with ISO/IEC Directives, Part 1 and ISO/IEC Directives, IEC Supplement, available at www.iec.ch/members_experts/refdocs. The main document types developed by IEC are described in greater detail at www.iec.ch/standardsdev/publications.

A list of all parts in the IEC 61076 series, published under the general title *Connectors for electrical and electronic equipment – Product requirements*, can be found on the IEC website.

The committee has decided that the contents of this document will remain unchanged until the stability date indicated on the IEC website under webstore.iec.ch in the data related to the specific document. At this date, the document will be

- reconfirmed,
- withdrawn,
- replaced by a revised edition, or
- amended.

Documents
Document Sharing Hub

Full document details: IEC 61076-2-010-2021

INTRODUCTION

The International Electrotechnical Commission (IEC) draws attention to the fact that it is claimed that compliance with this International Standard may involve the use of patent(s) concerning the free connectors

The IEC takes no position concerning the evidence, validity and scope of these patent rights.

The holder of this patent right has assured the IEC that he/she is willing to give free licences with applicants throughout the world. In this respect, the statement of the holder of this patent right is registered with the IEC.

Information may be obtained from:

Molex LLC
2222 Wellington Court
Lisle, IL60532

USA

HARTING Electronics GmbH
Marienwerderstraße 3
32339 Espelkamp

Germany

Documents
Document Sharing Hub

Full document details: IEC 61076-2-010-2021

Table 1 – Content of document

IEC SC 48B – Electrical connectors Specification available from: IEC General secretariat Or from the addresses shown on the inside cover.	IEC 61076-2-010 Ed. 1
DETAIL SPECIFICATION in accordance with IEC 61076-1	
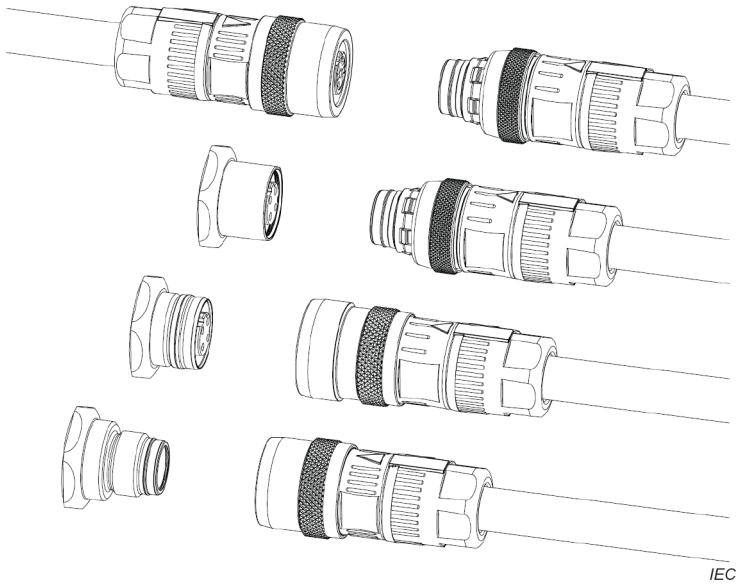	Circular M12 connectors with push-pull locking for power and/or signal and/or data transmission Fixed connectors with male and female contacts, mateable with M12 screw or push-pull plugs Free cable connectors with male or female contacts with push-pull locking Rewireable – Non-rewirable
	Fixed connectors, with front, rear or single hole mounting Straight and right-angled free cable connectors

Table 1 shows the content of this document.

Documents
Document Sharing Hub
Full document details: IEC 61076-2-010-2021

CONNECTORS FOR ELECTRICAL AND ELECTRONIC EQUIPMENT – PRODUCT REQUIREMENTS –

Part 2-010: Circular connectors – Detail specification for connectors with outer or inner push-pull locking mechanism, based on mating interfaces according to IEC 61076-2-101, IEC 61076-2-109, IEC 61076-2-111 and IEC 61076-2-113

1 Scope

This part of IEC 61076-2 specifies circular connectors with a push-pull locking mechanism of a size derived from, and thus being compatible with M12 screw-locking connectors (free connectors with screw-locking according to IEC 61076-2-101, IEC 61076-2-109, IEC 61076-2-111 or IEC 61076-2-113 are compatible with push-pull fixed interfaces according to this document) and with mating interfaces according to IEC 61076-2-101, IEC 61076-2-109, IEC 61076-2-111 (except codings E in general and coding F for inner push-pull) or IEC 61076-2-113.

A fixed connector with push-pull locking according to this document is intermateable with a correspondingly coded free connector with M12 screw-locking according to any of the above mentioned standards.

NOTE 1 M12 is the dimension of the thread of the screw-locking mechanism of circular connectors with M12 screw-locking.

NOTE 2 IEC 61076-2-012 defines another inner push-pull for fixed female connectors which is however not compatible to the inner push-pull defined in this document. Annex C shows the different styles of female free connectors to extend male free connectors.

This document covers both:

a) power connectors with current ratings up to 16 A and voltage ratings up to 630 V, typically used for power supply and power applications in industrial premises, and

b) connectors for data and signal transmission with frequencies up to 500 MHz.

These connectors consist of both, fixed and free connectors, either rewirable or non-rewirable, with M12 push-pull locking as explained above. Male connectors have round contacts from Ø 0,6 mm up to Ø 1,5 mm. In addition, the push-pull mechanisms consist of 2 different push-pull designs:

c) An outer push-pull for male and female fixed connector, where the locking groove is placed onto the outer cylindric surface of the housing. The outer push-pull for female fixed connectors is made for 2 different types of male connectors. It has locking means for both types on its outer surface.

NOTE 3 For design and dimensions see 5.3.2 and 5.3.3.

d) An inner push-pull for female fixed connectors and for male free connectors, where the locking means are placed onto the inner cylindric surface of the housing.

NOTE 4 For design and dimensions see 5.3.4.

The different codings provided by IEC 61076-2 series detail specifications mentioned within this document prevent the mating of accordingly coded male or female connectors to any other similarly sized interfaces, covered by other standards and the cross-mating between the different codings provided by any other IEC 61076-2 series detail specification mentioned within this document.

Documents
Document Sharing Hub

Full document details: IEC 61076-2-010-2021

2 Normative references

The following documents are referred to in the text in such a way that some or all of their content constitutes requirements of this document. For dated references, only the edition cited applies. For undated references, the latest edition of the referenced document (including any amendments) applies.

IEC 60050-581:2008, *International Electrotechnical Vocabulary (IEV) – Part 581: Electromechanical components for electronic equipment*

IEC 60068-1, *Environmental testing – Part 1: General and guidance*

IEC 60512-1, *Connectors for electrical and electronic equipment – Tests and measurements – Part 1: Generic specification*

IEC 60512-2-1, *Connectors for electronic equipment – Tests and measurements – Part 2-1: Electrical continuity and contact resistance tests – Test 2a: Contact resistance – Millivolt level method*

IEC 60512-3-1, *Connectors for electronic equipment – Tests and measurements – Part 3-1: Insulation tests – Test 3a: Insulation resistance*

IEC 60512-4-1, *Connectors for electronic equipment – Tests and measurements – Part 4-1: Voltage stress tests – Test 4a: Voltage proof*

IEC 60512-5-1, *Connectors for electronic equipment – Tests and measurements – Part 5-1: Current-carrying capacity tests – Test 5a: Temperature rise*

IEC 60512-6-3, *Connectors for electronic equipment – Tests and measurements – Part 6-3: Dynamic stress tests – Test 6c: Shock*

IEC 60512-6-4, *Connectors for electronic equipment – Tests and measurements – Part 6-4: Dynamic stress tests – Test 6d: Vibration (sinusoidal)*

IEC 60512-9-1, *Connectors for electronic equipment – Tests and measurements – Part 9-1: Endurance tests – Test 9a: Mechanical operation*

IEC 60512-13-1, *Connectors for electronic equipment – Tests and measurements – Part 13-1: Mechanical operation tests – Test 13a: Engaging and separating forces*

IEC 60512-13-2, *Connectors for electronic equipment – Tests and measurements – Part 13-2: Mechanical operation tests – Test 13b: Insertion and withdrawal forces*

IEC 60512-13-5, *Connectors for electronic equipment – Tests and measurements – Part 13-5: Mechanical operation tests – Test 13e: Polarizing and keying method*

IEC 60512-15-6, *Connectors for electronic equipment – Tests and measurements – Part 15-6: Connector tests (mechanical) – Test 15f: Effectiveness of connector coupling devices*

IEC 60529:1989, *Degrees of protection provided by enclosures (IP Code)*
IEC 60529:1989/AMD1:1999
IEC 60529:1989/AMD2:2013

IEC 60664-1, *Insulation coordination for equipment within low-voltage systems – Part 1: Principles, requirements and tests*

Documents
Document Sharing Hub

Full document details: IEC 61076-2-010-2021

IEC 60998-2-1:2002, *Connecting devices for low-voltage circuits for household and similar purposes – Part 2-1: Particular requirements for connecting devices as separate entities with screw-type clamping units*

IEC 61076-1:2006, *Connectors for electronic equipment – Product requirements – Part 1: Generic* specification
IEC 61076-1:2006/AMD1:2019

IEC 61076-2-012, *Connectors for electrical and electronic equipment – Product requirements Part 2-012: Circular connectors – Detail specification for connectors with inner push-pull locking, based on M12 connector interfaces according to IEC 61076-2-101, IEC 61076-2-109, IEC 61076-2-111 and IEC 61076-2-113*

IEC 61076-2-101:2012, *Connectors for electronic equipment – Product requirements – Part 2-101: Circular connectors – Detail specification for M12 connectors with screw-locking*

IEC 61076-2-109:2014, *Connectors for electronic equipment – Product requirements – Part 2-109: Circular connectors – Detail specification for connectors with M 12 × 1 screw-locking, for data transmission frequencies up to 500 MHz*

IEC 61076-2-111:2017, *Connectors for electrical and electronic equipment – Product requirements – Part 2-111: Circular connectors – Detail specification for power connectors with M12 screw-locking*

IEC 61076-2-113:2017, *Connectors for electronic equipment – Product requirements – Part 2-113: Circular connectors – Detail specification for connectors with M12 screw locking with power and signal contacts for data transmission with frequency up to 100 MHz*

IEC 61984, *Connectors – Safety requirements and tests*

3 Terms and definitions

For the purposes of this document, the terms and definitions given in IEC 60050-581, IEC 60512-1 and IEC 61076-1 apply, together with the following.

ISO and IEC maintain terminological databases for use in standardization at the following addresses:

- IEC Electropedia: available at http://www.electropedia.org/
- ISO Online browsing platform: available at http://www.iso.org/obp

3.1
mounting orientation
circular mounting position of the connector in relation to the polarization of the mating interface

Note 1 to entry: Where the free connector has an angled cable entry (as opposed to a straight cable entry), the angle between the entry direction and the polarisation keyway should be specified.

Documents
Document Sharing Hub

Full document details: IEC 61076-2-010-2021

4 Technical information

4.1 System of levels

4.1.1 Performance levels

Performance levels for these connectors (mating cycles for the mating interface only) are specified in the applicable standard, either IEC 61076-2-101, IEC 61076-2-109, IEC 61076-2-111 or IEC 61076-2-113. The same performance level (number of cycles of mechanical operations, i.e. one locking and one unlocking operation) shall apply to the specific complete connector with the push-pull locking described herein.

A qualification of the push-pull locking mechanism for the highest performance level shall cover the qualifications for all lower performance levels required by the various mating interfaces, which are not subject to re-qualification for all those aspects already covered in the relevant IEC standards mentioned above.

4.1.2 Compatibility levels, according to IEC 61076-1

The connectors according to this document are intermateable according to IEC 61076-1.

4.2 Classification into climatic categories

For the classifications of the connectors into climatic categories in accordance with the general rules given in IEC 60068-1, see the applicable standard, either IEC 61076-2-101, IEC 61076-2-109, IEC 61076-2-111 or IEC 61076-2-113.

The qualification of the push-pull locking interface for the most demanding climatic category (lowest LCT, highest UCT, highest number of days of damp heat, steady state) will cover all less demanding climatic categories established for the mating interfaces described in the above-mentioned IEC 61076-2-101, IEC 61076-2-109, IEC 61076-2-111 or IEC 61076-2-113.

4.3 Contact terminations

The contact terminations shall be of the following types: screw, crimp, spring type, insulation piercing, insulation displacement, press-in or solder according to the applicable standard for the mating interface (either IEC 61076-2-101, IEC 61076-2-109, IEC 61076-2-111 or IEC 61076-2-113).

4.4 Available connector codings

The available codings are shown in Table 2.

Documents
Document Sharing Hub

Full document details: IEC 61076-2-010-2021

Table 2 – Available connector codings

Coding	Type	Contacts	Rated voltage AC or DC	Rated current A	Reference
A	5-way	2 to 4	250	4	IEC 61076-2-101
		5	60		
	8-way	6 to 8	30	2	
	12-way	9 to 12	30	1,5	
	17-way	13 to 17	30	1,5	
B	5-way	5	60	4	
C	3-way (2+PE)	3 (2+PE)	250	4	
	4-way (3+PE)	4 (3+PE)	250	4	
	5-way (4+PE)	5 (4+PE)	60	2	
	6-way (5+PE)	6 (5+PE)	30	2	
D	4-way	4	250	4	
P	5-way (4+PE)	5 (4+PE)	60	4	
H	8-way	2 to 8	50 AC / 60 DC	0,5	IEC 61076-2-109
X	8-way	2 to 8	50 AC / 60 DC	0,5	
F (for outer push-pull)	4-way	2	63	16	IEC 61076-2-111
		3			
		4			
K	5-way (4+PE)	3 (2+PE)	630	12	
		4 (3+PE)			
		5 (4+PE)			
L	5-way (4+FE)	3 (2+FE)	63	16	
		4 (3+FE)			
		5 (4+FE)			
	4-way	2			
		3			
		4			
M	6-way (5+PE)	3 (2+PE)	630	8	
		4 (3+PE)			
		5 (4+PE)			
		6 (5+PE)			
S	4-way (3+PE)	3 (2+PE)	630	12	
		4 (3+PE)			
T	4-way	2	63	12	
		3			
		4			
Type 1	6-way	4 (2 data pairs) + 2 power	50	10 (power)	IEC 61076-2-113
Type 2	8-way	4 (2 data pairs) + 4 power	50	6 (power)	
Type 3	6-way	4 (2 data pairs) + 2 power	50	12 (power)	
Type 4	8-way	4 (2 data pairs) + 4 power	50	6 (power)	

NOTE 1 E-coding as defined in IEC 61076-2-111 is not included in this document. F-coded as defined in IEC 61076-2-111 is only included for outer push-pull.

NOTE 2 A voltage rating 630 V according to IEC 60664-1 actually covers a rated voltage up to and including 690 V.

AVA Documents Document Sharing Hub

Full document details: IEC 61076-2-010-2021

4.5 Ratings

Rated voltages and currents are specified in IEC 61076-2-101, IEC 61076-2-109, IEC 61076-2-111 or IEC 61076-2-113, respectively. Table 2 provides an overview of such ratings.

4.6 Marking

The marking of the connector and the package shall be in accordance with 2.7 of IEC 61076-1:2006.

4.7 Safety aspects

For safety aspects IEC 61984 shall be considered whenever the applicable standard for the mating interface (either IEC 61076-2-101, IEC 61076-2-109, IEC 61076-2-111 or IEC 61076-2-113) assigns a rated voltage within the scope of IEC 61984.

5 Dimensional information

5.1 General

Throughout this document the dimensions are in mm. The drawings are shown in the first angle projection. The shape of the connectors may deviate from those given in the following drawings if the specified dimensions are not influenced.

Missing dimensions shall be chosen according to common characteristics and intended use.

5.2 Survey of styles and variants

5.2.1 General

For all connector styles with cables, the length of the cable or wire shall be agreed between manufacturer and user.

The interface dimensions of the free connectors shall be chosen according to the common characteristics of the fixed connector styles, except for free connectors with inner push-pull whose interface dimensions are given in 5.3.4.

For reliable intermateability, the dimensions of the free connector body as detailed in IEC 61076-2-101, IEC 61076-2-109, IEC 61076-2-111 or IEC 61076-2-113 shall be met for the free male connector body with screw or push-pull locking.

5.2.2 Fixed connectors

5.2.2.1 General

Table 3 shows the styles of fixed connectors.

Documents
Document Sharing Hub

Full document details: IEC 61076-2-010-2021

Table 3 – Styles of fixed connectors

Style	Description
AM-OP	Tube insert, male contacts, thread for M12 screw-locking on tube
DM-OP	Fixed connector, male contacts, with M12 screw locking and outer push-pull locking, square flange front mounting
EM-OP	Fixed connector, male contacts, with M12 screw locking and outer push-pull locking, with wire ends, single hole front mounting thread M16 × 1,5
FM-OP	Fixed connector, male contacts, with M12 screw locking and outer push-pull locking, with wire ends, single hole front mounting thread M20 × 1,5
EF-OP	Fixed connector, female contacts, with M12 screw locking and outer push-pull locking, with wire ends, single hole front mounting thread M16 × 1,5
FF-OP	Fixed connector, female contacts, with M12 screw locking and outer push-pull locking, with wire ends, single hole front mounting thread M20 × 1,5
GF-OP	Fixed connector, female contacts, with M12 screw locking and outer push-pull locking, with wire ends, single hole front mounting thread M16 × 1,5 and mounting orientation
IF-OP	Fixed connector, female contacts, with M12 screw locking and outer push-pull locking, with wire ends, single hole rear mounting thread M16 × 1,5
EF-IP	Fixed connector, female contacts, with M12 screw locking and inner push-pull locking, with wire ends, single hole front mounting thread M16 × 1,5
FF-IP	Fixed connector, female contacts, with M12 screw locking and inner push-pull locking, with wire ends, single hole front mounting thread M20 × 1,5
GF-IP	Fixed connector, female contacts, with M12 screw locking and inner push-pull locking, with wire ends, single hole front mounting thread M16 × 1,5 and mounting orientation
IF-IP	Fixed connector, female contacts, with M12 screw locking and inner push-pull locking, with wire ends, single hole rear mounting thread M16 × 1,5

NOTE Style name xy-zw where x = A, D, E, F, G or I; according to style features, y = M (male contacts) or F (female contacts), zw = OP (outer push-pull) or IP = (inner push-pull).

5.2.2.2 Style AM-OP

Figure 1 shows a tube insert, male contacts, thread for M12 screw locking on tube.

Documents
Document Sharing Hub

Full document details: IEC 61076-2-010-2021

Dimensions in mm

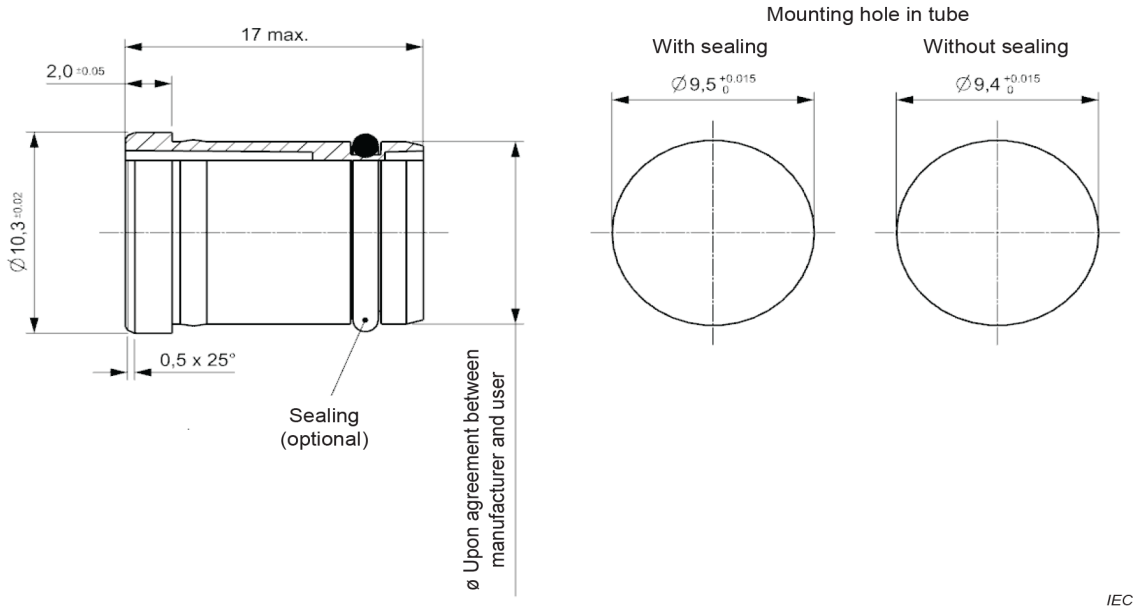

Figure 1 – Tube insert, male contacts, thread for M12 screw locking on tube

5.2.2.3 Style DM-OP

Figure 2 shows a fixed connector, male contacts, with M12 screw locking and outer push-pull locking, square flange front mounting. Dimensional details for the interface dimensions can be found in Figure 25 in 5.3.2.

Dimensions in mm

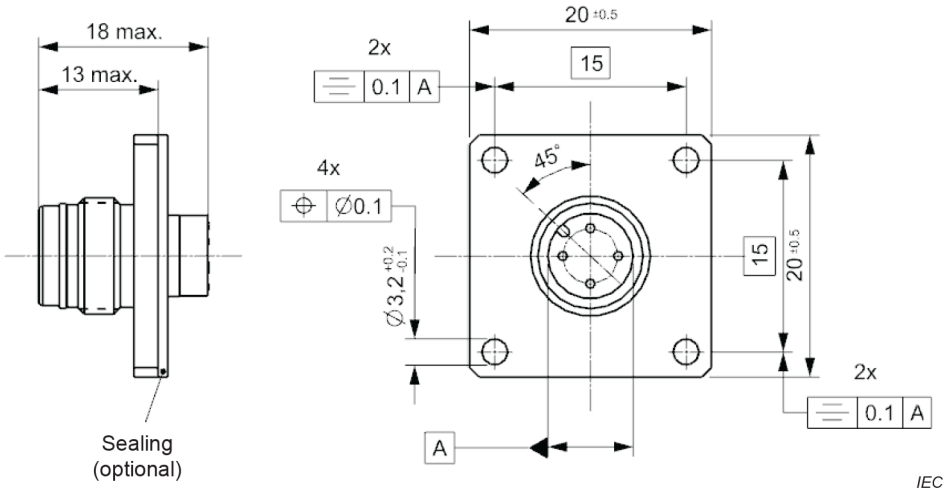

Figure 2 – Fixed connector, male contacts, with M12 screw locking and outer push-pull locking, square flange front mounting

5.2.2.4 Style EM-OP

Figure 3 shows a fixed connector, male contacts, with M12 screw locking and outer push-pull locking, with wire ends, single hole front mounting thread M16 × 1,5. Dimensional details for the interface dimensions can be found in Figure 25 in 5.3.2.

AVA Documents
Document Sharing Hub
Full document details: IEC 61076-2-010-2021

Dimensions in mm

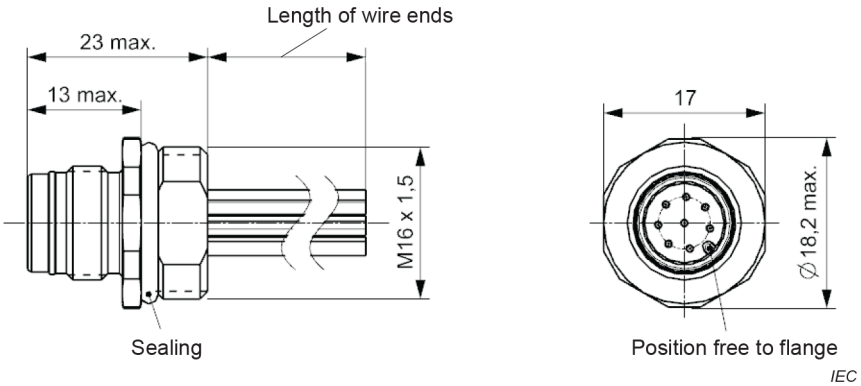

Figure 3 – Fixed connector, male contacts, with M12 screw locking and outer push-pull locking, with wire ends, single hole front mounting thread M16 × 1,5

5.2.2.5 Style FM-OP

Figure 4 shows a fixed connector, male contacts, with M12 screw locking and outer push-pull locking, with wire ends, single hole front mounting thread M20 × 1,5. Dimensional details for the interface dimensions can be found in Figure 25 in 5.3.2.

Dimensions in mm

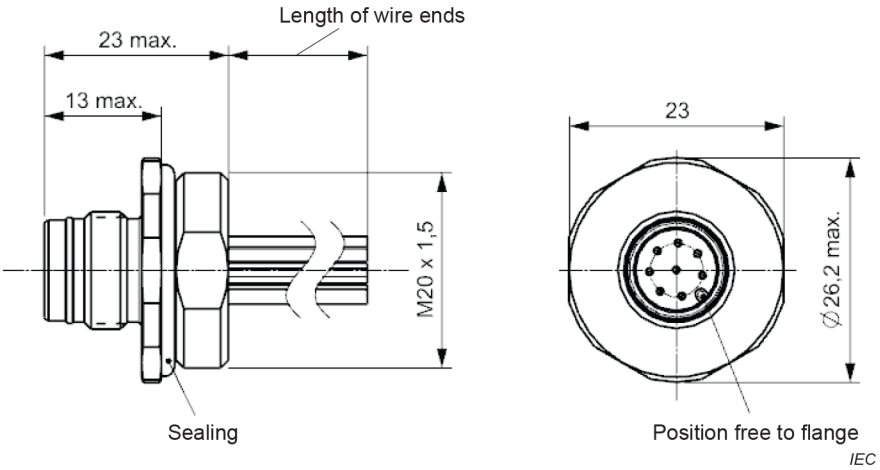

Figure 4 – Fixed connector, male contacts, with M12 screw locking and outer push-pull locking, with wire ends, single hole front mounting thread M20 × 1,5

5.2.2.6 Style EF-OP

Figure 5 shows a fixed connector, female contacts, with M12 screw locking and outer push-pull locking, with wire ends, single hole front mounting thread M16 × 1,5.

Documents
Document Sharing Hub
Full document details: IEC 61076-2-010-2021

Dimensions in mm

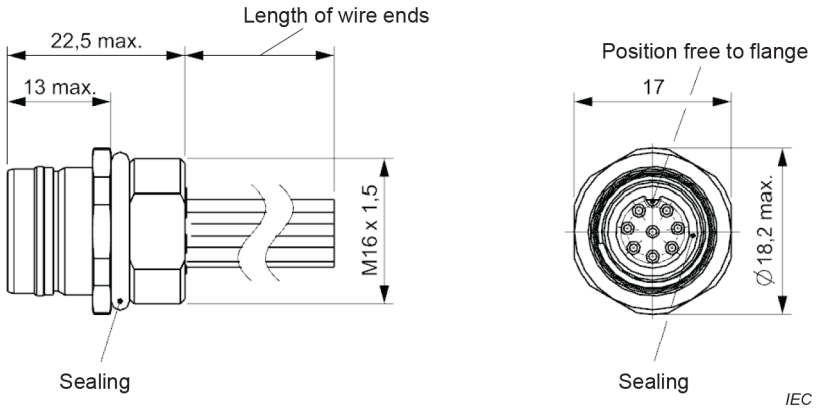

Figure 5 – Fixed connector, female contacts, with M12 screw locking and outer push-pull locking, with wire ends, single hole front mounting thread M16 × 1,5

5.2.2.7 Style FF-OP

Figure 6 shows a fixed connector, female contacts, with M12 screw locking and outer push-pull locking, with wire ends, single hole front mounting thread M20 × 1,5.

Dimensions in mm

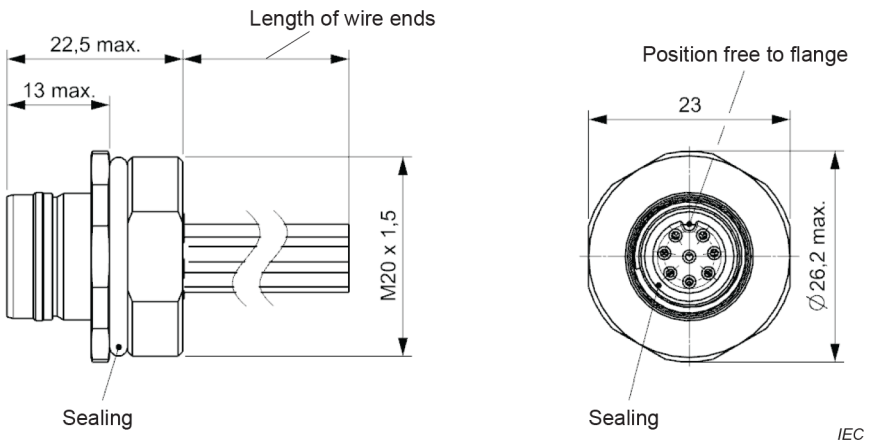

Figure 6 – Fixed connector, female contacts, with M12 screw locking and outer push-pull locking, with wire ends, single hole front mounting thread M20 × 1,5

5.2.2.8 Style GF-OP

Figure 7 shows a fixed connector, female contacts, with M12 screw locking and outer push-pull locking, with wire ends, a single hole front mounting thread M16 × 1,5 and mounting orientation.

Documents
Document Sharing Hub
Full document details: IEC 61076-2-010-2021

Dimensions in mm

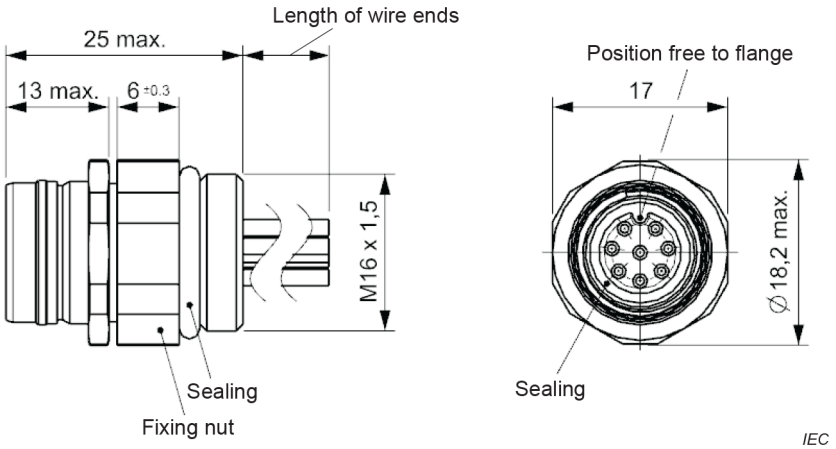

Figure 7 – Fixed connector, female contacts, with M12 screw locking and outer push-pull locking, with wire ends, single hole front mounting thread M16 × 1,5 and mounting orientation

5.2.2.9 Style IF-OP

Figure 8 shows a fixed connector, female contacts, with M12 screw locking and outer push-pull locking, with wire ends, single hole rear mounting thread M16 × 1,5.

Dimensions in mm

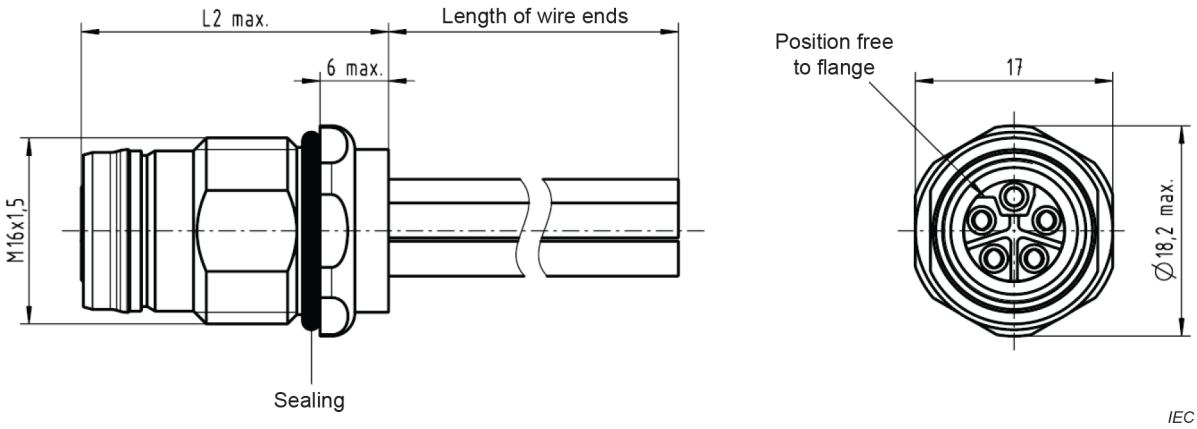

Figure 8 – Fixed connector, female contacts, with M12 screw locking and outer push-pull locking, with wire ends, single hole rear mounting thread M16 × 1,5

5.2.2.10 Style EF-IP

Figure 9 shows a fixed connector, female contacts, with M12 screw locking and inner push-pull locking, with wire ends, single hole front mounting thread M16 × 1,5.

Documents
Document Sharing Hub
Full document details: IEC 61076-2-010-2021

Dimensions in mm

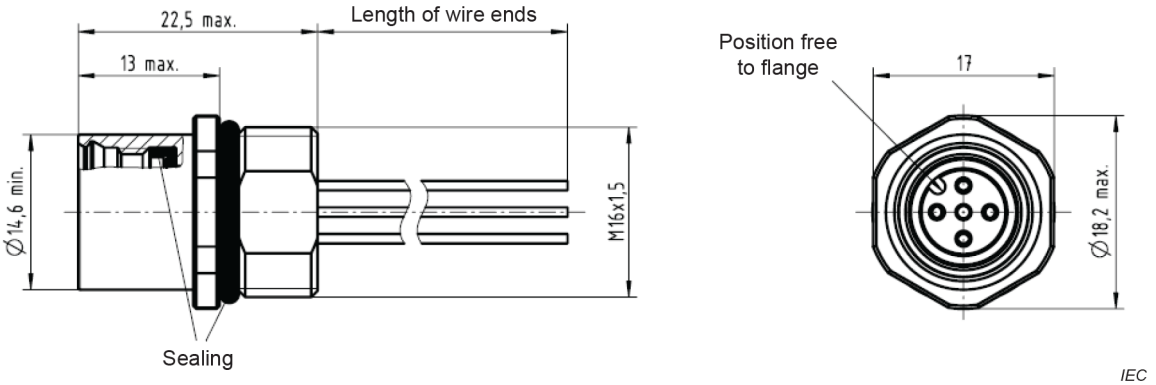

Figure 9 – Fixed connector, female contacts, with M12 screw locking and inner push-pull locking, with wire ends, single hole front mounting thread M16 × 1,5

5.2.2.11 Style FF-IP

Figure 10 shows a fixed connector, female contacts, with M12 screw locking and inner push-pull locking, with wire ends, single hole front mounting thread M20 × 1,5.

Dimensions in mm

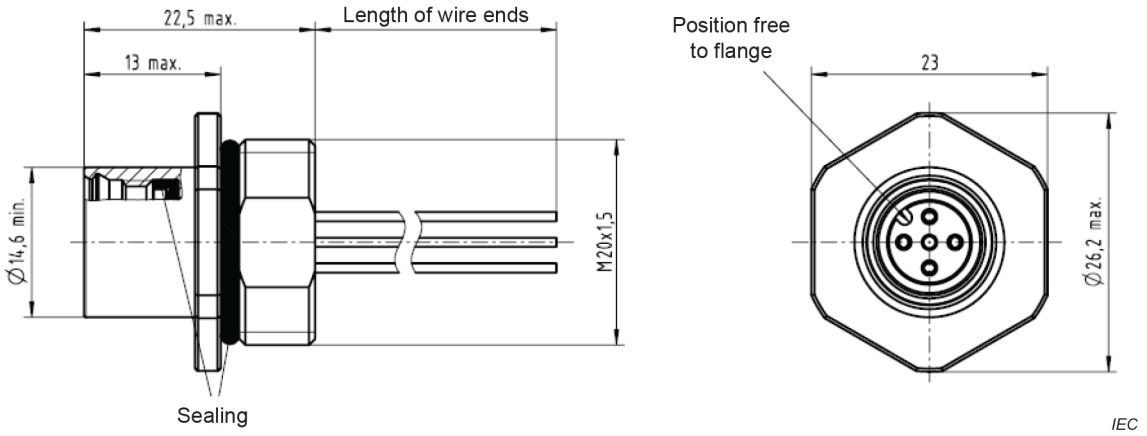

Figure 10 – Fixed connector, female contacts, with M12 screw locking and inner push-pull locking, with wire ends, single hole front mounting thread M20 × 1,5

5.2.2.12 Style GF-IP

Figure 11 shows a fixed connector, female contacts, with M12 screw locking and inner push-pull locking, with wire ends, a single hole front mounting thread M16 × 1,5 and mounting orientation.

Documents
Document Sharing Hub
Full document details: IEC 61076-2-010-2021

Dimensions in mm

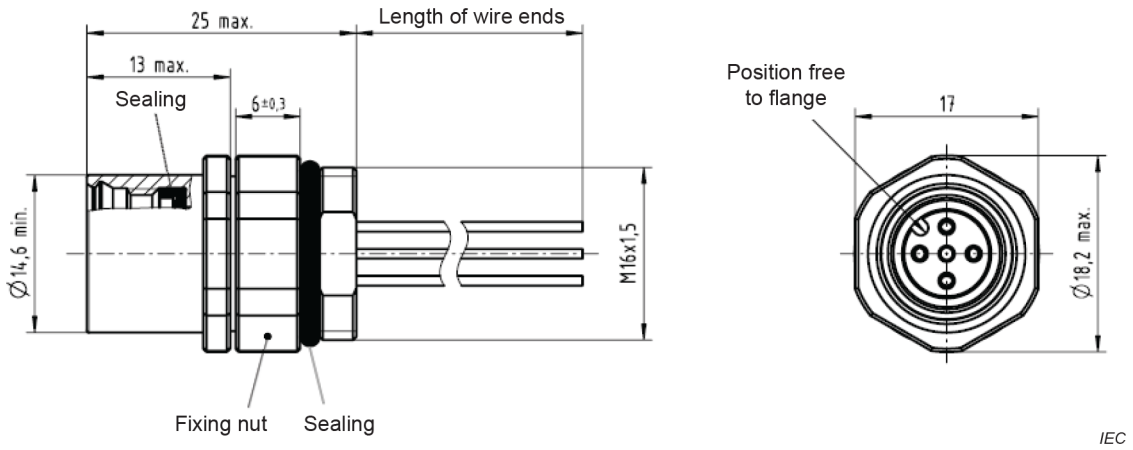

Figure 11 – Fixed connector, female contacts, with M12 screw locking and inner push-pull locking, with wire ends, single hole front mounting thread M16 × 1,5 and mounting orientation

5.2.2.13 Style IF-IP

Figure 12 shows a fixed connector, female contacts, with M12 screw locking and inner push-pull locking, with wire ends, single hole rear mounting thread M16 × 1,5.

Dimensions in mm

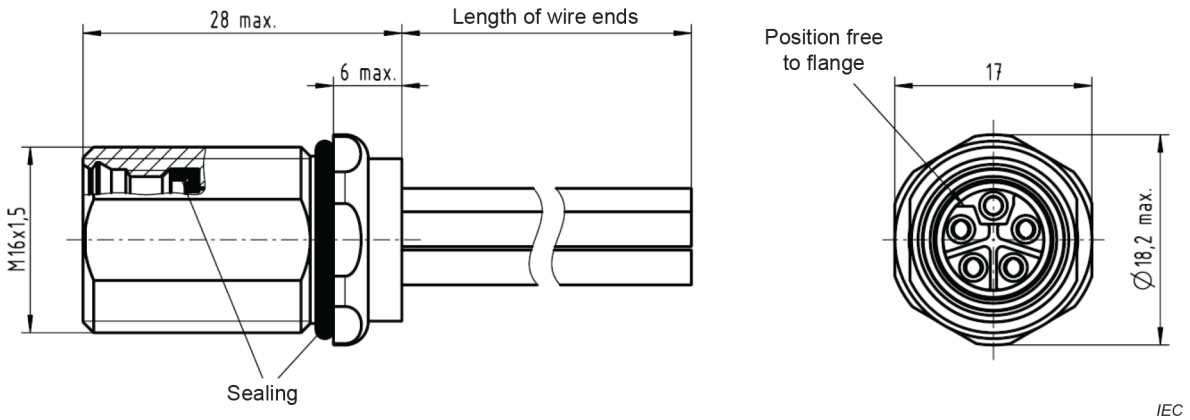

Figure 12 – Fixed connector, female contacts, with M12 screw locking and inner push-pull locking, with wire ends, single hole rear mounting thread M16 × 1,5

5.2.3 Free connectors

5.2.3.1 General

Table 4 shows the styles of free connectors.

Documents
Document Sharing Hub
Full document details: IEC 61076-2-010-2021

Table 4 – Styles of free connectors

Style	Description
JM-OP	rewirable connector, male contacts, straight version, with outer push-pull locking
KM-OP	rewirable connector, male contacts, angled version, with outer push-pull locking
LM-OP	non-rewirable connector, male contacts, straight version, with outer push-pull locking
MM-OP	non-rewirable connector, male contacts, angled version, with outer push-pull locking
JF-OP	rewirable connector, female contacts, straight version, with outer push-pull locking
KF-OP	rewirable connector, female contacts, angled version, with outer push-pull locking
LF-OP	non-rewirable connector, female contacts, straight version, with outer push-pull locking
MF-OP	non-rewirable connector, female contacts, angled version, with outer push-pull locking
JM-IP	rewirable connector, male contacts, straight version, with inner push-pull locking
KM-IP	rewirable connector, male contacts, angled version, with inner push-pull locking
LM-IP	non-rewirable connector, male contacts, straight version with inner push-pull locking.
MM-IP	non-rewirable connector, male contacts, angled version, with inner push-pull locking

NOTE Style name xy-zw where x = J, K, L, or M; according to style features, y = M (male contacts) or F (female contacts), zw = OP (outer push-pull) or IP = (inner push-pull).

5.2.3.2 Style JM-OP

Figure 13 shows a rewirable connector, male contacts, straight version, with outer push-pull locking. Table 5 shows the different dimensions of style JM-OP.

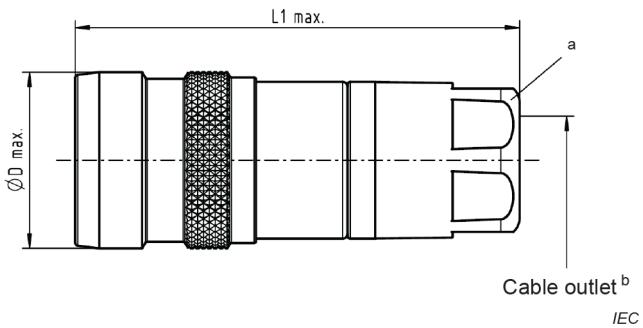

[a] Cable outlet alternatively inside.

[b] Cable outlet diameter range upon agreement.

Figure 13 – Rewirable connector, male contacts, straight version, with outer push-pull locking

Table 5 – Dimensions of style JM-OP, Figure 13

Dimensions in millimetres

Coding	L1 max.	ØD max.
A, B, C, D, P	65	22
X, H	65	22
F, K, L, M	70	25
S, T	70	23
Type 1 to 4	65	22

Documents
Document Sharing Hub
Full document details: IEC 61076-2-010-2021

5.2.3.3 Style KM-OP

Figure 14 shows a rewirable connector, male contacts, angled version, with outer push-pull locking. Table 6 shows the dimensions for style KM-OP.

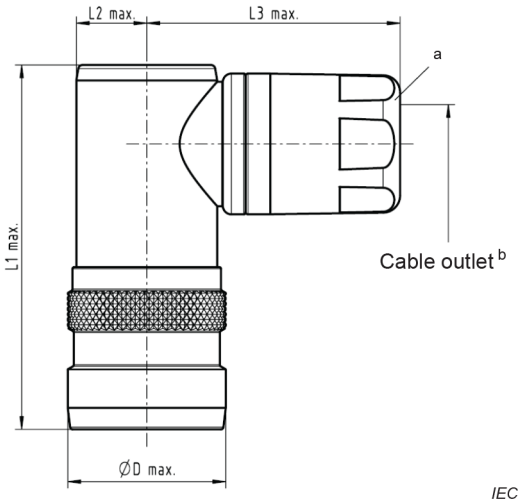

[a] Cable outlet alternatively inside.

[b] Cable outlet diameter range upon agreement.

Figure 14 – Rewirable connector, male contacts, angled version, with outer push-pull locking

Table 6 – Dimensions of style KM-OP, Figure 14

Dimensions in millimetres

Coding	L1 max.	L2 max.	L3 max.	ØD max.
A, B, C, D, P	60,5	11	31,5	22
X, H	60,5	11	31,5	22
F, K, L, M	80	14	40	25
S, T	80	13	40	23
Type 1 to 4	60,5	11	31,5	22

5.2.3.4 Style LM-OP

Figure 15 shows a non-rewirable connector, male contacts, straight version, with outer push-pull locking. Table 7 shows the dimensions of style LM-OP.

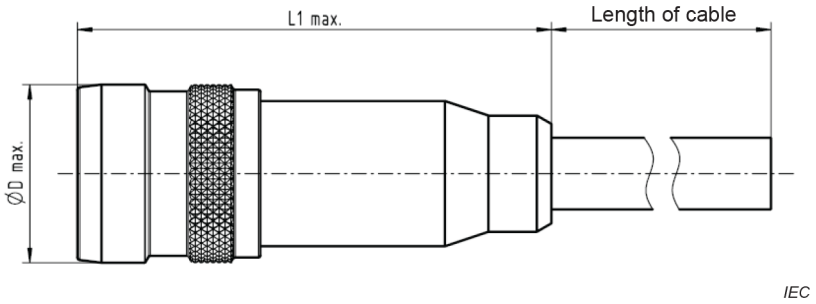

Figure 15 – Non-rewirable connector, male contacts, straight version, with outer push pull locking

Documents
Document Sharing Hub
Full document details: IEC 61076-2-010-2021

Table 7 – Dimensions of style LM-OP, Figure 15

Dimensions in millimetres

Coding	L1 max.	ØD max.
A, B, C, D, P	55	22
X, H	55	22
F, K, L, M	65	22
S, T	57	22
Type 1 to 4	55	22

5.2.3.5 Style MM-OP

Figure 16 shows a non-rewirable connector, male contacts, angled version, with outer push-pull locking. Table 8 shows the dimensions of style MM-OP.

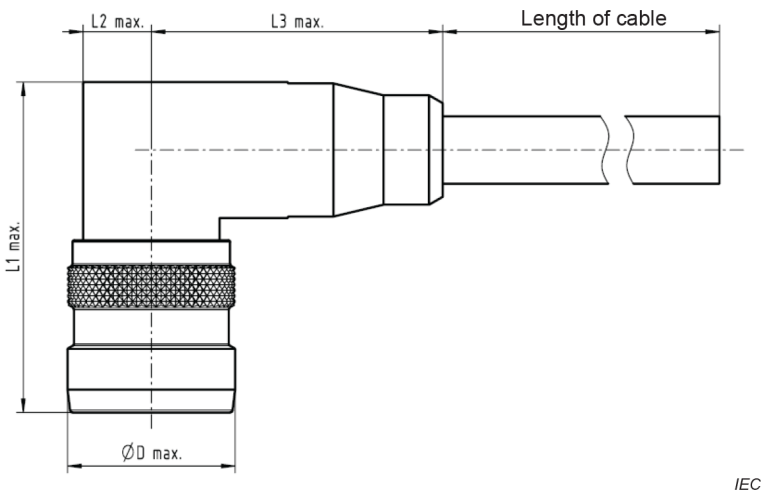

Figure 16 – Non-rewirable connector, male contacts, angled version, with outer push-pull locking

Table 8 – Dimensions of style MM-OP, Figure 16

Dimensions in millimetres

Coding	L1 max.	L2 max.	L3 max.	ØD max.
A, B, C, D, P	36	7,5	31,5	22
X, H	36	7,5	31,5	22
F, K, L, M	41	9	40	22
S, T	36	8	33,5	22
Type 1 to 4	36	7,5	31,5	22

5.2.3.6 Style JF-OP

Figure 17 shows a rewirable connector, female contacts, straight version, with outer push-pull locking. Table 9 shows the dimensions of style JF-OP.

Documents
Document Sharing Hub
Full document details: IEC 61076-2-010-2021

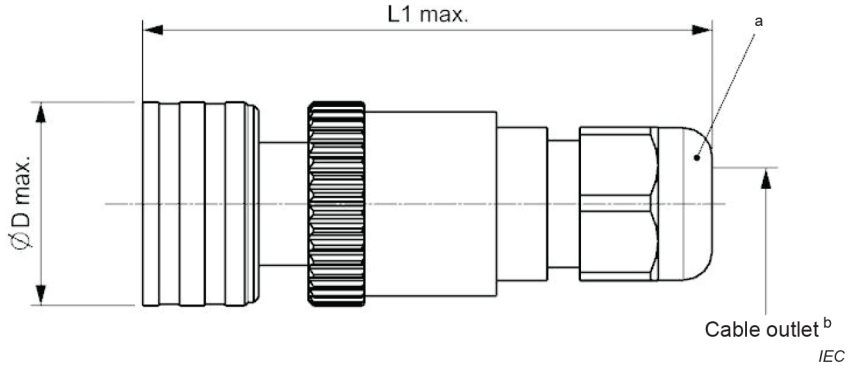

[a] Cable outlet alternatively inside.

[b] Cable outlet diameter range upon agreement.

Figure 17 – Rewirable connector, female contacts, straight version, with outer push-pull locking

Table 9 – Dimensions of style JF-OP, Figure 17

Dimensions in millimetres

Coding	L1 max.	ØD max.
A, B, C, D, P	65	22
X, H	65	22
F, K, L, M	70	25
S, T	70	23
Type 1 to 4	65	22

5.2.3.7 Style KF-OP

Figure 18 shows a rewirable connector, female contacts, angled version, with outer push-pull locking. Table 10 shows the dimensions of style KF-OP.

Documents
Document Sharing Hub
Full document details: IEC 61076-2-010-2021

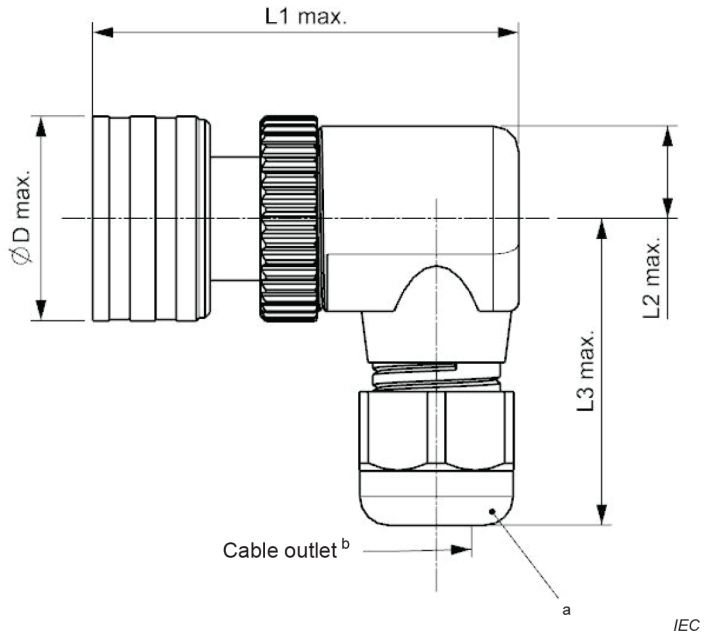

[a] Cable outlet alternatively inside.

[b] Cable outlet diameter range upon agreement.

Figure 18 – Rewirable connector, female contacts, angled version, with outer push-pull locking

Table 10 – Dimensions of style KF-OP, Figure 18

Dimensions in millimetres

Coding	L1 max.	L2 max.	L3 max.	ØD max.
A, B, C, D, P	60,5	11	31,5	22
X, H	60,5	11	31,5	22
F, K, L, M	80	14	40	25
S, T	80	13	40	23
Type 1 to 4	60,5	11	31,5	22

5.2.3.8 Style LF-OP

Figure 19 shows a non-rewirable connector, female contacts, straight version, with outer push-pull locking. Table 11 shows the dimensions of style LF-OP.

Documents
Document Sharing Hub
Full document details: IEC 61076-2-010-2021

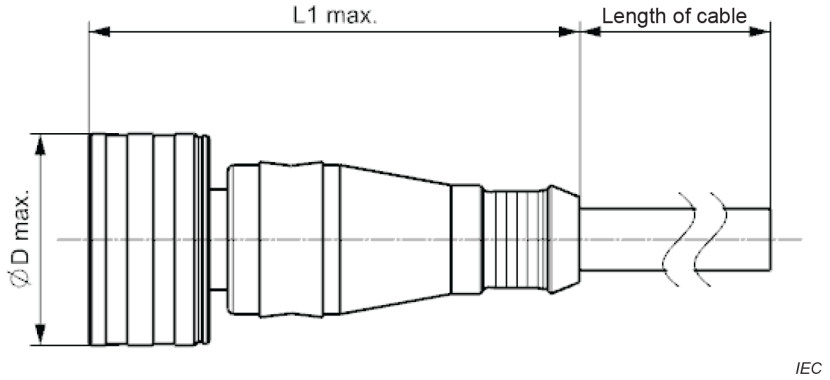

Figure 19 – Non-rewirable connector, female contacts, straight version, with outer push-pull locking

Table 11 – Dimensions of style LF-OP, Figure 19

Dimensions in millimetres

Coding	L1 max.	ØD max.
A, B, C, D, P	55	22
X, H	55	22
F, K, L, M	65	22
S, T	57	22
Type 1 to 4	55	22

5.2.3.9 Style MF-OP

Figure 20 shows a non-rewirable connector, with female contacts, angled version, with outer push-pull locking. Table 12 shows the dimensions of style MF-OP.

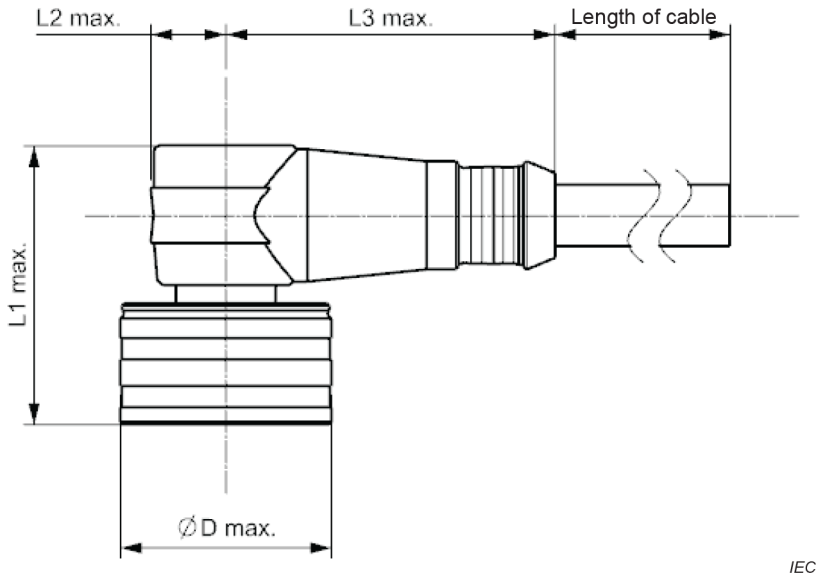

Figure 20 – Non-rewirable connector, female contacts, angled version, with outer push-pull locking

Documents
Document Sharing Hub
Full document details: IEC 61076-2-010-2021

Table 12 – Dimensions of style MF-OP, Figure 20

Dimensions in millimetres

Coding	L1 max.	L2 max.	L3 max.	ØD max.
A, B, C, D, P	36	7,5	31,5	22
X, H	36	7,5	31,5	22
F, K, L, M	41	9	40	22
S, T	36	8	33,5	22
Type 1 to 4	36	7,5	31,5	22

5.2.3.10 Style JM-IP

Figure 21 shows a rewirable connector, male contacts, straight version, with inner push-pull locking. Table 13 shows the dimensions of style JM-IP.

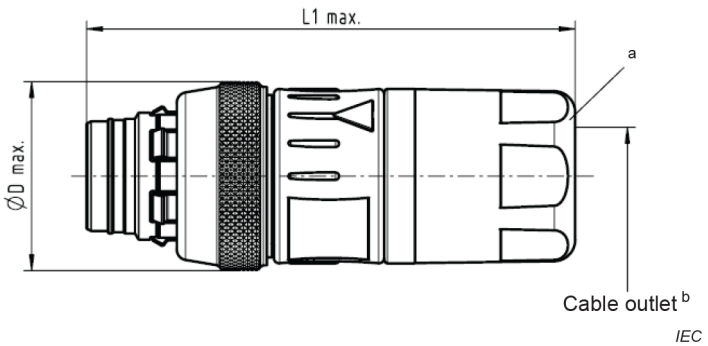

[a] Cable outlet alternatively inside.

[b] Cable outlet diameter range upon agreement.

Figure 21 – Rewirable connector, male contacts, straight version, with inner push-pull locking

Table 13 – Dimensions of style JM-IP, Figure 21

Dimensions in millimetres

Coding	L1 max.	ØD max.
A, B, C, D, P	65	22
X, H	65	22
K, L, M	70	25
S, T	70	23
Type 1 to 4	65	22

5.2.3.11 Style KM-IP

Figure 22 shows a rewirable connector, male contacts, angled version, with inner push-pull locking. Table 14 shows the dimensions of style KM-IP.

Documents
Document Sharing Hub
Full document details: IEC 61076-2-010-2021

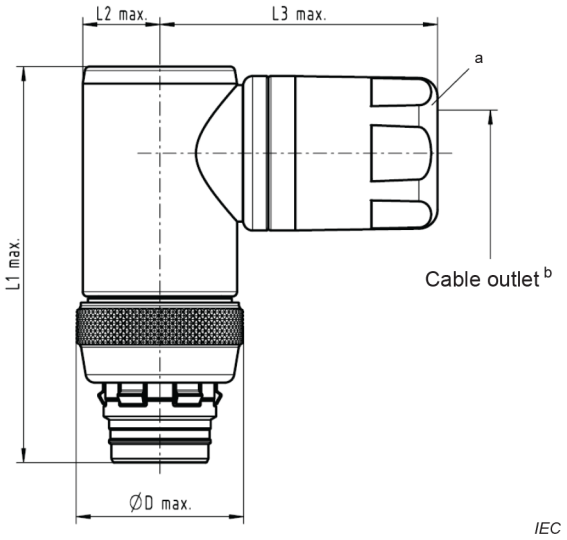

[a] Cable outlet alternatively inside.

[b] Cable outlet diameter range upon agreement.

Figure 22 – Rewirable connector, male contacts, angled version, with inner push-pull locking

Table 14 – Dimensions of style KM-IP, Figure 22

Dimensions in millimetres

Coding	L1 max.	L2 max.	L3 max.	ØD max.
A, B, C, D, P	60,5	11	31,5	22
X, H	60,5	11	31,5	22
K, L, M	80	14	40	25
S, T	80	13	40	23
Type 1 to 4	60,5	11	31,5	22

5.2.3.12 Style LM-IP

Figure 23 shows a non-rewirable connector, male contacts, straight version, with inner push-pull locking. Table 15 shows the dimensions of style LM-IP.

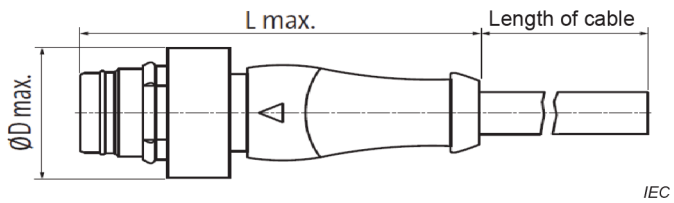

Figure 23 – Non-rewirable connector, male contacts, straight version, with inner push-pull locking

Documents
Document Sharing Hub
Full document details: IEC 61076-2-010-2021