IEC 61076-2-011

Edition 1.0 2021-06

INTERNATIONAL STANDARD

NORME INTERNATIONALE

Connectors for electrical and electronic equipment – Product requirements – Part 2-011: Circular connectors – Detail specification for B12 bayonet coupling connectors based on mating interfaces according to IEC 61076-2-101 and IEC 61076-2-109

Connecteurs pour équipements électriques et électroniques – Exigences de produit – Partie 2-011: Connecteurs circulaires – Spécification particulière pour les connecteurs à accouplement à baïonnette B12 basés sur des interfaces d'accouplement conformes à l'IEC 61076-2-101 et l'IEC 61076-2-109

IEC 61076-2-011:2021-06(en-fr)

Documents
Document Sharing Hub
Full document details: IEC 61076-2-011-2021

THIS PUBLICATION IS COPYRIGHT PROTECTED
Copyright © 2021 IEC, Geneva, Switzerland

All rights reserved. Unless otherwise specified, no part of this publication may be reproduced or utilized in any form or by any means, electronic or mechanical, including photocopying and microfilm, without permission in writing from either IEC or IEC's member National Committee in the country of the requester. If you have any questions about IEC copyright or have an enquiry about obtaining additional rights to this publication, please contact the address below or your local IEC member National Committee for further information.

Droits de reproduction réservés. Sauf indication contraire, aucune partie de cette publication ne peut être reproduite ni utilisée sous quelque forme que ce soit et par aucun procédé, électronique ou mécanique, y compris la photocopie et les microfilms, sans l'accord écrit de l'IEC ou du Comité national de l'IEC du pays du demandeur. Si vous avez des questions sur le copyright de l'IEC ou si vous désirez obtenir des droits supplémentaires sur cette publication, utilisez les coordonnées ci-après ou contactez le Comité national de l'IEC de votre pays de résidence.

IEC Central Office
3, rue de Varembé
CH-1211 Geneva 20
Switzerland

Tel.: +41 22 919 02 11
info@iec.ch
www.iec.ch

About the IEC
The International Electrotechnical Commission (IEC) is the leading global organization that prepares and publishes International Standards for all electrical, electronic and related technologies.

About IEC publications
The technical content of IEC publications is kept under constant review by the IEC. Please make sure that you have the latest edition, a corrigendum or an amendment might have been published.

IEC publications search - webstore.iec.ch/advsearchform
The advanced search enables to find IEC publications by a variety of criteria (reference number, text, technical committee, …). It also gives information on projects, replaced and withdrawn publications.

IEC Just Published - webstore.iec.ch/justpublished
Stay up to date on all new IEC publications. Just Published details all new publications released. Available online and once a month by email.

IEC Customer Service Centre - webstore.iec.ch/csc
If you wish to give us your feedback on this publication or need further assistance, please contact the Customer Service Centre: sales@iec.ch.

IEC online collection - oc.iec.ch
Discover our powerful search engine and read freely all the publications previews. With a subscription you will always have access to up to date content tailored to your needs.

Electropedia - www.electropedia.org
The world's leading online dictionary on electrotechnology, containing more than 22 000 terminological entries in English and French, with equivalent terms in 18 additional languages. Also known as the International Electrotechnical Vocabulary (IEV) online.

A propos de l'IEC
La Commission Electrotechnique Internationale (IEC) est la première organisation mondiale qui élabore et publie des Normes internationales pour tout ce qui a trait à l'électricité, à l'électronique et aux technologies apparentées.

A propos des publications IEC
Le contenu technique des publications IEC est constamment revu. Veuillez vous assurer que vous possédez l'édition la plus récente, un corrigendum ou amendement peut avoir été publié.

Recherche de publications IEC - webstore.iec.ch/advsearchform
La recherche avancée permet de trouver des publications IEC en utilisant différents critères (numéro de référence, texte, comité d'études, …). Elle donne aussi des informations sur les projets et les publications remplacées ou retirées.

IEC Just Published - webstore.iec.ch/justpublished
Restez informé sur les nouvelles publications IEC. Just Published détaille les nouvelles publications parues. Disponible en ligne et une fois par mois par email.

Service Clients - webstore.iec.ch/csc
Si vous désirez nous donner des commentaires sur cette publication ou si vous avez des questions contactez-nous: sales@iec.ch.

IEC online collection - oc.iec.ch
Découvrez notre puissant moteur de recherche et consultez gratuitement tous les aperçus des publications. Avec un abonnement, vous aurez toujours accès à un contenu à jour adapté à vos besoins.

Electropedia - www.electropedia.org
Le premier dictionnaire d'électrotechnologie en ligne au monde, avec plus de 22 000 articles terminologiques en anglais et en français, ainsi que les termes équivalents dans 16 langues additionnelles. Egalement appelé Vocabulaire Electrotechnique International (IEV) en ligne.

AVA Documents
Document Sharing Hub

Full document details: IEC 61076-2-011-2021

IEC 61076-2-011

Edition 1.0 2021-06

INTERNATIONAL STANDARD

NORME INTERNATIONALE

Connectors for electrical and electronic equipment – Product requirements – Part 2-011: Circular connectors – Detail specification for B12 bayonet coupling connectors based on mating interfaces according to IEC 61076-2-101 and IEC 61076-2-109

Connecteurs pour équipements électriques et électroniques – Exigences de produit – Partie 2-011: Connecteurs circulaires – Spécification particulière pour les connecteurs à accouplement à baïonnette B12 basés sur des interfaces d'accouplement conformes à l'IEC 61076-2-101 et l'IEC 61076-2-109

INTERNATIONAL
ELECTROTECHNICAL
COMMISSION

COMMISSION
ELECTROTECHNIQUE
INTERNATIONALE

ICS 31.220.10

ISBN 978-2-8322-9924-1

Warning! Make sure that you obtained this publication from an authorized distributor.
Attention! Veuillez vous assurer que vous avez obtenu cette publication via un distributeur agréé.

® Registered trademark of the International Electrotechnical Commission
Marque déposée de la Commission Electrotechnique Internationale

AVA Documents
Document Sharing Hub

Full document details: IEC 61076-2-011-2021

CONTENTS

FOREWORD 3
INTRODUCTION 5
1 Scope 6
2 Normative references 6
3 Terms and definitions 7
4 Technical information 7
4.1 Recommended method of termination 7
4.1.1 General 7
4.1.2 Number of contacts or contact cavities 7
4.2 Ratings and characteristics 7
4.3 Marking 7
4.4 Safety aspects 7
5 Dimensions 7
5.1 General 7
5.2 Survey of styles and variants 7
5.3 Interface dimensions for connectors 8
5.3.1 Interface dimensions for fixed connector 8
5.3.2 Interface dimensions for free connector 9
5.3.3 Pin front view of connectors and contact position 10
5.4 Engagement (mating) information 10
6 Characteristics 10
6.1 Climatic category 10
6.2 Mechanical 10
7 Test schedule 10
Annex A (informative) Diameter of the female connector body 11
Annex B (informative) Contact and pair designation for balanced cabling 12

Figure 1 – Coupling dimensions for fixed connectors 8
Figure 2 – Coupling dimensions for free cable connectors 9

Table 1 – Coupling dimensions, fixed connector 9
Table 2 – Coupling dimensions, free cable connector 9

Documents
Document Sharing Hub

Full document details: IEC 61076-2-011-2021

INTERNATIONAL ELECTROTECHNICAL COMMISSION

CONNECTORS FOR ELECTRICAL AND ELECTRONIC EQUIPMENT – PRODUCT REQUIREMENTS –

Part 2-011: Circular connectors – Detail specification for B12 bayonet coupling connectors based on mating interfaces according to IEC 61076-2-101 and IEC 61076-2-109

FOREWORD

1) The International Electrotechnical Commission (IEC) is a worldwide organization for standardization comprising all national electrotechnical committees (IEC National Committees). The object of IEC is to promote international co-operation on all questions concerning standardization in the electrical and electronic fields. To this end and in addition to other activities, IEC publishes International Standards, Technical Specifications, Technical Reports, Publicly Available Specifications (PAS) and Guides (hereafter referred to as "IEC Publication(s)"). Their preparation is entrusted to technical committees; any IEC National Committee interested in the subject dealt with may participate in this preparatory work. International, governmental and non-governmental organizations liaising with the IEC also participate in this preparation. IEC collaborates closely with the International Organization for Standardization (ISO) in accordance with conditions determined by agreement between the two organizations.
2) The formal decisions or agreements of IEC on technical matters express, as nearly as possible, an international consensus of opinion on the relevant subjects since each technical committee has representation from all interested IEC National Committees.
3) IEC Publications have the form of recommendations for international use and are accepted by IEC National Committees in that sense. While all reasonable efforts are made to ensure that the technical content of IEC Publications is accurate, IEC cannot be held responsible for the way in which they are used or for any misinterpretation by any end user.
4) In order to promote international uniformity, IEC National Committees undertake to apply IEC Publications transparently to the maximum extent possible in their national and regional publications. Any divergence between any IEC Publication and the corresponding national or regional publication shall be clearly indicated in the latter.
5) IEC itself does not provide any attestation of conformity. Independent certification bodies provide conformity assessment services and, in some areas, access to IEC marks of conformity. IEC is not responsible for any services carried out by independent certification bodies.
6) All users should ensure that they have the latest edition of this publication.
7) No liability shall attach to IEC or its directors, employees, servants or agents including individual experts and members of its technical committees and IEC National Committees for any personal injury, property damage or other damage of any nature whatsoever, whether direct or indirect, or for costs (including legal fees) and expenses arising out of the publication, use of, or reliance upon, this IEC Publication or any other IEC Publications.
8) Attention is drawn to the Normative references cited in this publication. Use of the referenced publications is indispensable for the correct application of this publication.
9) Attention is drawn to the possibility that some of the elements of this IEC Publication may be the subject of patent rights. IEC shall not be held responsible for identifying any or all such patent rights.

International Standard IEC 61076-2-011 has been prepared by subcommittee 48B: Electrical connectors, of IEC technical committee 48: Electrical connectors and mechanical structures for electrical and electronic equipment.

The text of this standard is based on the following documents:

FDIS	Report on voting
48B/2883/FDIS	48B/2892/RVD

Full information on the voting for its approval can be found in the report on voting indicated in the above table.

The language used for the development of this International Standard is English.

Documents
Document Sharing Hub

Full document details: IEC 61076-2-011-2021

This document was drafted in accordance with ISO/IEC Directives, Part 2, and developed in accordance with ISO/IEC Directives, Part 1 and ISO/IEC Directives, IEC Supplement, available at www.iec.ch/members_experts/refdocs. The main document types developed by IEC are described in greater detail at www.iec.ch/standardsdev/publications.

A list of all parts in the IEC 61076 series, published under the general title *Connectors for electrical and electronic equipment – Product requirements*, can be found on the IEC website.

The committee has decided that the contents of this document will remain unchanged until the stability date indicated on the IEC website under webstore.iec.ch in the data related to the specific document. At this date, the document will be

- reconfirmed,
- withdrawn,
- replaced by a revised edition, or
- amended.

Documents
Document Sharing Hub

Full document details: IEC 61076-2-011-2021

INTRODUCTION

This document describes the fixed and free cable connector coupling interface for circular connectors. In addition to dimensional definitions, reference planes for existing connector mating faces have been defined. Mechanical and electrical characteristics and the corresponding test procedures are part of this generic standard. It specifies the additional dimensions for the bayonet coupling interfaces. The mating faces are not part of this document, but explicitly defined in IEC 61076-2-101 and IEC 61076-2-109.

IEC SC 48B – Electrical connectors Specification available from: IEC General secretariat or from the addresses shown on the inside cover.	IEC 61076-2-011 Ed. 1.0
DETAIL SPECIFICATION in accordance with IEC 61076-2	
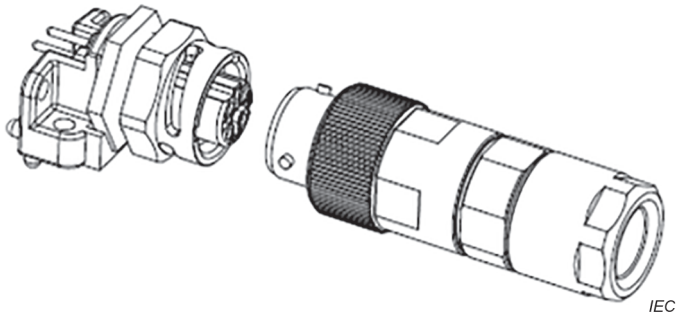 IEC	Circular connectors B12, 2 to 17 ways, for signal and data transmission with frequencies up to 500 MHz Pin and socket connectors with round contact Rewireable – Non-rewirable Free cable connectors Straight and right-angle connectors Fixed connectors Flange mounting Rear mounting Single hole mounting
The ways and coding shown are only given as an example.	

Documents
Document Sharing Hub

Full document details: IEC 61076-2-011-2021

CONNECTORS FOR ELECTRICAL AND ELECTRONIC EQUIPMENT – PRODUCT REQUIREMENTS –

Part 2-011: Circular connectors – Detail specification for B12 bayonet coupling connectors based on mating interfaces according to IEC 61076-2-101 and IEC 61076-2-109

1 Scope

This part of IEC 61076-2 describes the bayonet coupling interface of circular connectors that are typically used for industrial process measurement and control. These connectors consist of fixed and free connectors either rewireable or non-rewireable, with bayonet-coupling. These connectors may have glass to metal seal inserts. They have male or female contacts and are deemed to be intermateable with corresponding free connectors produced according to this document. Male connectors have round contacts Ø 0,6 mm, Ø 0,76 mm, Ø 0,8 mm and Ø 1,0 mm.

Different codings prevent the mating of these individually coded fixed connectors (and consequently of individually coded free connectors deemed to couple with them) to other interfaces and cross-mating between the different codings. However, the styles and interface dimensions, except for the coupling mechanism, are as given in 4.3 of IEC 61076-2- 101:2012 and 4.3.1 of IEC 61076-2-109:2014.

The male type B12 circular connectors are interoperable with the female type B12 connector of the same coding and ways. The female type B12 connectors are interoperable with the male type B12 and M12 (threaded screw coupling) connector of the same coding and ways.

NOTE B12 relates to a bayonet coupling with tube dimensions compatible with a M12 thread. M12 is the dimension of the thread of the screw-coupling mechanism of circular connectors covered by IEC 61076-2-101 and IEC 61076-2-109, which provide the mating interface (connector insert level) to these connectors with bayonet coupling.

2 Normative references

The following documents are referred to in the text in such a way that some or all of their content constitutes requirements of this document. For dated references, only the edition cited applies. For undated references, the latest edition of the referenced document (including any amendments) applies.

IEC 60050-581:2008, *International Electrotechnical Vocabulary (IEV) – Part 581: Electromechanical components for electronic equipment*

IEC 61076-2:2011, *Connectors for electronic equipment – Product requirements – Part 2: Sectional specification for circular connectors*

IEC 61076-2-101:2012, *Connectors for electronic equipment – Product requirements – Part 2-101: Circular connectors – Detail specification for M12 connectors with screw-locking*

IEC 61076-2-109:2014, *Connectors for electronic equipment – Product requirements – Part 2-109: Circular connectors – Detail specification for connectors with M 12 x 1 screw-locking, for data transmission frequencies up to 500 MHz*

IEC 61984:2008, *Connectors – Safety requirements and tests*

Documents
Document Sharing Hub

Full document details: IEC 61076-2-011-2021

3 Terms and definitions

For the purposes of this document, the terms and definitions given in IEC 60050-581 apply.

ISO and IEC maintain terminological databases for use in standardization at the following addresses:

- IEC Electropedia: available at http://www.electropedia.org/
- ISO Online browsing platform: available at http://www.iso.org/obp

4 Technical information

4.1 Recommended method of termination

4.1.1 General

Subclause 3.2.1 of IEC 61076-2-101:2012 shall apply. See also Annex B.

4.1.2 Number of contacts or contact cavities

Subclause 3.2.2 of IEC 61076-2-101:2012 or IEC 61076-2-109:2014 shall apply.

4.2 Ratings and characteristics

Subclause 3.3 of IEC 61076-2-101:2012 or IEC 61076-2-109:2014 shall apply.

4.3 Marking

The marking of the connector and the package shall be in accordance with 2.6 of IEC 61076-2:2011.

4.4 Safety aspects

IEC 61984 shall be applicable to connectors without breaking capacity (COC) where relevant.

5 Dimensions

5.1 General

Dimensions in mm shall be as stated in the relevant figure. Dimensions not given shall be appropriate to the connectors application and use. They shall be such that any specified dimensions are unaffected.

The missing interface dimensions of the female styles shall be chosen according to the common characteristics of the male styles. See also Annex A.

All drawing views are given in first angle projection. The shape of the connectors may deviate from that given, provided that the specified dimensions are unaffected.

5.2 Survey of styles and variants

Subclause 4.2 of IEC 61076-2-101:2012 shall apply.

Documents
Document Sharing Hub

Full document details: IEC 61076-2-011-2021