# IEC 61076-2-115

Edition 1.0 2023-05

# INTERNATIONAL STANDARD

# NORME INTERNATIONALE

## Connectors for electrical and electronic equipment – Product requirements – Part 2-115: Circular connectors – Detail specification for 12-pole shielded connectors with 2 A rated current and IP65/IP67 metal housing with push-pull locking

## Connecteurs pour équipements électriques et électroniques – Exigences de produit – Partie 2-115: Connecteurs circulaires – Spécification particulière relative aux connecteurs blindés à 12 pôles avec un courant assigné de 2 A et un boîtier métallique IP65/IP67 équipé d'un mécanisme de verrouillage de type pousser-tirer

IEC 61076-2-115:2023-05(en-fr)

Documents
Document Sharing Hub
Full document details: IEC 61076-2-115-2023

**THIS PUBLICATION IS COPYRIGHT PROTECTED**
**Copyright © 2023 IEC, Geneva, Switzerland**

All rights reserved. Unless otherwise specified, no part of this publication may be reproduced or utilized in any form or by any means, electronic or mechanical, including photocopying and microfilm, without permission in writing from either IEC or IEC's member National Committee in the country of the requester. If you have any questions about IEC copyright or have an enquiry about obtaining additional rights to this publication, please contact the address below or your local IEC member National Committee for further information.

Droits de reproduction réservés. Sauf indication contraire, aucune partie de cette publication ne peut être reproduite ni utilisée sous quelque forme que ce soit et par aucun procédé, électronique ou mécanique, y compris la photocopie et les microfilms, sans l'accord écrit de l'IEC ou du Comité national de l'IEC du pays du demandeur. Si vous avez des questions sur le copyright de l'IEC ou si vous désirez obtenir des droits supplémentaires sur cette publication, utilisez les coordonnées ci-après ou contactez le Comité national de l'IEC de votre pays de résidence.

IEC Secretariat
3, rue de Varembé
CH-1211 Geneva 20
Switzerland

Tel.: +41 22 919 02 11
info@iec.ch
www.iec.ch

**About the IEC**
The International Electrotechnical Commission (IEC) is the leading global organization that prepares and publishes International Standards for all electrical, electronic and related technologies.

**About IEC publications**
The technical content of IEC publications is kept under constant review by the IEC. Please make sure that you have the latest edition, a corrigendum or an amendment might have been published.

**IEC publications search - webstore.iec.ch/advsearchform**
The advanced search enables to find IEC publications by a variety of criteria (reference number, text, technical committee, …). It also gives information on projects, replaced and withdrawn publications.

**IEC Just Published - webstore.iec.ch/justpublished**
Stay up to date on all new IEC publications. Just Published details all new publications released. Available online and once a month by email.

**IEC Customer Service Centre - webstore.iec.ch/csc**
If you wish to give us your feedback on this publication or need further assistance, please contact the Customer Service Centre: sales@iec.ch.

**IEC Products & Services Portal - products.iec.ch**
Discover our powerful search engine and read freely all the publications previews. With a subscription you will always have access to up to date content tailored to your needs.

**Electropedia - www.electropedia.org**
The world's leading online dictionary on electrotechnology, containing more than 22 300 terminological entries in English and French, with equivalent terms in 19 additional languages. Also known as the International Electrotechnical Vocabulary (IEV) online.

---

**A propos de l'IEC**
La Commission Electrotechnique Internationale (IEC) est la première organisation mondiale qui élabore et publie des Normes internationales pour tout ce qui a trait à l'électricité, à l'électronique et aux technologies apparentées.

**A propos des publications IEC**
Le contenu technique des publications IEC est constamment revu. Veuillez vous assurer que vous possédez l'édition la plus récente, un corrigendum ou amendement peut avoir été publié.

**Recherche de publications IEC - webstore.iec.ch/advsearchform**
La recherche avancée permet de trouver des publications IEC en utilisant différents critères (numéro de référence, texte, comité d'études, …). Elle donne aussi des informations sur les projets et les publications remplacées ou retirées.

**IEC Just Published - webstore.iec.ch/justpublished**
Restez informé sur les nouvelles publications IEC. Just Published détaille les nouvelles publications parues. Disponible en ligne et une fois par mois par email.

**Service Clients - webstore.iec.ch/csc**
Si vous désirez nous donner des commentaires sur cette publication ou si vous avez des questions contactez-nous: sales@iec.ch.

**IEC Products & Services Portal - products.iec.ch**
Découvrez notre puissant moteur de recherche et consultez gratuitement tous les aperçus des publications. Avec un abonnement, vous aurez toujours accès à un contenu à jour adapté à vos besoins.

**Electropedia - www.electropedia.org**
Le premier dictionnaire d'électrotechnologie en ligne au monde, avec plus de 22 300 articles terminologiques en anglais et en français, ainsi que les termes équivalents dans 19 langues additionnelles. Egalement appelé Vocabulaire Electrotechnique International (IEV) en ligne.

---

AVA Documents
Document Sharing Hub

Full document details: IEC 61076-2-115-2023

# IEC 61076-2-115

Edition 1.0 2023-05

# INTERNATIONAL STANDARD

# NORME INTERNATIONALE

## Connectors for electrical and electronic equipment – Product requirements – Part 2-115: Circular connectors – Detail specification for 12-pole shielded connectors with 2 A rated current and IP65/IP67 metal housing with push-pull locking

## Connecteurs pour équipements électriques et électroniques – Exigences de produit – Partie 2-115: Connecteurs circulaires – Spécification particulière relative aux connecteurs blindés à 12 pôles avec un courant assigné de 2 A et un boîtier métallique IP65/IP67 équipé d'un mécanisme de verrouillage de type pousser-tirer

INTERNATIONAL
ELECTROTECHNICAL
COMMISSION

COMMISSION
ELECTROTECHNIQUE
INTERNATIONALE

ICS 31.220.10

ISBN 978-2-8322-7022-6

**Warning! Make sure that you obtained this publication from an authorized distributor.**
**Attention! Veuillez vous assurer que vous avez obtenu cette publication via un distributeur agréé.**

® Registered trademark of the International Electrotechnical Commission
Marque déposée de la Commission Electrotechnique Internationale

Documents
Document Sharing Hub

Full document details: IEC 61076-2-115-2023

CONTENTS

FOREWORD ..... 5
1 Scope ..... 8
2 Normative references ..... 8
3 Terms and definitions ..... 11
4 Technical information ..... 11
4.1 Recommended method of termination ..... 11
4.1.1 General ..... 11
4.1.2 Number of contacts and contact cavities ..... 11
4.2 Ratings and characteristics ..... 11
4.3 Systems of levels ..... 12
4.3.1 Performance levels ..... 12
4.3.2 Compatibility levels ..... 12
4.4 Classification into climatic categories ..... 12
4.5 Creepage and clearance distances ..... 12
4.6 Current-carrying capacity ..... 12
4.7 Marking ..... 12
5 Dimensional information ..... 12
5.1 General ..... 12
5.2 Isometric view and common features ..... 12
5.2.1 Isometric view of free connector ..... 12
5.2.2 Isometric view of fixed connector ..... 13
5.3 Free connector ..... 14
5.3.1 Dimensions ..... 14
5.3.2 Terminations ..... 15
5.4 Fixed connector ..... 15
5.4.1 Dimensions ..... 15
5.4.2 Terminations ..... 16
5.5 Mounting information for connectors ..... 16
5.6 Gauges – Sizing gauges and retention force gauges ..... 16
6 Technical characteristics ..... 16
6.1 Classification into climatic categories ..... 16
6.2 Electrical characteristics ..... 16
6.2.1 Creepage and clearance distances ..... 16
6.2.2 Voltage proof ..... 17
6.2.3 Current-carrying capacity ..... 17
6.2.4 Electrical load and temperature ..... 17
6.2.5 Contact resistance ..... 18
6.2.6 Housing electrical continuity ..... 18
6.2.7 Insulation resistance ..... 18
6.3 Mechanical characteristics ..... 18
6.3.1 Mechanical operation ..... 18
6.3.2 Effectiveness of connector coupling devices ..... 18
6.3.3 Gauge retention force (resilient contact) ..... 19
6.3.4 Engaging and separating forces ..... 19
6.3.5 Contact retention in insert ..... 19
6.3.6 Polarizing and keying method ..... 19

AVA Documents
Document Sharing Hub

Full document details: IEC 61076-2-115-2023

6.4 Dynamic stress tests ... 19
6.4.1 Vibration (sine) ... 19
6.4.2 Shock ... 20
6.4.3 Free fall (repeated) ... 20
6.4.4 IP degree of protection ... 20
6.4.5 Glow-wire flammability test method for end-products (GWEPT) ... 20
6.5 Climatic tests ... 20
6.5.1 Rapid change of temperature ... 20
6.5.2 Dry heat ... 20
6.5.3 Low temperature ... 21
6.5.4 Low air pressure ... 21
6.5.5 Damp heat, cyclic ... 21
6.5.6 Damp heat, steady state ... 21
6.5.7 Corrosion, salt mist ... 21
6.5.8 Flowing mixed gas corrosion ... 21
6.6 Environmental aspects ... 21
6.6.1 Marking of insulation material (plastic) ... 21
6.6.2 Design/use of material ... 22
7 Test schedule ... 22
7.1 General ... 22
7.2 Test schedules ... 22
7.2.1 Basic (minimum) test schedule ... 22
7.2.2 Full test schedule ... 22
7.3 Test procedures and measurement methods ... 32
7.4 Pre-conditioning ... 33
7.5 Wiring and mounting of test specimens ... 33
7.5.1 Wiring ... 33
7.5.2 Mounting ... 33

Figure 1 – Free connector ... 13
Figure 2 – Fixed connector ... 13
Figure 3 – Free connector ... 14
Figure 4 – Fixed connector ... 15
Figure 5 – Gauge for contact ... 16
Figure 6 – Current-temperature derating (0,20 mm$^2$ wire size) ... 17

Table 1 – Free connector dimensions ... 14
Table 2 – Fixed connector dimensions ... 15
Table 3 – Gauge dimensions ... 16
Table 4 – Climatic category ... 16
Table 5 – Voltage proof ... 17
Table 6 – Number of test specimens ... 22
Table 7 – Test group P ... 23
Table 8 – Test group AP ... 24
Table 9 – Test group BP ... 27
Table 10 – Test group CP ... 29

AVA Documents
Document Sharing Hub
Full document details: IEC 61076-2-115-2023

Table 11 – Test group DP ..... 30
Table 12 – Test group EP ..... 32
Table 13 – Test group GP ..... 32

Documents
Document Sharing Hub

Full document details: IEC 61076-2-115-2023

INTERNATIONAL ELECTROTECHNICAL COMMISSION

# CONNECTORS FOR ELECTRICAL AND ELECTRONIC EQUIPMENT – PRODUCT REQUIREMENTS –

## Part 2-115: Circular connectors – Detail specification for 12-pole shielded connectors with 2 A rated current and IP65/IP67 metal housing with push-pull locking

## FOREWORD

1) The International Electrotechnical Commission (IEC) is a worldwide organization for standardization comprising all national electrotechnical committees (IEC National Committees). The object of IEC is to promote international co-operation on all questions concerning standardization in the electrical and electronic fields. To this end and in addition to other activities, IEC publishes International Standards, Technical Specifications, Technical Reports, Publicly Available Specifications (PAS) and Guides (hereafter referred to as "IEC Publication(s)"). Their preparation is entrusted to technical committees; any IEC National Committee interested in the subject dealt with may participate in this preparatory work. International, governmental and non-governmental organizations liaising with the IEC also participate in this preparation. IEC collaborates closely with the International Organization for Standardization (ISO) in accordance with conditions determined by agreement between the two organizations.
2) The formal decisions or agreements of IEC on technical matters express, as nearly as possible, an international consensus of opinion on the relevant subjects since each technical committee has representation from all interested IEC National Committees.
3) IEC Publications have the form of recommendations for international use and are accepted by IEC National Committees in that sense. While all reasonable efforts are made to ensure that the technical content of IEC Publications is accurate, IEC cannot be held responsible for the way in which they are used or for any misinterpretation by any end user.
4) In order to promote international uniformity, IEC National Committees undertake to apply IEC Publications transparently to the maximum extent possible in their national and regional publications. Any divergence between any IEC Publication and the corresponding national or regional publication shall be clearly indicated in the latter.
5) IEC itself does not provide any attestation of conformity. Independent certification bodies provide conformity assessment services and, in some areas, access to IEC marks of conformity. IEC is not responsible for any services carried out by independent certification bodies.
6) All users should ensure that they have the latest edition of this publication.
7) No liability shall attach to IEC or its directors, employees, servants or agents including individual experts and members of its technical committees and IEC National Committees for any personal injury, property damage or other damage of any nature whatsoever, whether direct or indirect, or for costs (including legal fees) and expenses arising out of the publication, use of, or reliance upon, this IEC Publication or any other IEC Publications.
8) Attention is drawn to the Normative references cited in this publication. Use of the referenced publications is indispensable for the correct application of this publication.
9) Attention is drawn to the possibility that some of the elements of this IEC Publication may be the subject of patent rights. IEC shall not be held responsible for identifying any or all such patent rights.

IEC 61076-2-115 has been prepared by subcommittee 48B: Electrical connectors, of IEC technical committee 48: Electrical connectors and mechanical structures for electrical and electronic equipment. It is an International Standard.

The text of this International Standard is based on the following documents:

| Draft | Report on voting |
|---|---|
| 48B/2948/CDV | 48B/2989/RVC |

Full information on the voting for its approval can be found in the report on voting indicated in the above table.

The language used for the development of this International Standard is English.

Documents
Document Sharing Hub

This document was drafted in accordance with ISO/IEC Directives, Part 2, and developed in accordance with ISO/IEC Directives, Part 1 and ISO/IEC Directives, IEC Supplement, available at www.iec.ch/members_experts/refdocs. The main document types developed by IEC are described in greater detail at www.iec.ch/publications.

A list of all parts of IEC 61076 series, under the general title *Connectors for electrical and electronic equipment – Product requirements*, can be found on the IEC website.

Future standards in this series will carry the new general title as cited above. Titles of existing standards in this series will be updated at the time of the next edition.

The committee has decided that the contents of this document will remain unchanged until the stability date indicated on the IEC website under webstore.iec.ch in the data related to the specific document. At this date, the document will be

- reconfirmed,
- withdrawn,
- replaced by a revised edition, or
- amended.

Documents
Document Sharing Hub

Full document details: IEC 61076-2-115-2023

| **The International Electrotechnical Commission**<br>**IEC SC 48B—Electrical connectors** | | **IEC 61076-2-115 Ed.1** |
|---|---|---|
| **Detail specification in accordance with IEC 61076-2** | | |
| Free connector | 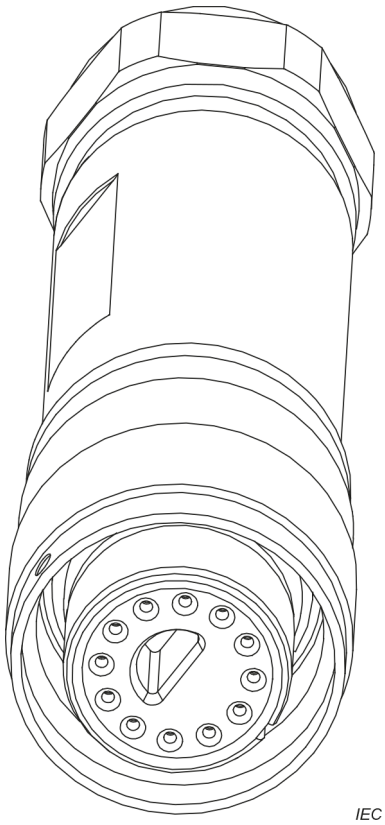 | For rated current of 2 A;<br>12-pole;<br>Female contacts;<br>Push-pull locking;<br>360° shielding. |
| Fixed connector | 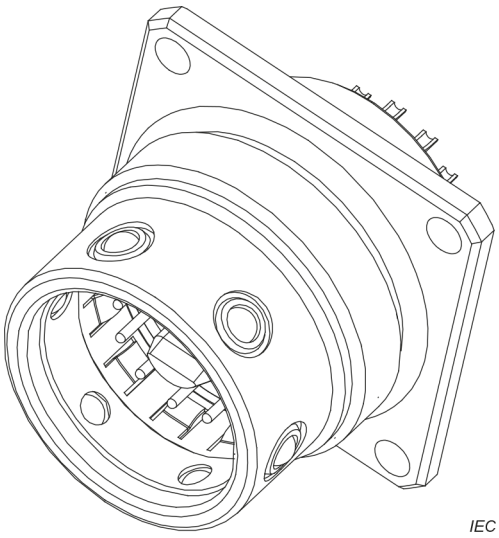 | For rated current of 2 A;<br>12-pole;<br>Male contacts;<br>Push-pull locking;<br>360° shielding. |

Documents
Document Sharing Hub
Full document details: IEC 61076-2-115-2023

# CONNECTORS FOR ELECTRICAL AND ELECTRONIC EQUIPMENT – PRODUCT REQUIREMENTS –

## Part 2-115: Circular connectors – Detail specification for 12-pole shielded connectors with 2 A rated current and IP65/IP67 metal housing with push-pull locking

## 1 Scope

This part of IEC 61076-2 describes free and fixed 12P shielded circular connectors with 2 A rated current, rated voltage up to and including 50 V AC/DC, IP65/IP67 metal housing with push-pull locking (hereinafter referred to as a connectors) for use in electrical and electronic equipment. It includes overall dimensions, interface dimensions, technical characteristics, performance requirements and test methods.

## 2 Normative references

The following documents are referred to in the text in such a way that some or all of their content constitutes requirements of this document. For dated references, only the edition cited applies. For undated references, the latest edition of the referenced document (including any amendments) applies.

IEC 60050-581, *International Electrotechnical Vocabulary (IEV) – Part 581: Electromechanical components for electronic equipment*

IEC 60068-1, *Environmental testing – Part 1: General and guidance*

IEC 60068-2-60, *Environmental testing – Part 2-60: Tests – Test Ke: Flowing mixed gas corrosion test*

IEC 60228, *Conductors of insulated cables*

IEC 60352-2, *Solderless connections – Part 2: Crimped connections – General requirements, test methods and practical guidance*

IEC 60352-3, *Solderless connections – Part 3: Accessible insulation displacement (ID) connections – General requirements, test methods and practical guidance*

IEC 60352-4, *Solderless connections – Part 4: Non-accessible insulation displacement (ID) connections – General requirements, test methods and practical guidance*

IEC 60352-5, *Solderless connections – Part 5: Press-in connections - General requirements, test methods and practical guidance*

IEC 60352-6, *Solderless connections – Part 6: Insulation piercing connections – General requirements, test methods and practical guidance*

IEC 60352-7, *Solderless connections – Part 7: Spring clamp connections – General requirements, test methods and practical guidance*

IEC 60512-1, *Connectors for electrical and electronic equipment – Tests and measurements – Part 1: Generic specification*

AVA Documents
Document Sharing Hub

Full document details: IEC 61076-2-115-2023

IEC 60512-1-1, *Connectors for electronic equipmentt – Tests and measurements – Part 1-1: General examination-Test 1a: Visual examination*

IEC 60512-1-2, *Connectors for electronic equipmentt – Tests and measurements – Part 1-2: General examination-Test 1b: Examination of dimension and mass*

IEC 60512-2-1, *Connectors for electronic equipment – Tests and measurements – Part 2-1: Electrical continuity and contact resistance tests – Test 2a: Contact resistance – Millivolt level method*

IEC 60512-2-2, *Connectors for electronic equipment – Tests and measurements – Part 2-2: Electrical continuity and contact resistance tests – Test 2b: Contact resistance – Specified test current method*

IEC 60512-2-5, *Connectors for electronic equipment – Tests and measurements – Part 2-5: Electrical continuity and contact resistance tests – Test 2e: Contact disturbance*

IEC 60512-2-6, *Connectors for electronic equipment – Tests and measurements – Part 2-6: Electrical continuity and contact resistance tests – Test 2f: Housing (shell) electrical continuity*

IEC 60512-3-1, *Connectors for electronic equipment – Tests and measurements – Part 3-1: Insulation tests – Test 3a: Insulation resistance*

IEC 60512-4-1, *Connectors for electronic equipment – Tests and measurements – Part 4-1: Voltage stress tests – Test 4a: Voltage proof*

IEC 60512-5-2, *Connectors for electronic equipment – Tests and measurements – Part 5-2: Current-carrying capacity tests – Test 5b: Current-temperature derating*

IEC 60512-6-3, *Connectors for electronic equipment – Tests and measurements – Part 6-3: Dynamic stress tests – Test 6c: Shock*

IEC 60512-6-4, *Connectors for electronic equipment – Tests and measurements – Part 6-4: Dynamic stress tests – Test 6d: Vibration (sinusoidal)*

IEC 60512-7-1, *Connectors for electronic equipment – Tests and measurements – Part 7-1: Impact tests (free connectors) – Test 7a: Free fall (repeated)*

IEC 60512-9-1, *Connectors for electronic equipment – Tests and measurements – Part 9-1: Endurance tests – Test 9a: Mechanical operation*

IEC 60512-9-2, *Connectors for electronic equipment – Tests and measurements – Part 9-2: Endurance tests – Test 9b: Electrical load and temperature*

IEC 60512-11-1, *Connectors for electrical and electronic equipment – Tests and measurements – Part 11-1: Climatic tests – Test 11a – Climatic sequence*

IEC 60512-11-3, *Connectors for electronic equipment – Tests and measurements – Part 11-3: Climatic tests – Test 11c: Damp heat, steady state*

IEC 60512-11-4, *Connectors for electronic equipment – Tests and measurements – Part 11-4: Climatic tests – Test 11d: Rapid change of temperature*

IEC 60512-11-6, *Connectors for electronic equipment – Tests and measurements – Part 11-6: Climatic tests – Test 11f: Corrosion, salt mist*

Documents
Document Sharing Hub

Full document details: IEC 61076-2-115-2023

IEC 60512-11-7, *Connectors for electronic equipment – Tests and measurements – Part 11-7: Climatic tests – Test 11g: Flowing mixed gas corrosion test*

IEC 60512-11-9, *Connectors for electronic equipment – Tests and measurements – Part 11-9: Climatic tests – Test 11i: Dry heat*

IEC 60512-11-10, *Connectors for electronic equipment – Tests and measurements – Part 11-10: Climatic tests – Test 11j: Cold*

IEC 60512-11-11, *Connectors for electronic equipment – Tests and measurements – Part 11-11: Climatic tests – Test 11k: Low air pressure*

IEC 60512-11-12, *Connectors for electronic equipment – Tests and measurements – Part 11-12: Climatic tests – Test 11m: Damp heat, cyclic*

IEC 60512-13-1, *Connectors for electronic equipment – Tests and measurements – Part 13-1: Mechanical operation tests – Test 13a: Engaging and separating forces*

IEC 60512-13-5, *Connectors for electronic equipment – Tests and measurements – Part 13-5: Mechanical operation tests – Test 13e: Polarizing and keying method*

IEC 60512-15-1, *Connectors for electronic equipment – Tests and measurements – Part 15-1: Connector tests (mechanical) – Test 15a: Contact retention in insert*

IEC 60512-15-6, *Connectors for electronic equipment – Tests and measurements – Part 15-6: Connector tests (mechanical) – Test 15f: Effectiveness of connector coupling devices*

IEC 60512-16-5, *Connectors for electronic equipment – Tests and measurements – Part 16-5: Mechanical tests on contacts and terminations – Test 16e: Gauge retention force (resilient contacts)*

IEC 60512-20-3, *Connectors for electronic equipment – Tests and measurements – Part 20-3: Fire hazard tests - Test 20c: Flammability, glow-wire*

IEC 60529:1989, *Degrees of protection provided by enclosures (IP Code)*
IEC 60529:1989/AMD1:1999
IEC 60529:1989/AMD2:2013

IEC 60664-1:2020, *Insulation coordination for equipment within low-voltage supply systems – Part 1: Principles, requirements and tests*

IEC 60695-2-11:2021, *Fire hazard testing – Part 2-11: Glowing/hot-wire based test methods – Glow-wire flammability test method for end products (GWEPT)*

IEC 60999-1, *Connecting devices – Electrical copper conductors – Safety requirements for screw-type and screwless-type clamping units – Part 1: General requirements and particular requirements for clamping units for conductors from 0,2 mm$^2$ up to 35 mm$^2$ (included)*

IEC 61076-1:2006, *Connectors for electronic equipment – Product requirements – Part 1: Generic specification*
IEC 61076-1:2006/AMD1:2019

IEC 61076-2, *Connectors for electronic equipment – Product requirements – Part 2: Sectional specification for circular connectors*

IEC 61984:2008, *Connectors – Safety requirements and tests*

Documents
Document Sharing Hub

Full document details: IEC 61076-2-115-2023

IEC 62430:2019, *Environmentally conscious design (ECD) – Principles, requirements and guidance*

IEC Guide 109, *Environmental aspects – Inclusion in electrotechnical product standards*

ISO 6508-1, *Metallic materials – Rockwell hardness test – Part 1: Test method*

ISO 11469, *Plastics – Generic identification and marking of plastics products*

ISO 21920-1:2021, *Geometrical product specifications (GPS) – Surface texture: Profile – Part 1: Indication of surface texture*

## 3 Terms and definitions

For the purposes of this document, the terms and definitions given in IEC 60050-581, IEC 61076-1, IEC 61076-2 and IEC 60512-1 apply.

ISO and IEC maintain terminology databases for use in standardization at the following addresses:

- IEC Electropedia: available at https://www.electropedia.org/
- ISO Online browsing platform: available at https://www.iso.org/obp

## 4 Technical information

### 4.1 Recommended method of termination

#### 4.1.1 General

According to IEC 60352 series or IEC 60999-1.

#### 4.1.2 Number of contacts and contact cavities

Number of contacts: 12.

Number of contact cavities (for removable contacts): 12.

Suitable wire: cross-sectional area for power contacts: 0,12 mm$^2$ to 0,20 mm$^2$. The core of each wire is deemed to be individually shielded, each shielding requiring a dedicated termination.

### 4.2 Ratings and characteristics

Connectors according this specification are connectors without breaking capacity (COC) according to IEC 61984, therefore they are not intended to be engaged or disengaged in normal use when live or under load.

Rated voltage: 50 V AC/DC.

Rated impulse voltage $U_{\text{imp}}$: 4 kV.

Voltage proof: 2 500 V AC.

Pollution degree: 2.

Rated current (at 85 °C): 2 A. See derating diagram in 6.2.3.

Documents
Document Sharing Hub

Full document details: IEC 61076-2-115-2023

Insulation resistance: 5 000 MΩ.

Climatic category: 55/125/10.

NOTE Whereas the rated impulse voltage $U_{imp}$ corresponding to a rated voltage 50 V AC/DC and overvoltage category III is 0,8 kV (1,5 kV for overvoltage category IV applications) according to IEC 60664-1:2020, Table F.1 (as well as Tables B.1 and B.2), this connector is provided with $U_{imp}$ 4 kV to cover more demanding end-use applications.

### 4.3 Systems of levels

#### 4.3.1 Performance levels

None specified.

#### 4.3.2 Compatibility levels

The compatibility levels of the products specified by this document shall comply with 2.2.3.3 of IEC 61076-1:2006 (level 2 – intermateable).

### 4.4 Classification into climatic categories

Classification into climatic categories is specified in 6.1.

### 4.5 Creepage and clearance distances

Creepage and clearance distances shall be as per 6.2.1 (connector without breaking capacity as defined in IEC 61984).

### 4.6 Current-carrying capacity

Current carrying capacity as specified in 6.2.3.

### 4.7 Marking

The marking of the connector and the package shall be in accordance with 2.7 of IEC 61076-1:2006.

## 5 Dimensional information

### 5.1 General

Dimensions are given in millimetres. Drawings are shown in the first angle projection. The shape of the connectors may deviate from those given in the following drawings as long as the specified dimensions are not influenced.

Missing dimensions shall be chosen according to the common characteristics and intended use.

### 5.2 Isometric view and common features

#### 5.2.1 Isometric view of free connector

An isometric view of the free connector is shown in Figure 1.

Documents
Document Sharing Hub

Full document details: IEC 61076-2-115-2023

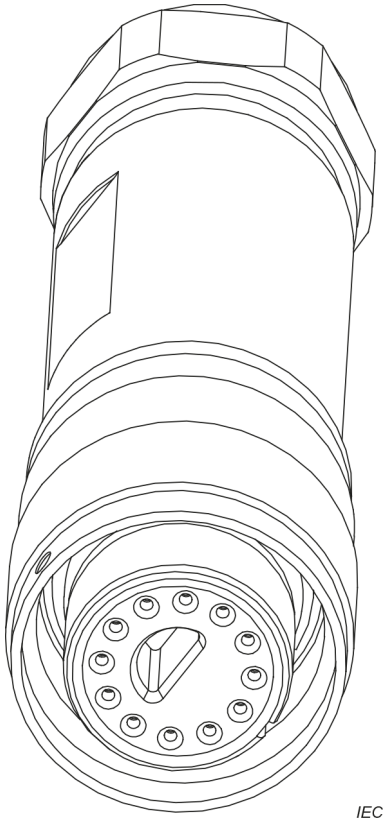


**Figure 1 – Free connector**

### 5.2.2 Isometric view of fixed connector

An isometric view of the fixed connector is shown in Figure 2.

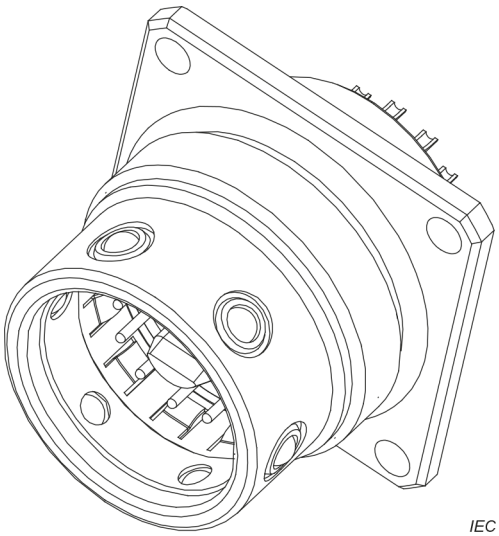


**Figure 2 – Fixed connector**

Documents
Document Sharing Hub

Full document details: IEC 61076-2-115-2023

## 5.3 Free connector

### 5.3.1 Dimensions

The dimensions are shown Figure 3 and listed in Table 1 for the free connector.

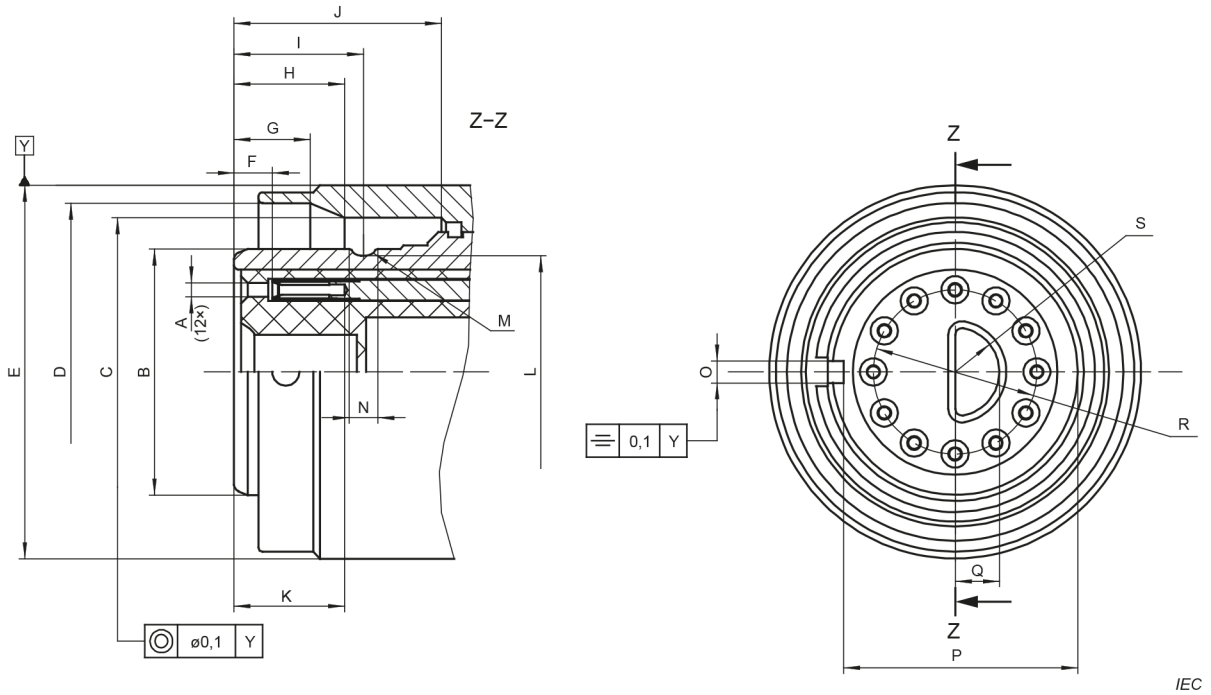


**Figure 3 – Free connector**

**Table 1 – Free connector dimensions**

dimensions in mm

| Letter | Minimum | Nominal | Maximum |
|---|---|---|---|
| A | Φ1 | Φ1 | Φ1,05 |
| B | Φ17,85 | Φ17,90 | Φ17,90 |
| C | Φ22,6 | Φ22,6 | Φ22,71 |
| D | Φ24,75 | Φ24,80 | Φ24,86 |
| E | Φ26,97 | Φ27,3 | Φ27,3 |
| F | 2,7 | 2,8 | 2,9 |
| G | 5,65 | 5,7 | 5,75 |
| H | 8,15 | 8,2 | 8,25 |
| I | 9,45 | 9,5 | 9,55 |
| J | 15,2 | - | - |
| K | 8,1 | - | - |
| L | Φ16,80 | Φ16,85 | Φ16,85 |
| M | R0,75 | R0,8 | R0,85 |
| N | 2,1 | 2,1 | 2,2 |
| O | 1,6 | 1,6 | 1,7 |
| P | 17,1 | 17,2 | 17,2 |
| Q | 3,25 | 3,25 | 3,35 |
| R | Φ11,95 | Φ12 | Φ12,05 |
| S | R3,25 | R3,25 | R3,35 |

AVA Documents
Document Sharing Hub
Full document details: IEC 61076-2-115-2023

### 5.3.2 Terminations

Terminations either according to IEC 60352 series (solderless connections) or according to IEC 60999-1 (screw-type and screwless-type clamping units).

## 5.4 Fixed connector

### 5.4.1 Dimensions

The dimensions are shown in Figure 1 and listed in Table 2 for the fixed connector.

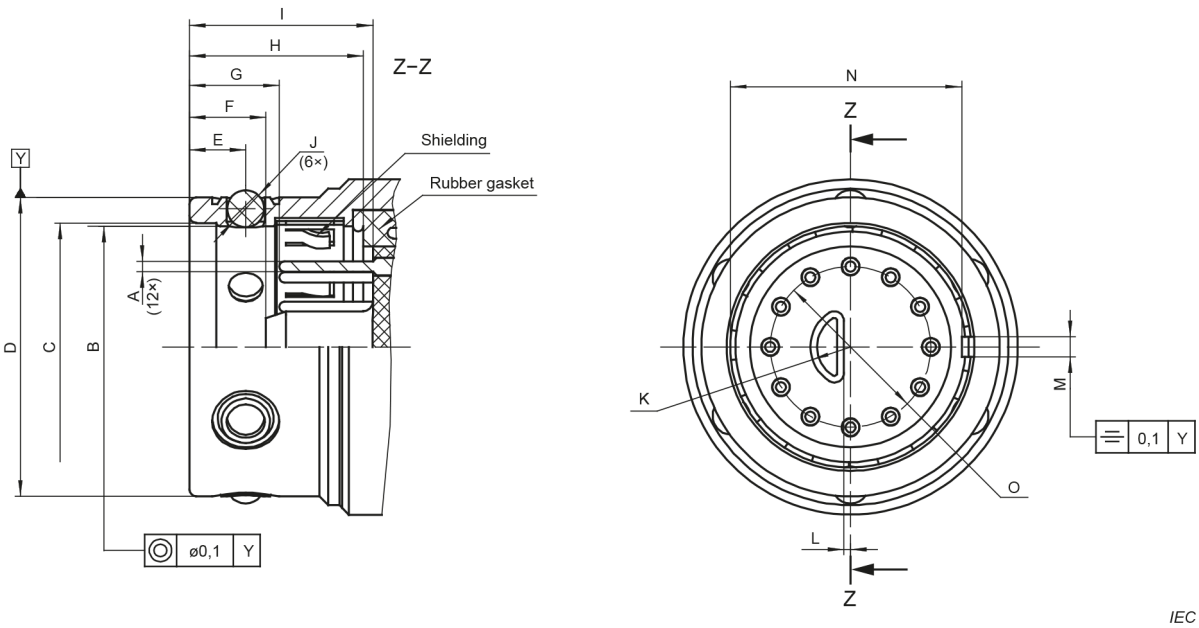


**Figure 4 – Fixed connector**

**Table 2 – Fixed connector dimensions**

dimensions in mm

| Letter | Minimum | Nominal | Maximum |
|---|---|---|---|
| A | Φ0,75 | Φ0,76 | Φ0,77 |
| B | Φ18,05 | Φ18,10 | Φ18,16 |
| C | Φ18,53 | Φ18,55 | Φ18,58 |
| D | Φ22,2 | Φ22,3 | Φ22,3 |
| E | 4,15 | 4,2 | 4,25 |
| F | 5,65 | 5,7 | 5,75 |
| G | 6,65 | 6,7 | 6,75 |
| H | 12,9 | 13 | 13,15 |
| I | 13,7 | - | - |
| J | Φ2,777 | Φ2,778 | Φ2,779 |
| K | R2,9 | R3 | R3 |
| L | 0,45 | 0,5 | 0,55 |
| M | 1,4 | 1,5 | 1,5 |
| N | 17,3 | 17,3 | 17,45 |
| O | Φ11,95 | Φ12 | Φ12,05 |

AVA Documents
Document Sharing Hub
Full document details: IEC 61076-2-115-2023

### 5.4.2 Terminations

Terminations either according to IEC 60352 series (solderless connections) or according to IEC 60999-1 (screw-type and screwless-type clamping units).

## 5.5 Mounting information for connectors

Mounting information could be specified upon agreement between manufacturer and customer.

## 5.6 Gauges – Sizing gauges and retention force gauges

The free connector sizing gage shape and dimensions are shown in Figure 5 and Table 1. Material: tool steel, with hardness of 60 to 64 HRC according to ISO 6508-1 and surface roughness according to ISO 21920-1: $Ra_{max}$ = 0,25 µm, $Ra_{min}$ = 0,15 µm.

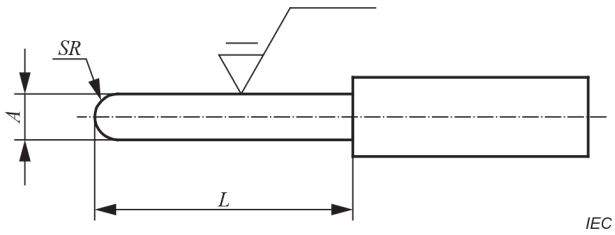


**Figure 5 – Gauge for contact**

**Table 3 – Gauge dimensions**

dimensions in mm

| Gauge | Mass<br>g | Application | *A*<br>mm | *L*<br>mm |
|---|---|---|---|---|
| P11 | - | Sizing | $\Phi 0{,}77\ ^{+0{,}005}_{0}$ | 8 min. |
| P12 | 40 | Retention force | $\Phi 0{,}75\ ^{0}_{-0{,}005}$ | 8 min. |

# 6 Technical characteristics

## 6.1 Classification into climatic categories

Conditions: according to IEC 60068-1 and Table 4.

**Table 4 – Climatic category**

| Climatic category | Lower temperature<br>°C | Upper temperature<br>°C | Temperature<br>°C | Relative humidity<br>% | Steady state damp-heat<br>Days |
|---|---|---|---|---|---|
| 55/125/10 | -55 | +125 | 40 | 93 | 10 |

## 6.2 Electrical characteristics

### 6.2.1 Creepage and clearance distances

For the connector creepage and clearance distances shall be measured only in mated condition.

Creepage distance 2,25 mm min. and clearance distance 2,25 mm min.

Documents
Document Sharing Hub
Full document details: IEC 61076-2-115-2023

### 6.2.2 Voltage proof

Conditions: IEC 60512-4-1, Test 4a, method A.

Standard atmospheric conditions, mated connectors.

Requirements: Test voltage according to Table 5. There shall be no breakdown or flashover.

**Table 5 – Voltage proof**

| NO. | Measuring points | Test voltage<br>V AC RMS | Test time<br>min |
|---|---|---|---|
| 1 | Between contacts, between contacts and metal housing | 2 500 | 1 |

### 6.2.3 Current-carrying capacity

The current-carrying capacity shall be verified according to IEC 60512-5-2, Test 5b, with the maximum accepted cross-sectional area (0,20 mm$^2$), to be in compliance with the rated current (2 A) and the upper limiting temperature (125 °C). See Figure 6.

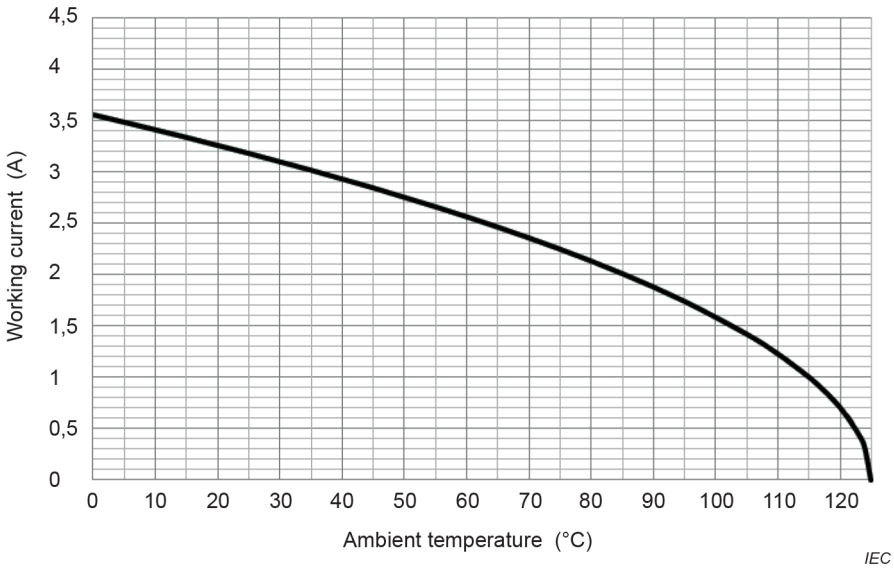


NOTE The diagram is expression of the formula

$I_{(T)} = 3{,}55 \times (1 - T/125)^{0{,}5}$

**Figure 6 – Current-temperature derating (0,20 mm$^2$ wire size)**

### 6.2.4 Electrical load and temperature

Conditions: IEC 60512-9-2, Test 9b.

Standard atmospheric conditions, mated connectors, contacts are connected with IEC 60228 class 5 stranded copper wires, wire cross-sectional area in accordance with 3.2.2 of that standard.

Test current: 2 A, temperature: 85 °C ± 2 °C, duration: 500 h.

Requirements: the appearance, contact resistance (6.2.5), housing electrical continuity (6.2.6), insulation resistance (6.2.7), voltage proof (6.2.2), engaging and separating forces (6.3.4) and IP degree of protection (6.4.4) shall meet the requirements of this specification after test.

AVA Documents
Document Sharing Hub
Full document details: IEC 61076-2-115-2023

#### 6.2.5 Contact resistance

Conditions: IEC 60512-2-1, Test 2a.

Standard atmospheric conditions.

Requirements: Initial: 15 mΩ max.

Final: 30 mΩ max.

#### 6.2.6 Housing electrical continuity

Conditions: IEC 60512-2-6, Test 2f.

Standard atmospheric conditions, mated connectors.

Resistance shall be measured per Test 2b of IEC 60512-2-2.

Requirements: Initial: 5 mΩ max.

Final: 10 mΩ max.

#### 6.2.7 Insulation resistance

Conditions: IEC 60512-3-1, Test 3a, method A.

Standard atmospheric conditions, mated connectors.

Test voltage: 500 V DC ± 50 V DC.

Requirements: Initial: between contacts, contacts and metal housing: 5 000 MΩ min.

Final: between contacts, contacts and metal housing: 100 MΩ min.

### 6.3 Mechanical characteristics

#### 6.3.1 Mechanical operation

Conditions: IEC 60512-9-1, Test 9a.

Standard atmospheric conditions, mated connectors.

Rate of insertion and withdrawal operation: 10 mm/s max.

Operating cycles: 500 cycles.

Requirements: the appearance, contact resistance (6.2.5), housing electrical continuity (6.2.6), insulation resistance (6.2.7), voltage proof (6.2.2), polarization and keying method (6.3.6) and IP degree of protection (6.4.4) shall meet the requirements of this specification after test.

#### 6.3.2 Effectiveness of connector coupling devices

Conditions: IEC 60512-15-6, Test 15f.

Standard atmospheric conditions, mated connectors.

Axial force: 500 N.

Requirements: 1 µs max. of duration of disturbance during the test. The connectors shall remain fully engaged; the appearance of the connectors shall meet the requirements of test phase P1.

Documents
Document Sharing Hub

Full document details: IEC 61076-2-115-2023

#### 6.3.3 Gauge retention force (resilient contact)

Condition: IEC 60512-16-5, Test 16e, method A.

Standard atmospheric conditions.

Requirements: The gauges shall be retained.

#### 6.3.4 Engaging and separating forces

Condition: IEC 60512-13-1, Test 13a.

Standard atmospheric conditions.

Rate of engagement and separation: 10 mm/s max.

Requirements: engaging force: 100 N max.

Separating force: 4,8 N to 80 N.

#### 6.3.5 Contact retention in insert

Conditions: IEC 60512-15-1, Test 15a.

Standard atmospheric conditions, unmated connectors.

Axial force: 20 N.

Requirement: contact displacement shall be less than 0,5 mm when applying axial forces and be less than 0,3 mm after forces are removed. The appearance of connectors shall meet the requirements of this specification after test.

#### 6.3.6 Polarizing and keying method

Conditions: IEC 60512-13-5, Test 13e.

Standard atmospheric conditions, tool and gauges are not required, unintentional engaging forces: 150 N.

Requirements: the appearance of the connectors shall meet the requirements of test phase P1.

### 6.4 Dynamic stress tests

#### 6.4.1 Vibration (sine)

Conditions: IEC 60512-6-4, Test 6d.

Standard atmospheric conditions, mated connectors.

The fixed and free connectors shall be rigidly installed in a suitable fixture.

Vibration severity: 10 Hz to 500 Hz and 0,75 mm or 10 g.

Sweep cycle: 10 cycles on each of the 3 axes.

Requirements: 1 µs max. of duration of disturbance during the test. The appearance, contact resistance (6.2.5), housing electrical continuity (6.2.6), engaging and separating forces (6.3.4) and IP degree of protection (6.4.4) shall meet the requirements of this specification after test.

Documents
Document Sharing Hub

Full document details: IEC 61076-2-115-2023

#### 6.4.2 Shock

Conditions: IEC 60512-6-3, Test 6c.

Standard atmospheric conditions, mated connectors.

Acceleration: 500 m/s$^2$, duration: 11 ms, half-sine wave, 3 shocks in each axes and direction, 3 axes mutually perpendicular to each other.

Requirements: 1 µs max. of duration of disturbance during the test. The appearance, contact resistance (6.2.5), housing electrical continuity (6.2.6), engaging and separating forces (6.3.4) and IP degree of protection (6.4.4) shall meet the requirements of this specification after test.

#### 6.4.3 Free fall (repeated)

Conditions: IEC 60512-7-1, Test 7a.

Total number of revolutions: 25.

Requirement: the appearance of the connectors shall meet the requirements of test phase P1.

#### 6.4.4 IP degree of protection

Conditions: according to IEC 60529 mated connectors: IP65/IP67. Specimens previously subject to the tests foreseen in 6.2.4 (electrical load and temperature), 6.3.1 (mechanical operation), 6.4.1 (vibration) and 6.4.2 (shock) according to the relevant test groups (B, D, and A) may be conveniently subject to these IP code tests all together, regardless their belonging to different test groups.

Requirement: IPX5 according to 14.2.5 of IEC 60529:1989; IPX7 according to 14.2.7 of IEC 60529:1989; IP6X according to Table 7 of IEC 60529:1989.

#### 6.4.5 Glow-wire flammability test method for end-products (GWEPT)

Conditions: IEC 60512-20-3, Test 20c.

Temperature: 850 °C ± 15 °C.

Requirement: according to Clause 10 of IEC 60695-2-11:2021.

### 6.5 Climatic tests

#### 6.5.1 Rapid change of temperature

Conditions: IEC 60512-11-4, Test 11d.

Temperature: -55 °C to 125 °C, mated connectors.

Requirements: the appearance, insulation resistance (6.2.7), contact resistance (6.2.5), housing electric continuity (6.2.6), voltage proof (6.2.2) shall meet the requirements of this specification after test.

#### 6.5.2 Dry heat

Conditions: IEC 60512-11-9, Test 11i.

Temperature: 125 °C±2 °C, duration: 96 h, mated connectors.

Requirements: the appearance, contact resistance (6.2.5), engaging and separating forces(6.3.4), contact retention in insert(6.3.3), voltage proof (6.2.2) and IP degree of protection 6.4.4) shall meet the requirements of this specification after test.

Documents
Document Sharing Hub
Full document details: IEC 61076-2-115-2023