IEC 61076-3-110

Edition 2.0 2012-05

INTERNATIONAL STANDARD

NORME INTERNATIONALE

Withdrawn

Connectors for electronic equipment – Product requirements – Part 3-110: Detail specification for shielded, free and fixed connectors for data transmission with frequencies up to 1 000 MHz

Connecteurs pour équipements électroniques – Exigences de produit – Partie 3-110: Spécification particulière pour les fiches et les embases blindées pour la transmission de données à des fréquences jusqu'à 1 000 MHz

IEC 61076-3-110:2012

Documents
Document Sharing Hub

Full document details: IEC 61076-3-110 2012

THIS PUBLICATION IS COPYRIGHT PROTECTED

Copyright © 2012 IEC, Geneva, Switzerland

All rights reserved. Unless otherwise specified, no part of this publication may be reproduced or utilized in any form or by any means, electronic or mechanical, including photocopying and microfilm, without permission in writing from either IEC or IEC's member National Committee in the country of the requester.
If you have any questions about IEC copyright or have an enquiry about obtaining additional rights to this publication, please contact the address below or your local IEC member National Committee for further information.

Droits de reproduction réservés. Sauf indication contraire, aucune partie de cette publication ne peut être reproduite ni utilisée sous quelque forme que ce soit et par aucun procédé, électronique ou mécanique, y compris la photocopie et les microfilms, sans l'accord écrit de la CEI ou du Comité national de la CEI du pays du demandeur.
Si vous avez des questions sur le copyright de la CEI ou si vous désirez obtenir des droits supplémentaires sur cette publication, utilisez les coordonnées ci-après ou contactez le Comité national de la CEI de votre pays de résidence.

IEC Central Office
3, rue de Varembé
CH-1211 Geneva 20
Switzerland

Tel.: +41 22 919 02 11
Fax: +41 22 919 03 00
info@iec.ch
www.iec.ch

About the IEC

The International Electrotechnical Commission (IEC) is the leading global organization that prepares and publishes International Standards for all electrical, electronic and related technologies.

About IEC publications

The technical content of IEC publications is kept under constant review by the IEC. Please make sure that you have the latest edition, a corrigenda or an amendment might have been published.

Useful links:

IEC publications search - www.iec.ch/searchpub

The advanced search enables you to find IEC publications by a variety of criteria (reference number, text, technical committee,…).
It also gives information on projects, replaced and withdrawn publications.

IEC Just Published - webstore.iec.ch/justpublished

Stay up to date on all new IEC publications. Just Published details all new publications released. Available on-line and also once a month by email.

Electropedia - www.electropedia.org

The world's leading online dictionary of electronic and electrical terms containing more than 30 000 terms and definitions in English and French, with equivalent terms in additional languages. Also known as the International Electrotechnical Vocabulary (IEV) on-line.

Customer Service Centre - webstore.iec.ch/csc

If you wish to give us your feedback on this publication or need further assistance, please contact the Customer Service Centre: csc@iec.ch.

A propos de la CEI

La Commission Electrotechnique Internationale (CEI) est la première organisation mondiale qui élabore et publie des Normes internationales pour tout ce qui a trait à l'électricité, à l'électronique et aux technologies apparentées.

A propos des publications CEI

Le contenu technique des publications de la CEI est constamment revu. Veuillez vous assurer que vous possédez l'édition la plus récente, un corrigendum ou amendement peut avoir été publié.

Liens utiles:

Recherche de publications CEI - www.iec.ch/searchpub

La recherche avancée vous permet de trouver des publications CEI en utilisant différents critères (numéro de référence, texte, comité d'études,…).
Elle donne aussi des informations sur les projets et les publications remplacées ou retirées.

Just Published CEI - webstore.iec.ch/justpublished

Restez informé sur les nouvelles publications de la CEI. Just Published détaille les nouvelles publications parues. Disponible en ligne et aussi une fois par mois par email.

Electropedia - www.electropedia.org

Le premier dictionnaire en ligne au monde de termes électroniques et électriques. Il contient plus de 30 000 termes et définitions en anglais et en français, ainsi que les termes équivalents dans les langues additionnelles. Egalement appelé Vocabulaire Electrotechnique International (VEI) en ligne.

Service Clients - webstore.iec.ch/csc

Si vous désirez nous donner des commentaires sur cette publication ou si vous avez des questions contactez-nous: csc@iec.ch.

Withdrawn

Documents
Document Sharing Hub

Full document details: IEC 61076-3-110 2012

IEC 61076-3-110

Edition 2.0 2012-05

INTERNATIONAL STANDARD

NORME INTERNATIONALE

Withdrawn

Connectors for electronic equipment – Product requirements – Part 3-110: Detail specification for shielded, free and fixed connectors for data transmission with frequencies up to 1 000 MHz

Connecteurs pour équipements électroniques – Exigences de produit – Partie 3-110: Spécification particulière pour les fiches et les embases blindées pour la transmission de données à des fréquences jusqu'à 1 000 MHz

INTERNATIONAL
ELECTROTECHNICAL
COMMISSION

COMMISSION
ELECTROTECHNIQUE
INTERNATIONALE

PRICE CODE
CODE PRIX

R

ICS 31.220.10

ISBN 978-2-88912-056-7

Warning! Make sure that you obtained this publication from an authorized distributor.
Attention! Veuillez vous assurer que vous avez obtenu cette publication via un distributeur agréé.

AVA Documents
Document Sharing Hub

® Registered trademark of the International Electrotechnical Commission
Marque déposée de la Commission Electrotechnique Internationale

Full document details: IEC 61076-3-110 2012

CONTENTS

FOREWORD 4
INTRODUCTION 6
1 Scope 7
2 Normative references 7
3 Technical information 8
3.1 Terms and definitions 8
3.2 Interchangeability level 8
3.3 Intermateability 8
3.4 Interoperability 8
3.5 Backward compatibility 9
3.6 Complete connectors (pairs) 9
3.7 Fixed connectors 9
3.8 Free connectors 9
3.9 Classification into climate categories 9
3.10 Clearance and creepage distances 9
3.11 Current carrying capacity 9
3.12 Marking 9
4 Dimensional information 9
4.1 General 9
4.2 Isometric view and common features 10
4.3 Mating information 10
4.4 Fixed connectors 10
4.4.1 Fixed connectors common dimensions 10
4.4.2 Fixed connector styles 10
4.5 Free connectors 11
4.6 Terminations 11
4.7 Mounting information 11
4.7.1 Mounting information for fixed connectors 11
4.7.2 Mounting information for free connectors 11
4.8 Gauges 12
4.8.1 General 12
4.8.2 Mechanical function, engaging/separating/insertion/withdrawal force gauges 12
4.8.3 Probes 12
4.8.4 Contact resistance gauge 12
4.8.5 Test panel (for voltage proof test) 12
4.8.6 Test panel (for EMC/crosstalk, etc.) 12
5 Characteristics 12
5.1 General 12
5.2 Pin and pair grouping assignment 12
5.3 Climatic category 13
5.4 Electrical characteristics 13
5.5 Transmission characteristics 13
5.5.1 General 13
5.5.2 Insertion loss 13
5.5.3 Return Loss 14

Withdrawn

AVA Documents
Document Sharing Hub

Full document details: IEC 61076-3-110 2012

5.5.4 Propagation delay 14
5.5.5 Delay skew 14
5.5.6 Near-end crosstalk (NEXT) 14
5.5.7 Power sum NEXT (for information only) 14
5.5.8 Far-end crosstalk (FEXT) 14
5.5.9 Power sum FEXT (for information only) 15
5.5.10 Transverse conversion loss 15
5.5.11 Transverse conversion transfer loss 15
5.5.12 Power sum alien (exogenous) NEXT 15
5.5.13 Power sum alien (exogenous) FEXT 15
5.5.14 Coupling attenuation 16
5.5.15 Transfer impedance 16
5.6 Mechanical characteristics 16
6 Test schedule 16
6.1 General 16
6.2 Test schedule 17
6.2.1 Test group EP 17
Annex A (normative) Gauging requirements 18
Bibliography 19

Figure 1 – Isometric view, fixed 8 and 12 pole and free 8, 12 and 4 pole connectors 10
Figure 2 – Fixed connector, board mounted, example 11
Figure 3 – Fixed connector pin and pair grouping assignment (front view of connector) 13

Table 1 – Climatic categories – selected values 13
Table 2 – Test group EP 17

Withdrawn

Documents
Document Sharing Hub

Full document details: IEC 61076-3-110 2012

INTERNATIONAL ELECTROTECHNICAL COMMISSION

CONNECTORS FOR ELECTRONIC EQUIPMENT – PRODUCT REQUIREMENTS –

Part 3-110: Detail specification for shielded, free and fixed connectors for data transmission with frequencies up to 1 000 MHz

FOREWORD

1) The International Electrotechnical Commission (IEC) is a worldwide organization for standardization comprising all national electrotechnical committees (IEC National Committees). The object of IEC is to promote international co-operation on all questions concerning standardization in the electrical and electronic fields. To this end and in addition to other activities, IEC publishes International Standards, Technical Specifications, Technical Reports, Publicly Available Specifications (PAS) and Guides (hereafter referred to as "IEC Publication(s)"). Their preparation is entrusted to technical committees; any IEC National Committee interested in the subject dealt with may participate in this preparatory work. International, governmental and non-governmental organizations liaising with the IEC also participate in this preparation. IEC collaborates closely with the International Organization for Standardization (ISO) in accordance with conditions determined by agreement between the two organizations.
2) The formal decisions or agreements of IEC on technical matters express, as nearly as possible, an international consensus of opinion on the relevant subjects since each technical committee has representation from all interested IEC National Committees.
3) IEC Publications have the form of recommendations for international use and are accepted by IEC National Committees in that sense. While all reasonable efforts are made to ensure that the technical content of IEC Publications is accurate, IEC cannot be held responsible for the way in which they are used or for any misinterpretation by any end user.
4) In order to promote international uniformity, IEC National Committees undertake to apply IEC Publications transparently to the maximum extent possible in their national and regional publications. Any divergence between any IEC Publication and the corresponding national or regional publication shall be clearly indicated in the latter.
5) IEC itself does not provide any attestation of conformity. Independent certification bodies provide conformity assessment services and, in some areas, access to IEC marks of conformity. IEC is not responsible for any services carried out by independent certification bodies.
6) All users should ensure that they have the latest edition of this publication.
7) No liability shall attach to IEC or its directors, employees, servants or agents including individual experts and members of its technical committees and IEC National Committees for any personal injury, property damage or other damage of any nature whatsoever, whether direct or indirect, or for costs (including legal fees) and expenses arising out of the publication, use of, or reliance upon, this IEC Publication or any other IEC Publications.
8) Attention is drawn to the Normative references cited in this publication. Use of the referenced publications is indispensable for the correct application of this publication.
9) Attention is drawn to the possibility that some of the elements of this IEC Publication may be the subject of patent rights. IEC shall not be held responsible for identifying any or all such patent rights.

International Standard IEC 61076-3-110 has been prepared by subcommittee 48B: Connectors, of IEC technical committee 48: Electromechanical components and mechanical structures for electronic equipment.

This second edition cancels and replaces the first edition, issued in 2007, and constitutes a technical revision.

This edition includes the following significant technical changes with respect to the previous edition:

– changes in 4.5 regarding electrical transmission performance i.e. return loss, among other specific changes, in compliance to the requirements of ISO/IEC 11801,
– updated text and format to be consistent with the referenced standards,
– removal of duplication of requirements in the IEC 60603-7 standard series,

Withdrawn
Documents
Document Sharing Hub
Full document details: IEC 61076-3-110 2012

– introduction of transmission performance testing procedures as specified by IEC 60512-28-100.

The text of this standard is based on the following documents:

FDIS	Report on voting
48B/2285/FDIS	48B/2295/RVD

Full information on the voting for the approval of this standard can be found in the report on voting indicated in the above table.

A list of all parts of IEC 61076 series, under the general title *Connectors for electronic equipment – Product requirements*, can be found on the IEC website.

This publication has been drafted in accordance with the ISO/IEC Directives, Part 2.

The committee has decided that the contents of this publication will remain unchanged until the stability date indicated on the IEC web site under "http://webstore.iec.ch" in the data related to the specific publication. At this date, the publication will be

- reconfirmed,
- withdrawn,
- replaced by a revised edition, or
- amended.

withdrawn

Documents
Document Sharing Hub

Full document details: IEC 61076-3-110 2012

INTRODUCTION

This detail specification describes connectors according to the IEC 61076-3 series connector requirements.

This detail specification describes connectors that are similar to and compatible with IEC 60603-7 series connectors.

The IEC 61076-3-110 free connector can be used in data communication cabling systems with the IEC 60603-7-7 and IEC 60603-7-71 fixed connector.

The IEC 61076-3-110 connector includes up to 12 contacts, including up to 8 contacts (1,2,3,4,5,6,7,8) that are similar to a standard IEC 60603-7 series connector. In addition, the IEC 61076-3-110 connector includes up to 4 additional contacts (6',3',4',5') located on the opposite side from the original contacts' positions of a basic IEC 60603-7 series connector.

For use in high speed communications cabling systems, IEC 60603-7-7 and IEC 60603-7-71 fixed connectors include a switch or other means to engage these two different sets of four contacts to enable backward compatibility for transmission performance. In this application the IEC 61076-3-110 free connector simply uses 8 contacts (1,2,3',4',5',6',7,8) and no switch.

The IEC 61076-3-110 fixed connector includes a board mounted style in addition to the cable mounted style.

The complete requirements for the connectors described herein correspond to this detail specification and the current issues of IEC 61076-3 and IEC 60603-7 series, which are referenced herein accordingly.

Withdrawn

AVA Documents
Document Sharing Hub

Full document details: IEC 61076-3-110 2012

CONNECTORS FOR ELECTRONIC EQUIPMENT – PRODUCT REQUIREMENTS –

Part 3-110: Detail specification for shielded, free and fixed connectors for data transmission with frequencies up to 1 000 MHz

Withdrawn

1 Scope

This part of IEC 61076 is a detail specification for two-part connectors.

This detail specification covers mechanical and environmental requirements, and electrical transmission requirements for frequencies up to 1 000 MHz.

These connectors can be used as category 7_A connectors in class F_A cabling systems specified in ISO/IEC 11801.[1]

The connectors are intermateable with IEC 60603-7 series connectors (see 3.3).

The connectors are interoperable with IEC 60603-7-7 and IEC 60603-7-71 connectors (see 3.4).

The connectors are backward compatible with IEC 60603-7-7 and IEC 60603-7-71 connectors (see 3.5).

2 Normative references

The following documents, in whole or in part, are normatively referenced in this document and are indispensable for its application. For dated references, only the edition cited applies. For undated references, the latest edition of the referenced document (including any amendments) applies.

IEC 60068-1, *Environmental testing – Part 1: General and guidance*

IEC 60512 (all parts), *Connectors for electronic equipment – Tests and measurements*

IEC 60512-23-3: 2000, *Electromechanical components for electronic equipment – Basic testing procedures and measuring methods – Part 23-3: Test 23c: Shielding effectiveness of connectors and accessories*

IEC 60512-25-9: 2008, *Connectors for electronic equipment – Tests and measurements – Part 25-9: Signal integrity tests – Test 25i: Alien crosstalk*

IEC 60512-28-100: *Connectors for electronic equipment – Tests and measurements – Part 28-100: Signal integrity tests up to 1 000 MHz on IEC 60603-7 and IEC 61076-3 series connectors – Tests 28a to 28g (to be published)*

IEC 60603-7:2008, *Connectors for electronic equipment – Part 7: Detail specification for 8-way, unshielded, free and fixed connectors*

---

[1] ISO/IEC 11801 contains various 'category' designations corresponding to various frequency ranges.

AVA Documents
Document Sharing Hub

Full document details: IEC 61076-3-110 2012

IEC 60603-7-1:2011, *Connectors for electronic equipment – Part 7-1: Detail specification for 8-way, shielded, free and fixed connectors*

IEC 60603-7-7:2010, *Connectors for electronic equipment – Part 7-7: Detail specification for 8-way, shielded, free and fixed connectors for data transmission with frequencies up to 600 MHz*

IEC 60603-7-71:2010, *Connectors for electronic equipment – Part 7-7: Detail specification for 8-way, shielded, free and fixed connectors for data transmission with frequencies up to 1000 MHz*

IEC 61076-1:2006, *Connectors for electronic equipment – Product requirements – Part 1: Generic specification*

IEC 62153-4-12, *Metallic communication cable test methods – Part 4-12: Electromagnetic compatibility (EMC) - Coupling attenuation or screening attenuation of connecting hardware – Absorbing clamp method*

EN 50289-1-14, *Communication cables – Specifications for test methods – Electrical test methods – Coupling attenuation or screening attenuation of connecting hardware*

3 Technical information

3.1 Terms and definitions

For the purposes of this document, the terminology used in and applicable to this specification is stated in 2.1 of IEC 61076-1:2006. IEC 60512-1 also contains applicable terms.

3.2 Interchangeability level

These connectors are intermateable, interoperable and backward compatible with IEC 61076-3-110 and IEC 60603-7 series connectors.

The interchangeability of mated connectors according to IEC 61076-3-110 insofar as intermateability, interoperability and backward compatibility are ensured by the requirements herein for mated connectors when the free connector and fixed connector are from different manufacturers.

3.3 Intermateability

Intermateability is ensured by applying the “GO” and “NO-GO” gauge requirements herein, and adherence to dimensional requirements herein.

3.4 Interoperability

Interoperability of different IEC 61076-3-110 connectors is ensured by compliance with all transmission requirements when the connector is mated with a free connector as described in IEC 60512-28-100.

These connectors are interoperable with IEC 60603-7-7 and IEC 60603-7-71 series connectors.

NOTE (transmission performance categories) In this IEC standard, the term “category”, when used in reference to transmission performance, refers to those categories defined by ISO/IEC 11801.

Withdrawn

AVA Documents Document Sharing Hub

Full document details: IEC 61076-3-110 2012

3.5 Backward compatibility

The backward compatibility requirement ensures that a free connector or fixed connector, which is in compliance with this detail specification, mated with a fixed connector or free connector in compliance with IEC 60603-7-7 or IEC 60603-7-71 connectors, shall fully comply with the respective requirements of IEC 60603-7-7 or IEC 60603-7-71 connectors.

3.6 Complete connectors (pairs)

Complete connectors engage a total of up to 12 contacts.

These connectors are interoperable with IEC 60603-7 series connectors.

The IEC 61076-3-110 connector includes up to 12 contacts including up to 8 contacts (1,2,3,4,5,6,7,8) that are similar to a standard IEC 60603-7 series connector. In addition, the IEC 61076-3-110 connector includes up to 4 additional contacts (6',3',4',5') located on the opposite side from the original contacts' positions of a basic IEC 60603-7 series connectors.

3.7 Fixed connectors

IEC 61076-3-110 fixed connectors may include a rear cavity and side channels.

These features accommodate the switch actuator protrusions on IEC 60603-7-7 and IEC 60603-7-71 free connectors.

3.8 Free connectors

IEC 61076-3-110 free connectors may include front and side protrusions.

The free connector front switch actuator protrusion may be provided for operating the IEC 60603-7-7 or IEC 60603-7-71 fixed connector switch actuator, if present.

The free connector side protrusions may be provided for precluding mating with lower frequency IEC 60603-7 series fixed connectors.

3.9 Classification into climate categories

Classification into climatic categories is specified in 5.3.

3.10 Clearance and creepage distances

Clearance and creepage distances are specified in 5.4.

3.11 Current carrying capacity

Current carrying capacity is specified in 5.4.

3.12 Marking

The marking of the connector and the package shall be in accordance with 2.7 of IEC 61076-1:2006.

4 Dimensional information

4.1 General

The shape of the connectors may deviate from those given in the following drawings as long as the specified dimensions are not influenced.

Withdrawn

AVA Documents Document Sharing Hub

Full document details: IEC 61076-3-110 2012

Dimensions are given in millimetres.

Drawings are shown in first angle projection unless specifically stated otherwise in the Figure.

4.2 Isometric view and common features

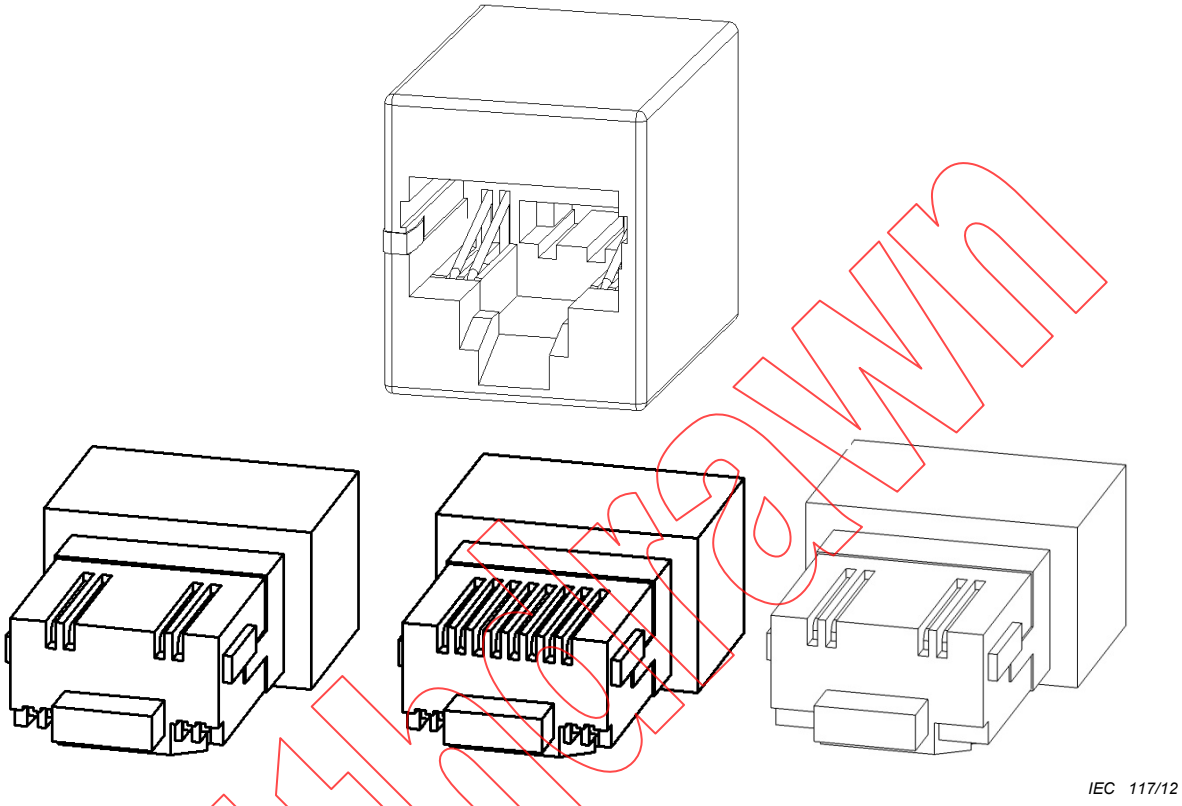

Figure 1 – Isometric view, fixed 8 and 12 pole and free 8, 12 and 4 pole connectors

These connectors have common features insofar as the contacts arrangement, mating information, and the coupling device.

These connectors have the same common features as IEC 60603-7 series connectors.

Mating alignment is controlled by a vertical and horizontal reference plane and by the centring of the coupling device (latch).

4.3 Mating information

See 3.2 of IEC 60603-7-1 and 3.4 of IEC 60603-7-7 for dimensions, views and requirements.

4.4 Fixed connectors

4.4.1 Fixed connectors common dimensions

See 3.2.2 of IEC 60603-7-1 and 3.5 IEC 60603-7-7 for dimensions, views and requirements.

4.4.2 Fixed connector styles

4.4.2.1 Style A, fixed connector, cable mounted

Outside dimensions for cable mounted fixed connectors are not specified

Documents
Document Sharing Hub

Full document details: IEC 61076-3-110 2012

4.4.2.2 Style B, fixed connector, board mounted

An example of a printed circuit board mounted connector is shown by Figure 2.

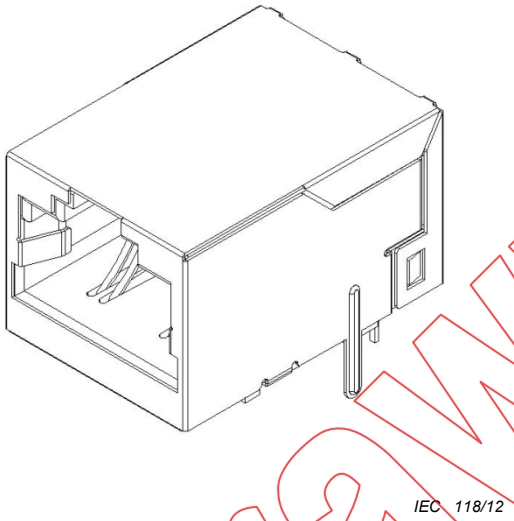

Figure 2 – Fixed connector, board mounted, example

4.5 Free connectors

See 3.2.3 of IEC 60603-7-1 and 3.6 IEC 60603-7-7 for dimensions, views and requirements.

4.6 Terminations

See 4.2 of IEC 60603-7.

4.7 Mounting information

4.7.1 Mounting information for fixed connectors

4.7.1.1 General

Fixed connector mounting information is not specified and is to be determined by the manufacturer.

4.7.1.2 Hole pattern on printed boards

Fixed connector printed boards hole pattern on is not specified and is to be determined by the manufacturer.

4.7.1.3 Mounting on panels

Fixed connector mounting on panels is not specified and is to be determined by the manufacturer.

4.7.2 Mounting information for free connectors

Free connectors mounting information, for mounting onto cables, is not specified and is to be determined by the manufacturer.

Withdrawn

AVA Documents
Document Sharing Hub

Full document details: IEC 61076-3-110 2012