IEC 61076-3-110

Edition 3.0 2016-08

INTERNATIONAL STANDARD

NORME INTERNATIONALE

Connectors for electronic equipment – Product requirements – Part 3-110: Detail specification for free and fixed connectors for data transmission with frequencies up to 3 000 MHz

Connecteurs pour équipements électroniques – Exigences de produit – Partie 3-110: Spécification particulière pour les fiches et les embases pour la transmission de données à des fréquences jusqu'à 3 000 MHz

IEC 61076-3-110:2016-08(en-fr)

Documents
Document Sharing Hub
Full document details: IEC 61076-3-110 2016

THIS PUBLICATION IS COPYRIGHT PROTECTED
Copyright © 2016 IEC, Geneva, Switzerland

All rights reserved. Unless otherwise specified, no part of this publication may be reproduced or utilized in any form or by any means, electronic or mechanical, including photocopying and microfilm, without permission in writing from either IEC or IEC's member National Committee in the country of the requester. If you have any questions about IEC copyright or have an enquiry about obtaining additional rights to this publication, please contact the address below or your local IEC member National Committee for further information.

Droits de reproduction réservés. Sauf indication contraire, aucune partie de cette publication ne peut être reproduite ni utilisée sous quelque forme que ce soit et par aucun procédé, électronique ou mécanique, y compris la photocopie et les microfilms, sans l'accord écrit de l'IEC ou du Comité national de l'IEC du pays du demandeur. Si vous avez des questions sur le copyright de l'IEC ou si vous désirez obtenir des droits supplémentaires sur cette publication, utilisez les coordonnées ci-après ou contactez le Comité national de l'IEC de votre pays de résidence.

IEC Central Office
3, rue de Varembé
CH-1211 Geneva 20
Switzerland

Tel.: +41 22 919 02 11
Fax: +41 22 919 03 00
info@iec.ch
www.iec.ch

About the IEC
The International Electrotechnical Commission (IEC) is the leading global organization that prepares and publishes International Standards for all electrical, electronic and related technologies.

About IEC publications
The technical content of IEC publications is kept under constant review by the IEC. Please make sure that you have the latest edition, a corrigenda or an amendment might have been published.

IEC Catalogue - webstore.iec.ch/catalogue
The stand-alone application for consulting the entire bibliographical information on IEC International Standards, Technical Specifications, Technical Reports and other documents. Available for PC, Mac OS, Android Tablets and iPad.

IEC publications search - www.iec.ch/searchpub
The advanced search enables to find IEC publications by a variety of criteria (reference number, text, technical committee,…). It also gives information on projects, replaced and withdrawn publications.

IEC Just Published - webstore.iec.ch/justpublished
Stay up to date on all new IEC publications. Just Published details all new publications released. Available online and also once a month by email.

Electropedia - www.electropedia.org
The world's leading online dictionary of electronic and electrical terms containing 20 000 terms and definitions in English and French, with equivalent terms in 15 additional languages. Also known as the International Electrotechnical Vocabulary (IEV) online.

IEC Glossary - std.iec.ch/glossary
65 000 electrotechnical terminology entries in English and French extracted from the Terms and Definitions clause of IEC publications issued since 2002. Some entries have been collected from earlier publications of IEC TC 37, 77, 86 and CISPR.

IEC Customer Service Centre - webstore.iec.ch/csc
If you wish to give us your feedback on this publication or need further assistance, please contact the Customer Service Centre: csc@iec.ch.

A propos de l'IEC
La Commission Electrotechnique Internationale (IEC) est la première organisation mondiale qui élabore et publie des Normes internationales pour tout ce qui a trait à l'électricité, à l'électronique et aux technologies apparentées.

A propos des publications IEC
Le contenu technique des publications IEC est constamment revu. Veuillez vous assurer que vous possédez l'édition la plus récente, un corrigendum ou amendement peut avoir été publié.

Catalogue IEC - webstore.iec.ch/catalogue
Application autonome pour consulter tous les renseignements bibliographiques sur les Normes internationales, Spécifications techniques, Rapports techniques et autres documents de l'IEC. Disponible pour PC, Mac OS, tablettes Android et iPad.

Recherche de publications IEC - www.iec.ch/searchpub
La recherche avancée permet de trouver des publications IEC en utilisant différents critères (numéro de référence, texte, comité d'études,…). Elle donne aussi des informations sur les projets et les publications remplacées ou retirées.

IEC Just Published - webstore.iec.ch/justpublished
Restez informé sur les nouvelles publications IEC. Just Published détaille les nouvelles publications parues. Disponible en ligne et aussi une fois par mois par email.

Electropedia - www.electropedia.org
Le premier dictionnaire en ligne de termes électroniques et électriques. Il contient 20 000 termes et définitions en anglais et en français, ainsi que les termes équivalents dans 15 langues additionnelles. Egalement appelé Vocabulaire Electrotechnique International (IEV) en ligne.

Glossaire IEC - std.iec.ch/glossary
65 000 entrées terminologiques électrotechniques, en anglais et en français, extraites des articles Termes et Définitions des publications IEC parues depuis 2002. Plus certaines entrées antérieures extraites des publications des CE 37, 77, 86 et CISPR de l'IEC.

Service Clients - webstore.iec.ch/csc
Si vous désirez nous donner des commentaires sur cette publication ou si vous avez des questions contactez-nous: csc@iec.ch.

Documents
Document Sharing Hub

Full document details: IEC 61076-3-110 2016

IEC 61076-3-110

Edition 3.0 2016-08

INTERNATIONAL STANDARD

NORME INTERNATIONALE

Connectors for electronic equipment – Product requirements – Part 3-110: Detail specification for free and fixed connectors for data transmission with frequencies up to 3 000 MHz

Connecteurs pour équipements électroniques – Exigences de produit – Partie 3-110: Spécification particulière pour les fiches et les embases pour la transmission de données à des fréquences jusqu'à 3 000 MHz

INTERNATIONAL
ELECTROTECHNICAL
COMMISSION

COMMISSION
ELECTROTECHNIQUE
INTERNATIONALE

ICS 31.220.10

ISBN 978-2-8322-3557-7

Warning! Make sure that you obtained this publication from an authorized distributor.
Attention! Veuillez vous assurer que vous avez obtenu cette publication via un distributeur agréé.

® Registered trademark of the International Electrotechnical Commission
Marque déposée de la Commission Electrotechnique Internationale

Documents
Document Sharing Hub

Full document details: IEC 61076-3-110 2016

CONTENTS

FOREWORD....4
INTRODUCTION....6
1 Scope....7
2 Normative references....7
3 Terms and definitions....8
4 Common features and isometric view....9
4.1 General....9
4.2 Cable terminations and internal connections – Fixed and free connectors....10
4.3 Mating information....10
4.4 Mounting information....10
5 Gauges....11
6 Characteristics....11
6.1 General....11
6.2 Classification into climate categories, clearance and creepage distances and current carrying capacity....11
6.3 Electrical characteristics....11
6.4 Transmission characteristics....11
6.4.1 General....11
6.4.2 Insertion loss (IL)....11
6.4.3 Return loss (RL)....11
6.4.4 Propagation delay....12
6.4.5 Delay skew....12
6.4.6 Near-end crosstalk (NEXT)....12
6.4.7 Power sum NEXT (PSNEXT) (for information only)....12
6.4.8 Far-end crosstalk (FEXT)....12
6.4.9 Power sum FEXT (PSFEXT) (for information only)....12
6.4.10 Transverse conversion loss (TCL)....12
6.4.11 Transverse conversion transfer loss (TCTL)....12
6.4.12 Power sum alien (exogenous) NEXT (PSANEXT)....13
6.4.13 Power sum alien (exogenous) FEXT (PSAFEXT)....13
6.4.14 Coupling attenuation....13
6.5 Mechanical characteristics....13
7 Test schedule....13
7.1 General....13
7.2 Test schedule....14
7.2.1 Test group EP....14
Annex A (normative) Gauging requirements....15
A.1 Fixed connectors....15
A.2 Free connectors....15
Bibliography....16

Figure 1 – Isometric view of fixed cable connector and free 4, 6 and 2 pair connectors, examples....9
Figure 2 – Isometric view of fixed board connector, example....10

AVA Documents
Document Sharing Hub
Full document details: IEC 61076-3-110 2016

Figure 3 – Fixed connector pin numbering assignments (front view of connector), example 10

Table 1 – Test group EP 14

Documents
Document Sharing Hub

Full document details: IEC 61076-3-110 2016

INTERNATIONAL ELECTROTECHNICAL COMMISSION

CONNECTORS FOR ELECTRONIC EQUIPMENT – PRODUCT REQUIREMENTS –

Part 3-110: Detail specification for free and fixed connectors for data transmission with frequencies up to 3 000 MHz

FOREWORD

1) The International Electrotechnical Commission (IEC) is a worldwide organization for standardization comprising all national electrotechnical committees (IEC National Committees). The object of IEC is to promote international co-operation on all questions concerning standardization in the electrical and electronic fields. To this end and in addition to other activities, IEC publishes International Standards, Technical Specifications, Technical Reports, Publicly Available Specifications (PAS) and Guides (hereafter referred to as "IEC Publication(s)"). Their preparation is entrusted to technical committees; any IEC National Committee interested in the subject dealt with may participate in this preparatory work. International, governmental and non-governmental organizations liaising with the IEC also participate in this preparation. IEC collaborates closely with the International Organization for Standardization (ISO) in accordance with conditions determined by agreement between the two organizations.
2) The formal decisions or agreements of IEC on technical matters express, as nearly as possible, an international consensus of opinion on the relevant subjects since each technical committee has representation from all interested IEC National Committees.
3) IEC Publications have the form of recommendations for international use and are accepted by IEC National Committees in that sense. While all reasonable efforts are made to ensure that the technical content of IEC Publications is accurate, IEC cannot be held responsible for the way in which they are used or for any misinterpretation by any end user.
4) In order to promote international uniformity, IEC National Committees undertake to apply IEC Publications transparently to the maximum extent possible in their national and regional publications. Any divergence between any IEC Publication and the corresponding national or regional publication shall be clearly indicated in the latter.
5) IEC itself does not provide any attestation of conformity. Independent certification bodies provide conformity assessment services and, in some areas, access to IEC marks of conformity. IEC is not responsible for any services carried out by independent certification bodies.
6) All users should ensure that they have the latest edition of this publication.
7) No liability shall attach to IEC or its directors, employees, servants or agents including individual experts and members of its technical committees and IEC National Committees for any personal injury, property damage or other damage of any nature whatsoever, whether direct or indirect, or for costs (including legal fees) and expenses arising out of the publication, use of, or reliance upon, this IEC Publication or any other IEC Publications.
8) Attention is drawn to the Normative references cited in this publication. Use of the referenced publications is indispensable for the correct application of this publication.
9) Attention is drawn to the possibility that some of the elements of this IEC Publication may be the subject of patent rights. IEC shall not be held responsible for identifying any or all such patent rights.

International Standard IEC 61076-3-110 has been prepared by subcommittee 48B: Electrical connectors, of IEC technical committee 48: Electrical connectors and mechanical structures for electrical and electronic equipment.

This third edition cancels and replaces the second edition published in 2012. This edition constitutes a technical revision.

The main technical changes with regard to the previous edition are as follows:

- IEC 61076-3-110 series connectors have been updated to support intermateability with IEC 60603-7-82 (up to 2 000 MHz) connectors, in addition to IEC 60603-7-71 (up to 1 000 MHz) connectors and IEC 60603-7-7 (up to 600 MHz) connectors for prior editions;
- the specifications cover electrical transmission requirements for frequencies up to 3 000 MHz.

AVA Documents
Document Sharing Hub

Full document details: IEC 61076-3-110 2016

The text of this standard is based on the following documents:

FDIS	Report on voting
48B/2496/FDIS	48B/2509/RVD

Full information on the voting for the approval of this standard can be found in the report on voting indicated in the above table.

This publication has been drafted in accordance with the ISO/IEC Directives, Part 2.

A list of all parts of IEC 61076 series, under the general title *Connectors for electronic equipment – Product requirements*, can be found on the IEC website.

The committee has decided that the contents of this publication will remain unchanged until the stability date indicated on the IEC website under "http://webstore.iec.ch" in the data related to the specific publication. At this date, the publication will be

- reconfirmed,
- withdrawn,
- replaced by a revised edition, or
- amended.

Documents
Document Sharing Hub

Full document details: IEC 61076-3-110 2016

INTRODUCTION

This detail specification describes connectors according to the IEC 61076-3 series connector requirements.

This detail specification describes connectors that are similar to, intermateable with, and intended to be used with IEC 60603-7 series connectors.

The IEC 61076-3-110 series connectors include alternative arrangements of additional contacts and features, which extend the functionality of the IEC 60603-7 series connectors.

This detail specification covers electrical transmission requirements for frequencies up to 3 000 MHz.

This detail specification describes connectors that support unshielded and three types of shielded cables used with separated pairs of contacts: individual pair unshielded, with or without an overall shield; and individual pair shielded, with or without an overall shield.

The IEC 60603-7 series connectors are typically used in ISO/IEC 11801 balanced cabling systems. The ISO/IEC 11801 balanced cabling systems are organized by categories according to frequency range and by basic cabling types according to shielding configurations.

Typically a IEC 61076-3-110 free connector, using the alternative four separated pairs' contacts, is mated with the IEC 60603-7-7, IEC 60603-7-71, or IEC 60603-7-82 fixed connectors operating in their higher-frequency mode.

The complete requirements for the connectors described herein are comprised by this detail specification and the current editions of IEC 61076-3 and IEC 60603-7 series, particularly IEC 60603-7-1, IEC 60603-7-7, IEC 60603-7-71, and IEC 60603-7-82, which are referenced herein accordingly.

Documents
Document Sharing Hub

Full document details: IEC 61076-3-110 2016

CONNECTORS FOR ELECTRONIC EQUIPMENT – PRODUCT REQUIREMENTS –

Part 3-110: Detail specification for free and fixed connectors for data transmission with frequencies up to 3 000 MHz

1 Scope

This part of IEC 61076 is a detail specification for two-part rectangular connectors.

This detail specification covers mechanical, electrical and environmental requirements and electrical transmission requirements for frequencies up to 3 000 MHz.These connector's transmission requirements are specifically intended for specific pairs of contacts, which are separated from the other pairs of contacts, such as by means of individual pair shields within the connector.

These connectors are similar to, intermateable with, and intended to be used with the IEC 60603-7 series connectors.

The IEC 60603-7 series connectors are typically used in ISO/IEC 11801 balanced cabling systems. The ISO/IEC 11801 balanced cabling systems are organized by categories according to frequency range and by basic cabling component types, e.g. according to shielding configurations.

A primary common feature among the IEC 60603-7 series connectors is backward compatibility to lower frequency categories. The IEC 61076-3-110 series connectors are backward compatible with IEC 60603-7-7, IEC 60603-7-71 and IEC 60603-7-82 connectors. The IEC 61076-3-110 series connectors are not backward compatible with some IEC 60603-7 series connectors.

2 Normative references

The following documents, in whole or in part, are normatively referenced in this document and are indispensable for its application. For dated references, only the edition cited applies. For undated references, the latest edition of the referenced document (including any amendments) applies.

IEC 60068-1, *Environmental testing – Part 1: General and guidance*

IEC 60512 (all parts), *Connectors for electronic equipment – Tests and measurements*

IEC 60512-1, *Connectors for electronic equipment – Tests and measurements – Part 1: General*

IEC 60512-25-9, *Connectors for electronic equipment – Tests and measurements – Part 25-9: Signal integrity tests – Test 25i: Alien crosstalk*

Documents
Document Sharing Hub

Full document details: IEC 61076-3-110 2016

IEC 60512-28-100, *Connectors for electronic equipment – Tests and measurements – Part 28-100: Signal integrity tests up to 1 000 MHz on IEC 60603-7 and IEC 61076-3 series connectors – Tests 28a to 28g*[1]

IEC 60603-7, *Connectors for electronic equipment – Part 7: Detail specification for 8-way, unshielded, free and fixed connectors*

IEC 60603-7-1, *Connectors for electronic equipment – Part 7-1: Detail specification for 8-way, shielded, free and fixed connectors*

IEC 60603-7-7:2010, *Connectors for electronic equipment – Part 7-7: Detail specification for 8-way, shielded, free and fixed connectors for data transmission with frequencies up to 600 MHz*

IEC 60603-7-71, *Connectors for electronic equipment – Part 7-71: Detail specification for 8-way, shielded, free and fixed connectors for data transmission with frequencies up to 1 000 MHz*

IEC 60603-7-82:—, *Connectors for electronic equipment – Part 7-82: Detail specification for 8-way, 12 contacts, shielded, free and fixed connectors, for data transmission with frequencies up to 2 000 MHz*[2]

IEC 61076-1, *Connectors for electronic equipment – Product requirements – Part 1: Generic specification*

IEC 62153-4-15:2015, *Metallic communication cable test methods – Part 4-15: Electromagnetic compatibility (EMC) – Test method for measuring transfer impedance and screening attenuation – or coupling attenuation with triaxial cell*

3 Terms and definitions

For the purposes of this document, the terms and definitions given in 2.1 of IEC 61076-1:2006, some terms and definitions from IEC 60512-1, and the following apply.

3.1
backward compatibility
set of requirements which ensure that a free or fixed connector which is in compliance with this standard, when mated with a fixed or free connector in compliance with a lower frequency IEC 60603-7 series connector, fully complies with the transmission performance requirements of the lower frequency IEC 60603-7 series connector.

Note 1 to entry: These IEC 61076-3-110 series connectors are backward compatible with IEC 60603-7-7, IEC 60603-7-71 and IEC 60603-7-82 connectors, and other IEC 60603-7 series connectors.

Note 2 to entry: The complete specification of the categories and the backward compatibility system for the IEC 60603-7 series connectors, when used in standard balanced cabling systems, is specified in referenced ISO/IEC 11801.

[SOURCE: IEC 60603-7-81:2015, 3.1, modified – The definition has been updated, Note 1 to entry has been modified and is now Note 2, a new Note 1 has been added and the additional reference to Clause 3 of IEC 60603-7-1:2011 has been deleted.]

---

1 The tests include frequencies up to 2 000 MHz.

2 To be published. Currently at FDIS stage. Is likely to be published at the same time as this document.

AVA Documents
Document Sharing Hub

Full document details: IEC 61076-3-110 2016

3.2
crosstalk loss
near-end-crosstalk (NEXT) and far-end-crosstalk (FEXT), commonly referred to as crosstalk loss, are the specific transmission characteristics associated with the reverse and forward crosstalk coupling attenuation between two pairs

4 Common features and isometric view

4.1 General

The IEC 61076-3-110 series connectors include alternative arrangements of additional contacts and features, which extend the functionality of the IEC 60603-7 series connectors.

The IEC 61076-3-110 series connectors include up to 12 contacts, including up to 8 contacts (1, 2, 3, 4, 5, 6, 7, 8) that are similar to a standard IEC 60603-7 series connector. In addition, the IEC 61076-3-110 connector includes up to 4 additional contacts (6’,3’,4’,5’) located on the side of the connector opposite from the original contacts’ positions of a basic IEC 60603-7 series connector (see Figure 3).

Typically a IEC 61076-3-110 free connector using alternative contacts is used in data communication cabling systems with the IEC 60603-7-7, IEC 60603-7-71, and IEC 60603-7-82, fixed connectors.

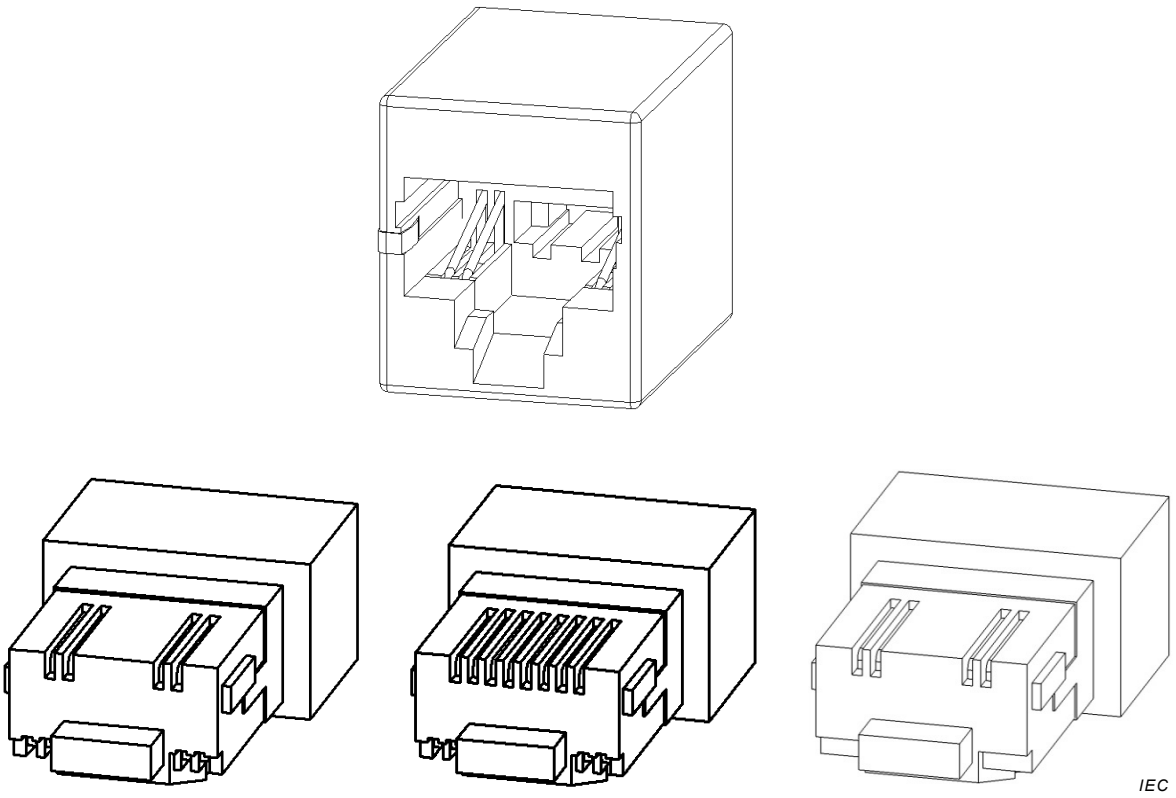

Figure 1 – Isometric view of fixed cable connector and free 4, 6 and 2 pair connectors, examples

Documents
Document Sharing Hub
Full document details: IEC 61076-3-110 2016

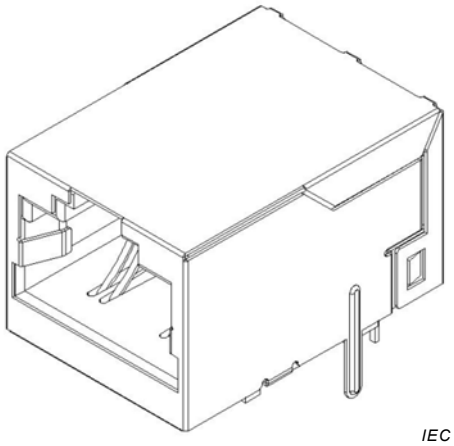

Figure 2 – Isometric view of fixed board connector, example

Fixed and free connectors may include cavities channels and related switch actuator protrusions for engaging features within IEC 60603-7-7, IEC 60603-7-71, and IEC 60603-7-82 connectors (see Figure 1 and Figure 2).

See IEC 60603-7-7 and IEC 60603-7-1 for views, dimensions and requirements.

4.2 Cable terminations and internal connections – Fixed and free connectors

These connectors typically use pin and pair numbering and grouping assignments similar to the IEC 60603-7 series connectors, as shown in Figure 3. The 8-contact type typically uses contact numbers 1, 2, 7, 8, 6’, 3’, 4’, 5’. The 4-contact type may use contact numbers 1, 2, 7, 8. For transmission requirements for the special case when contact numbers 3, 4, 5, 6, are arranged in pair combinations 3-6, 4-5, see other IEC 60603-7 series standards.

The complete specification for the pin and pair numbering and grouping assignments, for the IEC 60603-7 series connectors used in balanced cabling systems is specified in ISO/IEC 11801.

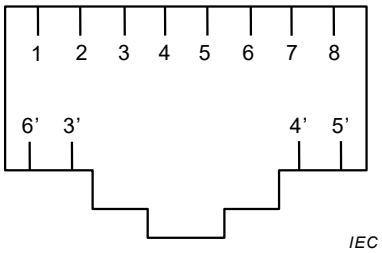

Figure 3 – Fixed connector pin numbering assignments (front view of connector), example

See IEC 60603-7-7 for cable termination and internal connection types.

4.3 Mating information

See IEC 60603-7-7 and IEC 60603-7-1 for views, dimensions and requirements.

4.4 Mounting information

Fixed and free connector mounting information is not specified and is to be determined by the manufacturer.

Documents
Document Sharing Hub
Full document details: IEC 61076-3-110 2016