IEC 61076-3-120

Edition 1.0 2016-08

INTERNATIONAL STANDARD

NORME INTERNATIONALE

Connectors for electronic equipment – Product requirements – Part 3-120: Rectangular connectors – Detail specification for rewirable power connectors with snap locking for rated voltage of 250 V d.c. and rated current of 30 A

Connecteurs pour équipements électroniques – Exigences de produit – Partie 3-120: Connecteurs rectangulaires – Spécification particulière pour connecteurs de puissance démontables à encliquetage pour une tension continue assignée de 250 V et un courant assigné de 30 A

IEC 61076-3-120:2016-08(en-fr)

Documents
Document Sharing Hub
Full document details: IEC 61076-3-120 2016

THIS PUBLICATION IS COPYRIGHT PROTECTED
Copyright © 2016 IEC, Geneva, Switzerland

All rights reserved. Unless otherwise specified, no part of this publication may be reproduced or utilized in any form or by any means, electronic or mechanical, including photocopying and microfilm, without permission in writing from either IEC or IEC's member National Committee in the country of the requester. If you have any questions about IEC copyright or have an enquiry about obtaining additional rights to this publication, please contact the address below or your local IEC member National Committee for further information.

Droits de reproduction réservés. Sauf indication contraire, aucune partie de cette publication ne peut être reproduite ni utilisée sous quelque forme que ce soit et par aucun procédé, électronique ou mécanique, y compris la photocopie et les microfilms, sans l'accord écrit de l'IEC ou du Comité national de l'IEC du pays du demandeur. Si vous avez des questions sur le copyright de l'IEC ou si vous désirez obtenir des droits supplémentaires sur cette publication, utilisez les coordonnées ci-après ou contactez le Comité national de l'IEC de votre pays de résidence.

IEC Central Office
3, rue de Varembé
CH-1211 Geneva 20
Switzerland

Tel.: +41 22 919 02 11
Fax: +41 22 919 03 00
info@iec.ch
www.iec.ch

About the IEC
The International Electrotechnical Commission (IEC) is the leading global organization that prepares and publishes International Standards for all electrical, electronic and related technologies.

About IEC publications
The technical content of IEC publications is kept under constant review by the IEC. Please make sure that you have the latest edition, a corrigenda or an amendment might have been published.

IEC Catalogue - webstore.iec.ch/catalogue
The stand-alone application for consulting the entire bibliographical information on IEC International Standards, Technical Specifications, Technical Reports and other documents. Available for PC, Mac OS, Android Tablets and iPad.

IEC publications search - www.iec.ch/searchpub
The advanced search enables to find IEC publications by a variety of criteria (reference number, text, technical committee,…). It also gives information on projects, replaced and withdrawn publications.

IEC Just Published - webstore.iec.ch/justpublished
Stay up to date on all new IEC publications. Just Published details all new publications released. Available online and also once a month by email.

Electropedia - www.electropedia.org
The world's leading online dictionary of electronic and electrical terms containing 20 000 terms and definitions in English and French, with equivalent terms in 15 additional languages. Also known as the International Electrotechnical Vocabulary (IEV) online.

IEC Glossary - std.iec.ch/glossary
65 000 electrotechnical terminology entries in English and French extracted from the Terms and Definitions clause of IEC publications issued since 2002. Some entries have been collected from earlier publications of IEC TC 37, 77, 86 and CISPR.

IEC Customer Service Centre - webstore.iec.ch/csc
If you wish to give us your feedback on this publication or need further assistance, please contact the Customer Service Centre: csc@iec.ch.

A propos de l'IEC
La Commission Electrotechnique Internationale (IEC) est la première organisation mondiale qui élabore et publie des Normes internationales pour tout ce qui a trait à l'électricité, à l'électronique et aux technologies apparentées.

A propos des publications IEC
Le contenu technique des publications IEC est constamment revu. Veuillez vous assurer que vous possédez l'édition la plus récente, un corrigendum ou amendement peut avoir été publié.

Catalogue IEC - webstore.iec.ch/catalogue
Application autonome pour consulter tous les renseignements bibliographiques sur les Normes internationales, Spécifications techniques, Rapports techniques et autres documents de l'IEC. Disponible pour PC, Mac OS, tablettes Android et iPad.

Recherche de publications IEC - www.iec.ch/searchpub
La recherche avancée permet de trouver des publications IEC en utilisant différents critères (numéro de référence, texte, comité d'études,…). Elle donne aussi des informations sur les projets et les publications remplacées ou retirées.

IEC Just Published - webstore.iec.ch/justpublished
Restez informé sur les nouvelles publications IEC. Just Published détaille les nouvelles publications parues. Disponible en ligne et aussi une fois par mois par email.

Electropedia - www.electropedia.org
Le premier dictionnaire en ligne de termes électroniques et électriques. Il contient 20 000 termes et définitions en anglais et en français, ainsi que les termes équivalents dans 15 langues additionnelles. Egalement appelé Vocabulaire Electrotechnique International (IEV) en ligne.

Glossaire IEC - std.iec.ch/glossary
65 000 entrées terminologiques électrotechniques, en anglais et en français, extraites des articles Termes et Définitions des publications IEC parues depuis 2002. Plus certaines entrées antérieures extraites des publications des CE 37, 77, 86 et CISPR de l'IEC.

Service Clients - webstore.iec.ch/csc
Si vous désirez nous donner des commentaires sur cette publication ou si vous avez des questions contactez-nous: csc@iec.ch.

Documents
Document Sharing Hub

Full document details: IEC 61076-3-120 2016

IEC 61076-3-120

Edition 1.0 2016-08

INTERNATIONAL STANDARD

NORME INTERNATIONALE

Connectors for electronic equipment – Product requirements – Part 3-120: Rectangular connectors – Detail specification for rewirable power connectors with snap locking for rated voltage of 250 V d.c. and rated current of 30 A

Connecteurs pour équipements électroniques – Exigences de produit – Partie 3-120: Connecteurs rectangulaires – Spécification particulière pour connecteurs de puissance démontables à encliquetage pour une tension continue assignée de 250 V et un courant assigné de 30 A

INTERNATIONAL
ELECTROTECHNICAL
COMMISSION

COMMISSION
ELECTROTECHNIQUE
INTERNATIONALE

ICS 31.220.10

ISBN 978-2-8322-3555-3

Warning! Make sure that you obtained this publication from an authorized distributor.
Attention! Veuillez vous assurer que vous avez obtenu cette publication via un distributeur agréé.

® Registered trademark of the International Electrotechnical Commission
Marque déposée de la Commission Electrotechnique Internationale

AVA Documents
Document Sharing Hub

Full document details: IEC 61076-3-120 2016

CONTENTS

FOREWORD....4
INTRODUCTION....7
1 Scope....8
2 Normative references....8
3 Terms and definitions....9
4 Technical information....9
4.1 Ratings and characteristics....9
4.2 Performance levels....9
4.3 Compatibility levels....9
4.4 Classification into climatic categories....9
4.5 Clearance and creepage distances....9
4.6 Current-carrying capacity....10
4.7 Marking....10
5 Dimensional information....10
5.1 General....10
5.2 Isometric view and common features (see Figure 1 and Figure 2)....10
5.3 Fixed connectors (see Figure 3 and Table 2)....11
5.3.1 Dimensions....11
5.3.2 Terminations....12
5.4 Free connectors (see Figure 4 and Table 3)....13
5.4.1 Dimensions....13
5.4.2 Terminations....14
5.5 Accessories....14
5.6 Mounting information....14
5.7 Gauges....14
5.7.1 Sizing gauges and retention force gauges (see Figure 5 and Table 4)....14
6 Characteristics....15
6.1 Classification into climatic categories....15
6.2 Electrical characteristics....15
6.2.1 Clearance and creepage distance....15
6.2.2 Voltage proof....15
6.2.3 Contact resistance....15
6.2.4 Insulation resistance....16
6.2.5 Temperature rise....16
6.3 Mechanical characteristics....16
6.3.1 Mechanical operation....16
6.3.2 Insertion and withdrawal forces....16
6.3.3 Contact retention in insert....16
6.3.4 Polarizing and coding method....17
6.3.5 Effectiveness of connector coupling devices....17
6.3.6 Conductor secureness....17
6.4 Dynamic stress test....17
6.4.1 Vibration (sine)....17
6.4.2 Shock....17
6.5 Climatic test....18
6.5.1 Damp heat steady state....18

AVA Documents
Document Sharing Hub
Full document details: IEC 61076-3-120 2016

6.5.2 Rapid change of temperature 18
6.5.3 Salt spray 18
6.5.4 Dry heat....18
6.6 Environmental aspects 18
6.6.1 Marking of insulation material (plastic)....18
6.6.2 Design/use of material 18
7 Test schedule 19
7.1 General....19
7.2 Test schedules....19
7.2.1 Basic (minimum) test schedule 19
7.2.2 Full test schedule....19
7.3 Test procedures and measurement methods 24
7.4 Pre-conditioning 24
7.5 Wiring and mounting of test specimens 24
7.5.1 Wiring 24
7.5.2 Mounting....24
Bibliography 25

Figure 1 – Isometric view of free connector 10
Figure 2 – Isometric view of fixed connector 10
Figure 3 – Fixed connector....11
Figure 4 – Free connector 13
Figure 5 – Gauge....15

Table 1 – Climatic categories 9
Table 2 – Dimensions of the fixed connector 12
Table 3 – Dimensions of the free connector....14
Table 4 – Gauge dimensions....15
Table 5 – Conductor secureness test 17
Table 6 – Number of test specimens 19
Table 7 – Test group P 19
Table 8 – Test group AP 20
Table 9 – Test group BP 21
Table 10 – Test group CP 22
Table 11 – Test group DP 22
Table 12 – Test group EP 23
Table 13 – Test group JP....23
Table 14 – Test group KP 24

Documents
Document Sharing Hub
Full document details: IEC 61076-3-120 2016

INTERNATIONAL ELECTROTECHNICAL COMMISSION

CONNECTORS FOR ELECTRONIC EQUIPMENT – PRODUCT REQUIREMENTS –

Part 3-120: Rectangular connectors – Detail specification for rewirable power connectors with snap locking for rated voltage of 250 V d.c. and rated current of 30 A

FOREWORD

1) The International Electrotechnical Commission (IEC) is a worldwide organization for standardization comprising all national electrotechnical committees (IEC National Committees). The object of IEC is to promote international co-operation on all questions concerning standardization in the electrical and electronic fields. To this end and in addition to other activities, IEC publishes International Standards, Technical Specifications, Technical Reports, Publicly Available Specifications (PAS) and Guides (hereafter referred to as "IEC Publication(s)"). Their preparation is entrusted to technical committees; any IEC National Committee interested in the subject dealt with may participate in this preparatory work. International, governmental and non-governmental organizations liaising with the IEC also participate in this preparation. IEC collaborates closely with the International Organization for Standardization (ISO) in accordance with conditions determined by agreement between the two organizations.
2) The formal decisions or agreements of IEC on technical matters express, as nearly as possible, an international consensus of opinion on the relevant subjects since each technical committee has representation from all interested IEC National Committees.
3) IEC Publications have the form of recommendations for international use and are accepted by IEC National Committees in that sense. While all reasonable efforts are made to ensure that the technical content of IEC Publications is accurate, IEC cannot be held responsible for the way in which they are used or for any misinterpretation by any end user.
4) In order to promote international uniformity, IEC National Committees undertake to apply IEC Publications transparently to the maximum extent possible in their national and regional publications. Any divergence between any IEC Publication and the corresponding national or regional publication shall be clearly indicated in the latter.
5) IEC itself does not provide any attestation of conformity. Independent certification bodies provide conformity assessment services and, in some areas, access to IEC marks of conformity. IEC is not responsible for any services carried out by independent certification bodies.
6) All users should ensure that they have the latest edition of this publication.
7) No liability shall attach to IEC or its directors, employees, servants or agents including individual experts and members of its technical committees and IEC National Committees for any personal injury, property damage or other damage of any nature whatsoever, whether direct or indirect, or for costs (including legal fees) and expenses arising out of the publication, use of, or reliance upon, this IEC Publication or any other IEC Publications.
8) Attention is drawn to the Normative references cited in this publication. Use of the referenced publications is indispensable for the correct application of this publication.
9) Attention is drawn to the possibility that some of the elements of this IEC Publication may be the subject of patent rights. IEC shall not be held responsible for identifying any or all such patent rights.

International Standard IEC 61076-3-120 has been prepared by subcommittee 48B: Electrical connectors, of IEC technical committee 48: Electrical connectors and mechanical structures for electrical and electronic equipment.

The text of this standard is based on the following documents:

FDIS	Report on voting
48B/2498/FDIS	48B/2511/RVD

Full information on the voting for the approval of this standard can be found in the report on voting indicated in the above table.

Documents
Document Sharing Hub

Full document details: IEC 61076-3-120 2016

This publication has been drafted in accordance with the ISO/IEC Directives, Part 2.

The committee has decided that the contents of this publication will remain unchanged until the stability date indicated on the IEC website under "http://webstore.iec.ch" in the data related to the specific publication. At this date, the publication will be

- reconfirmed,
- withdrawn,
- replaced by a revised edition, or
- amended.

Documents
Document Sharing Hub

Full document details: IEC 61076-3-120 2016

The International Electrotechnical Commission IEC SC 48B —Electrical connectors	IEC 61076-3-120
Detail specification in accordance with IEC 61076-3	
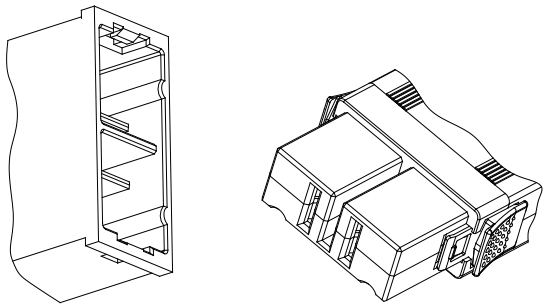	Rewirable power connectors with snap locking for rated voltage of 250 V d.c. and rated current of 30 A
	Fixed and free connectors, for telecommunication equipment

Documents
Document Sharing Hub
Full document details: IEC 61076-3-120 2016

INTRODUCTION

The International Electrotechnical Commission (IEC) draws attention to the fact that it is claimed that compliance with this document may involve the use of a patent concerning connectors given in this specification.

The IEC takes no position concerning the evidence, validity and scope of this patent right.

The holder of this patent right has assured the IEC that he/she is willing to give free licences with applicants throughout the world. In this respect, the statement of the holder of this patent right is registered with the IEC.

Information may be obtained from:

Sichuan Huafeng Enterprise Group Co., Ltd.

Product and Market Planning Department

No.36 Yuejin Road, Mianyang, Sichuan, China

Telephone: 0086-816-231 1322

FAX: 0086-816-233 2716

Email: pangbin@huafeng796.com

Attention is drawn to the possibility that some of the elements of this document may be the subject of patent rights other than those identified above. IEC shall not be held responsible for identifying any or all such patent rights.

ISO (www.iso.org/patents) and IEC (http://patents.iec.ch) maintain on-line data bases of patents relevant to their standards. Users are encouraged to consult the data bases for the most up to date information concerning patents.

Documents
Document Sharing Hub

Full document details: IEC 61076-3-120 2016

CONNECTORS FOR ELECTRONIC EQUIPMENT – PRODUCT REQUIREMENTS –

Part 3-120: Rectangular connectors – Detail specification for rewirable power connectors with snap locking for rated voltage of 250 V d.c. and rated current of 30 A

1 Scope

This part of IEC 61076-3 describes a 2 pole 30 A rectangular power connector with snap locking (hereinafter shortly referred to as connector), including overall dimensions, interface dimensions, technical characteristics, performance requirements and test methods.

The products covered by this detail specification are connectors without breaking capacity according to IEC 61984:2008 which are mainly for use in DC power distribution equipment in the telecommunications field, such as in outdoor telecom modules, distributed frames, etc.

2 Normative references

The following documents, in whole or in part, are normatively referenced in this document and are indispensable for its application. For dated references, only the edition cited applies. For undated references, the latest edition of the referenced document (including any amendments) applies.

IEC 60050-581:2008, *International Electrotechnical Vocabulary – Part 581: Electro-mechanical components for electronic equipment*

IEC 60068-1, *Environmental testing – Part 1: General and guidance*

IEC 60228:2004, *Conductors of insulated cables*

IEC 60352 (all parts), *Solderless connections*

IEC 60512 (all parts), *Connectors for electronic equipment – Tests and measurements*

IEC 60512-1-2:2002, *Connectors for electronic equipment – Tests and measurements – Part 1-2: General examination*

IEC 60999-1:1999, *Connecting devices – Electrical copper conductors – Safety requirements for screw type and screwless-type clamping units – Part 1: General requirements and particular requirements for clamping units for conductors from 0,2 mm^2 up to 35 mm^2 (included)*

IEC 61076-1:2006, *Connectors for electronic equipment – Part 1: Generic specification*

IEC 61076-3:2008, *Connectors for electronic equipment – Product requirements – Part 3: Rectangular connectors – Sectional specification*

IEC 61984:2008, *Connectors – Safety requirements and tests*

IEC 62430, *Environmentally conscious design for electrical and electronic products*

AVA Documents
Document Sharing Hub

Full document details: IEC 61076-3-120 2016

IEC Guide 109, *Environmental aspects – Inclusion in electrotechnical product standards*

3 Terms and definitions

For the purposes of this document, the terms and definitions given in IEC 60050-581 apply.

4 Technical information

4.1 Ratings and characteristics

Connectors according this specification are connectors without breaking capacity (COC) according to IEC 61984. Therefore, they are not intended to be engaged or disengaged in normal use when live or under load, if not otherwise specified by the manufacturer.

Rated voltage: 250 V d.c., overvoltage category: 4 kV, pollution degree: 3.

Rated current: 30 A

Insulation resistance: ≥1 000 MΩ.

Suitable wire: cross-sectional area 1 mm^2 to 4 mm^2, single-core or multi-core.

4.2 Performance levels

Performance level for this connector is 1.

4.3 Compatibility levels

Connectors according to this standard are intermateable according to IEC 61076-1:2006.

4.4 Classification into climatic categories

Conditions: according to IEC 60068-1 and Table 1.

Table 1 – Climatic categories

Climatic category	Lower temperature °C	Upper temperature °C	Damp heat steady state (days)
55/125/4	–55	125	4

4.5 Clearance and creepage distances

Clearance and creepage distances shall be measured according to IEC 60512-1-2 with the following additional requirement.

For these connectors clearance and creepage distances shall be measured only in mated position (connector without breaking capacity as defined in IEC 61984).

Minimum clearance: 3,0 mm.

Minimum creepage distance: 4,0 mm.

Documents
Document Sharing Hub

Full document details: IEC 61076-3-120 2016

4.6 Current-carrying capacity

The current-carrying capacity shall be measured according to IEC 60512, Test 5b and stated by the manufacturer.

4.7 Marking

The marking of the connector and the package shall be in accordance with 2.7 of IEC 61076-1:2006.

NOTE Additional marking may be required, see 6.6.1.

5 Dimensional information

5.1 General

Dimensions are given in millimetres, drawings are shown in third angle projection. The shape of the connectors may deviate from those given in the following drawings as long as the specified dimensions are not influenced.

For safety aspects IEC 61984 shall be considered unless otherwise specified.

Missing dimensions shall be chosen according to the common characteristics and intended use.

5.2 Isometric view and common features (see Figure 1 and Figure 2)

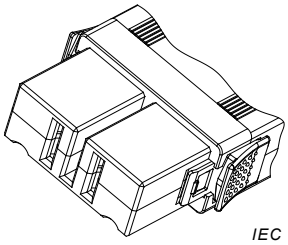

Figure 1 – Isometric view of free connector

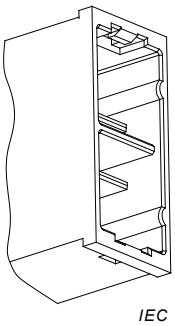

Figure 2 – Isometric view of fixed connector

Documents
Document Sharing Hub
Full document details: IEC 61076-3-120 2016

5.3 Fixed connectors (see Figure 3 and Table 2)

5.3.1 Dimensions

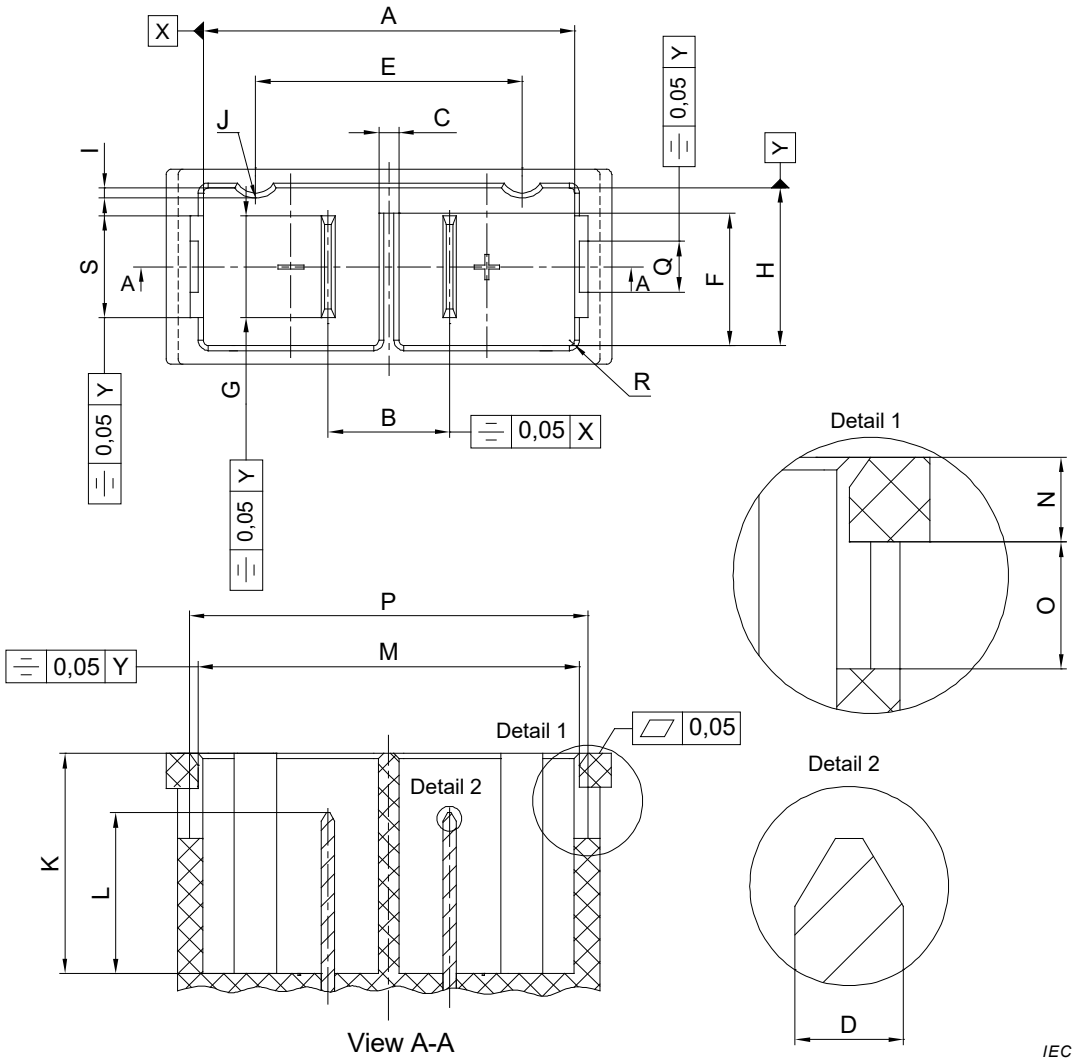

Figure 3 – Fixed connector

Documents
Document Sharing Hub
Full document details: IEC 61076-3-120 2016

Table 2 – Dimensions of the fixed connector

Dimensions in mm

Letter	Minimum	Nominal	Maximum
A	22	22	22,3
B	7,15	7,2	7,25
C	1,15	1,2	1,25
D	0,765	0,8	0,835
E	15,7	15,8	15,9
F	7,6	7,8	7,8
G	5,95	6	6,05
H	9,3	9,3	9,45
I	0,55	0,6	0,65
J	R1,5	R1,6	R1,7
K	12,85	13	13,15
L	–	–	9,5
M	22,62	22,7	22,78
N	1,9	2	2
O	7,5	7,5	7,6
P	23,55	23,6	23,65
Q	–	3	–
R	R0,25	R0,3	R0,35
S	6	6	6,05

5.3.2 Terminations

Any termination type in accordance with the relevant IEC standards may apply.

Documents
Document Sharing Hub

Full document details: IEC 61076-3-120 2016

5.4 Free connectors (see Figure 4 and Table 3)

5.4.1 Dimensions

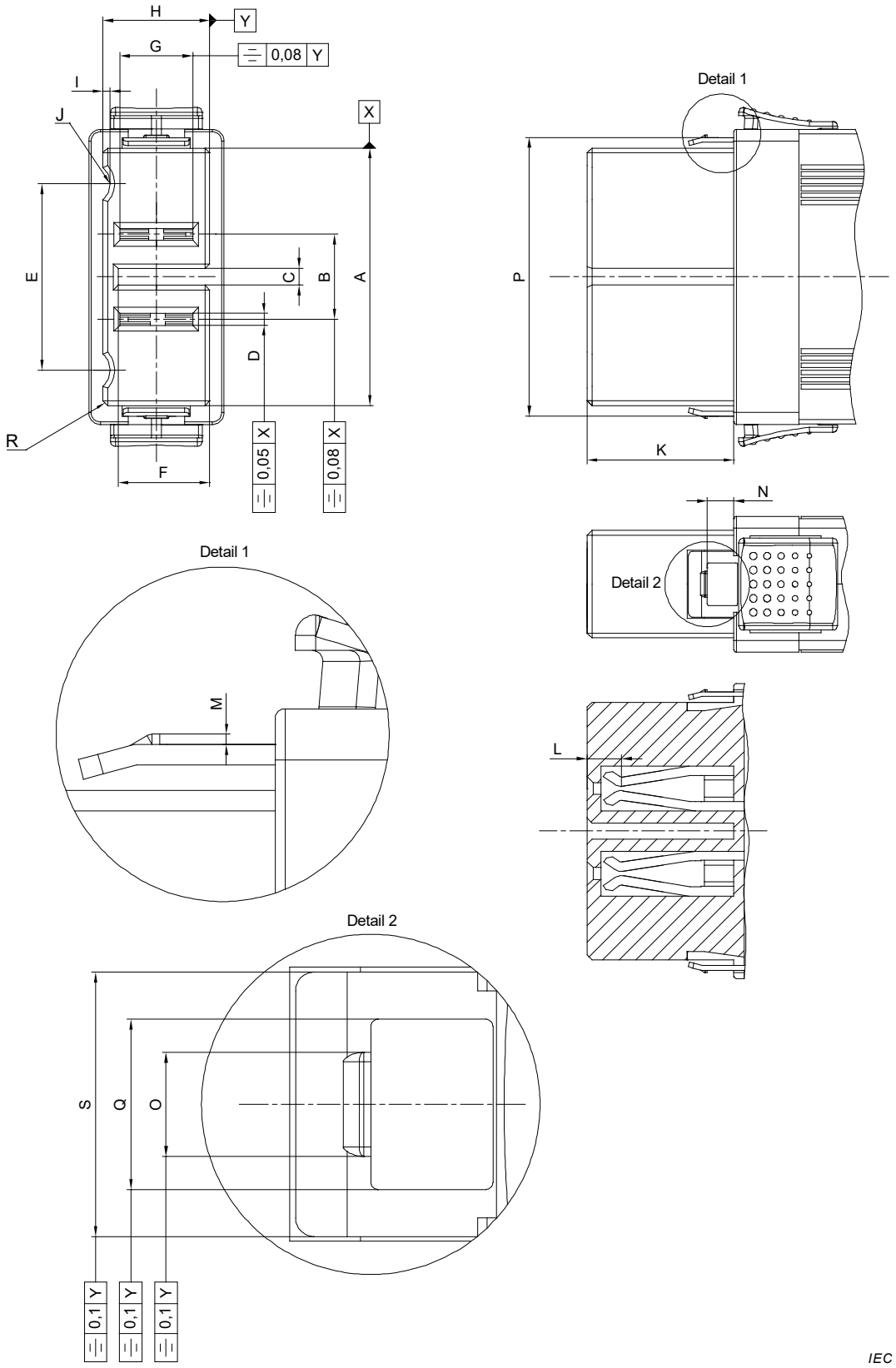

Figure 4 – Free connector

Documents
Document Sharing Hub
Full document details: IEC 61076-3-120 2016

Table 3 – Dimensions of the free connector

Dimensions in mm

Letter	Minimum	Nominal	Maximum
A	21,65	21,8	21,95
B	7,12	7,2	7,28
C	1,35	1,4	1,5
D	0,95	1	1,1
E	15,7	15,8	15,9
F	7,8	7,8	7,95
G	6,2	6,2	6,35
H	9,0	9,1	9,2
I	0,55	0,6	0,65
J	R1,8	R1,9	R2,0
K	12,25	12,5	12,75
L	–	–	4
M	0,16	0,2	0,24
N	2,2	2,2	2,3
O	1,9	2,2	2,2
P	23,7	24,1	24,5
Q	3,6	3,6	3,7
R	–	0,4 × 45°	–
S	5,5	5,6	5,6

5.4.2 Terminations

Any termination type in accordance with the relevant IEC standards may apply.

5.5 Accessories

(Not applicable.)

5.6 Mounting information

Mounting information could be specified upon agreement between manufacturer and customer.

5.7 Gauges

5.7.1 Sizing gauges and retention force gauges (see Figure 5 and Table 4)

Material: tool steel, with hardness of HRC: 60 ~ 64 and surface roughness of 0,8 μm.

Documents
Document Sharing Hub

Full document details: IEC 61076-3-120 2016

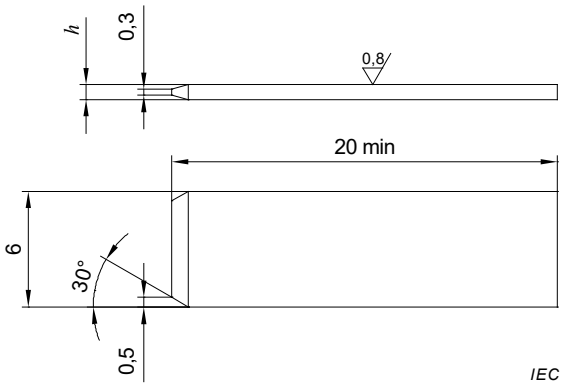

Figure 5 – Gauge

Table 4 – Gauge dimensions

Gauge	Mass g	Application	*h* mm
P1	–	Sizing	$0{,}83^{+0{,}005}_{0}$
P2	20	Retention force	$0{,}77^{0}_{-0{,}005}$

6 Characteristics

6.1 Classification into climatic categories

Connectors are classified into climatic categories in accordance with the general rules given in IEC 60068-1. The lowest and highest temperatures and the duration of the damp heat, steady state test shall be selected from the preferred values stated in 2.3 of IEC 61076-1:2006, see Table 1.

6.2 Electrical characteristics

6.2.1 Clearance and creepage distance

See 4.5.

Application information – The permissible rated voltage depends on the application or specified safety requirements. Reductions in creepage or clearance distances may occur due to the printed board or wiring used, and shall duly be taken into account.

6.2.2 Voltage proof

Conditions: IEC 60512, Test 4a.

Standard atmospheric conditions, unmated connectors.

Requirements: 1 000 V d.c.

6.2.3 Contact resistance

6.2.3.1 Initial contact resistance

Conditions: IEC 60512, Test 2a.

Standard atmospheric conditions, mated connectors.

Requirements: 5 mΩ max.

Documents
Document Sharing Hub
Full document details: IEC 61076-3-120 2016