IEC 61076-8-100

Edition 1.0 2020-04

INTERNATIONAL STANDARD

NORME INTERNATIONALE

Connectors for electrical and electronic equipment – Product requirements – Part 8-100: Power connectors – Detail specification for 2-pole or 3-pole power plus 2-pole signal shielded and sealed connectors with plastic housing for rated current of 20 A

Connecteurs pour équipements électriques et électroniques – Exigences de produit – Partie 8-100: Connecteurs électriques – Spécification particulière pour connecteurs blindés étanches à 2 pôles ou 3 pôles pour la transmission de puissance et à 2 pôles pour la transmission de données avec boîtier plastique pour courant assigné de 20 A

IEC 61076-8-100:2020-04(en-fr)

Documents
Document Sharing Hub

Full document details: IEC 61076-8-100-2020

THIS PUBLICATION IS COPYRIGHT PROTECTED
Copyright © 2020 IEC, Geneva, Switzerland

All rights reserved. Unless otherwise specified, no part of this publication may be reproduced or utilized in any form or by any means, electronic or mechanical, including photocopying and microfilm, without permission in writing from either IEC or IEC's member National Committee in the country of the requester. If you have any questions about IEC copyright or have an enquiry about obtaining additional rights to this publication, please contact the address below or your local IEC member National Committee for further information.

Droits de reproduction réservés. Sauf indication contraire, aucune partie de cette publication ne peut être reproduite ni utilisée sous quelque forme que ce soit et par aucun procédé, électronique ou mécanique, y compris la photocopie et les microfilms, sans l'accord écrit de l'IEC ou du Comité national de l'IEC du pays du demandeur. Si vous avez des questions sur le copyright de l'IEC ou si vous désirez obtenir des droits supplémentaires sur cette publication, utilisez les coordonnées ci-après ou contactez le Comité national de l'IEC de votre pays de résidence.

IEC Central Office
3, rue de Varembé
CH-1211 Geneva 20
Switzerland

Tel.: +41 22 919 02 11
info@iec.ch
www.iec.ch

About the IEC
The International Electrotechnical Commission (IEC) is the leading global organization that prepares and publishes International Standards for all electrical, electronic and related technologies.

About IEC publications
The technical content of IEC publications is kept under constant review by the IEC. Please make sure that you have the latest edition, a corrigendum or an amendment might have been published.

IEC publications search - webstore.iec.ch/advsearchform
The advanced search enables to find IEC publications by a variety of criteria (reference number, text, technical committee,…). It also gives information on projects, replaced and withdrawn publications.

IEC Just Published - webstore.iec.ch/justpublished
Stay up to date on all new IEC publications. Just Published details all new publications released. Available online and once a month by email.

IEC Customer Service Centre - webstore.iec.ch/csc
If you wish to give us your feedback on this publication or need further assistance, please contact the Customer Service Centre: sales@iec.ch.

Electropedia - www.electropedia.org
The world's leading online dictionary on electrotechnology, containing more than 22 000 terminological entries in English and French, with equivalent terms in 16 additional languages. Also known as the International Electrotechnical Vocabulary (IEV) online.

IEC Glossary - std.iec.ch/glossary
67 000 electrotechnical terminology entries in English and French extracted from the Terms and Definitions clause of IEC publications issued since 2002. Some entries have been collected from earlier publications of IEC TC 37, 77, 86 and CISPR.

A propos de l'IEC
La Commission Electrotechnique Internationale (IEC) est la première organisation mondiale qui élabore et publie des Normes internationales pour tout ce qui a trait à l'électricité, à l'électronique et aux technologies apparentées.

A propos des publications IEC
Le contenu technique des publications IEC est constamment revu. Veuillez vous assurer que vous possédez l'édition la plus récente, un corrigendum ou amendement peut avoir été publié.

Recherche de publications IEC - webstore.iec.ch/advsearchform
La recherche avancée permet de trouver des publications IEC en utilisant différents critères (numéro de référence, texte, comité d'études,…). Elle donne aussi des informations sur les projets et les publications remplacées ou retirées.

IEC Just Published - webstore.iec.ch/justpublished
Restez informé sur les nouvelles publications IEC. Just Published détaille les nouvelles publications parues. Disponible en ligne et une fois par mois par email.

Service Clients - webstore.iec.ch/csc
Si vous désirez nous donner des commentaires sur cette publication ou si vous avez des questions contactez-nous: sales@iec.ch.

Electropedia - www.electropedia.org
Le premier dictionnaire d'électrotechnologie en ligne au monde, avec plus de 22 000 articles terminologiques en anglais et en français, ainsi que les termes équivalents dans 16 langues additionnelles. Egalement appelé Vocabulaire Electrotechnique International (IEV) en ligne.

Glossaire IEC - std.iec.ch/glossary
67 000 entrées terminologiques électrotechniques, en anglais et en français, extraites des articles Termes et Définitions des publications IEC parues depuis 2002. Plus certaines entrées antérieures extraites des publications des CE 37, 77, 86 et CISPR de l'IEC.

Documents
Document Sharing Hub

Full document details: IEC 61076-8-100-2020

IEC 61076-8-100

Edition 1.0 2020-04

INTERNATIONAL STANDARD

NORME INTERNATIONALE

Connectors for electrical and electronic equipment – Product requirements – Part 8-100: Power connectors – Detail specification for 2-pole or 3-pole power plus 2-pole signal shielded and sealed connectors with plastic housing for rated current of 20 A

Connecteurs pour équipements électriques et électroniques – Exigences de produit – Partie 8-100: Connecteurs électriques – Spécification particulière pour connecteurs blindés étanches à 2 pôles ou 3 pôles pour la transmission de puissance et à 2 pôles pour la transmission de données avec boîtier plastique pour courant assigné de 20 A

INTERNATIONAL
ELECTROTECHNICAL
COMMISSION

COMMISSION
ELECTROTECHNIQUE
INTERNATIONALE

ICS 31.220.10

ISBN 978-2-8322-8068-3

Warning! Make sure that you obtained this publication from an authorized distributor.
Attention! Veuillez vous assurer que vous avez obtenu cette publication via un distributeur agréé.

® Registered trademark of the International Electrotechnical Commission
Marque déposée de la Commission Electrotechnique Internationale

AVA Documents
Document Sharing Hub

Full document details: IEC 61076-8-100-2020

CONTENTS

FOREWORD 5
1 Scope 8
2 Normative references 8
3 Terms and definitions 11
4 Technical information 11
4.1 Recommended method of termination 11
4.1.1 General 11
4.1.2 Number of contacts and contact cavities 11
4.2 Ratings and characteristics 11
4.3 Systems of levels 11
4.3.1 Performance levels 11
4.3.2 Compatibility levels 12
4.4 Classification into climatic categories 12
4.5 Clearance and creepage distance 12
4.6 Current-carrying capacity 12
4.7 Marking 12
5 Dimensional information 12
5.1 General 12
5.2 Isometric view and common features 12
5.2.1 Isometric view of free connectors 13
5.2.2 Isometric view of fixed connectors 13
5.3 Engagement (mating) information 13
5.3.1 General 13
5.3.2 Perpendicular to the engaging (mating) direction 13
5.3.3 Inclination 13
5.4 Fixed connectors 13
5.4.1 General 13
5.4.2 Dimensions 14
5.4.3 Terminations 17
5.5 Free connectors 17
5.5.1 General 17
5.5.2 Dimensions 18
5.5.3 Terminations 21
5.6 Accessories 21
5.7 Mounting information for connectors 21
5.8 Gauges: Sizing gauges and retention force gauges 21
6 Technical characteristics 22
6.1 Classification into climatic categories 22
6.2 Electrical characteristics 22
6.2.1 Clearance and creepage distance 22
6.2.2 Voltage proof 22
6.2.3 Contact resistance 23
6.2.4 Housing (shell) electrical continuity 23
6.2.5 Insulation resistance 23
6.2.6 Temperature rise 24
6.2.7 Electrical load and temperature 24

AVA Documents
Document Sharing Hub
Full document details: IEC 61076-8-100-2020

6.3 Mechanical characteristics ... 24
6.3.1 Mechanical operation ... 24
6.3.2 Effectiveness of connector coupling devices ... 24
6.3.3 Gauge retention force (resilient contact) ... 25
6.3.4 Engaging and separating forces ... 25
6.3.5 Contact retention in insert ... 25
6.3.6 Polarizing and keying method ... 25
6.4 Dynamic stress test ... 25
6.4.1 Vibration (sine) ... 25
6.4.2 Shock ... 26
6.4.3 Free fall (repeated) ... 26
6.4.4 IP degree of protection ... 26
6.4.5 Glow-wire flammability test method for end-products (GWEPT) ... 26
6.5 Climatic test ... 26
6.5.1 Damp heat, steady state ... 26
6.5.2 Rapid change of temperature ... 26
6.5.3 Corrosion, salt mist ... 27
6.5.4 Dry heat ... 27
6.5.5 Cold ... 27
6.5.6 Low air pressure ... 27
6.6 Environmental aspects ... 27
6.6.1 Marking of insulation material (plastic) ... 27
6.6.2 Design/use of material ... 27
7 Test schedule ... 28
7.1 General ... 28
7.2 Test schedules ... 28
7.2.1 Basic (minimum) test schedule ... 28
7.2.2 Full test schedule ... 28
7.3 Test procedures and measurement methods ... 38
7.4 Pre-conditioning ... 38
7.5 Wiring and mounting of test specimens ... 38
7.5.1 Wiring ... 38
7.5.2 Mounting ... 38

Figure 1 – 2-pole and 3-pole free connectors ... 13
Figure 2 – 2-pole and 3-pole fixed connectors ... 13
Figure 3 – 2-pole 20 A fixed connector ... 14
Figure 4 – 3-pole 20 A fixed connector ... 15
Figure 5 – Fixed connector codings ... 16
Figure 6 – 2-pole 20 A free connector ... 18
Figure 7 – 3-pole 20 A free connector ... 19
Figure 8 – Free connector codings ... 20
Figure 9 – Gauge for signal contact ... 21
Figure 10 – Gauge for power contact ... 22

Table 1 – Climatic categories ... 12
Table 2 – 2-pole 20 A fixed connector dimensions ... 14

AVA Documents
Document Sharing Hub
Full document details: IEC 61076-8-100-2020

Table 3 – 3-pole 20 A fixed connector dimensions 15
Table 4 – Fixed connector codings dimensions 17
Table 5 – 2-pole 20 A free connector dimensions 18
Table 6 – 3-pole 20 A free connector dimensions 19
Table 7 – Free connector codings dimensions 21
Table 8 – Gauge dimensions 22
Table 9 – Voltage proof 23
Table 10 – Vibration 25
Table 11 – Number of test specimens 28
Table 12 – Test group P 29
Table 13 – Test group AP 30
Table 14 – Test group BP 32
Table 15 – Test group CP 33
Table 16 – Test group DP 34
Table 17 – Test group EP 35
Table 18 – Test group GP 36
Table 19 – Test group JP 36
Table 20 – Test group KP 37

Documents
Document Sharing Hub
Full document details: IEC 61076-8-100-2020

INTERNATIONAL ELECTROTECHNICAL COMMISSION

CONNECTORS FOR ELECTRICAL AND ELECTRONIC EQUIPMENT – PRODUCT REQUIREMENTS –

Part 8-100: Power connectors – Detail specification for 2-pole or 3-pole power plus 2-pole signal shielded and sealed connectors with plastic housing for rated current of 20 A

FOREWORD

1) The International Electrotechnical Commission (IEC) is a worldwide organization for standardization comprising all national electrotechnical committees (IEC National Committees). The object of IEC is to promote international co-operation on all questions concerning standardization in the electrical and electronic fields. To this end and in addition to other activities, IEC publishes International Standards, Technical Specifications, Technical Reports, Publicly Available Specifications (PAS) and Guides (hereafter referred to as "IEC Publication(s)"). Their preparation is entrusted to technical committees; any IEC National Committee interested in the subject dealt with may participate in this preparatory work. International, governmental and non-governmental organizations liaising with the IEC also participate in this preparation. IEC collaborates closely with the International Organization for Standardization (ISO) in accordance with conditions determined by agreement between the two organizations.
2) The formal decisions or agreements of IEC on technical matters express, as nearly as possible, an international consensus of opinion on the relevant subjects since each technical committee has representation from all interested IEC National Committees.
3) IEC Publications have the form of recommendations for international use and are accepted by IEC National Committees in that sense. While all reasonable efforts are made to ensure that the technical content of IEC Publications is accurate, IEC cannot be held responsible for the way in which they are used or for any misinterpretation by any end user.
4) In order to promote international uniformity, IEC National Committees undertake to apply IEC Publications transparently to the maximum extent possible in their national and regional publications. Any divergence between any IEC Publication and the corresponding national or regional publication shall be clearly indicated in the latter.
5) IEC itself does not provide any attestation of conformity. Independent certification bodies provide conformity assessment services and, in some areas, access to IEC marks of conformity. IEC is not responsible for any services carried out by independent certification bodies.
6) All users should ensure that they have the latest edition of this publication.
7) No liability shall attach to IEC or its directors, employees, servants or agents including individual experts and members of its technical committees and IEC National Committees for any personal injury, property damage or other damage of any nature whatsoever, whether direct or indirect, or for costs (including legal fees) and expenses arising out of the publication, use of, or reliance upon, this IEC Publication or any other IEC Publications.
8) Attention is drawn to the Normative references cited in this publication. Use of the referenced publications is indispensable for the correct application of this publication.
9) Attention is drawn to the possibility that some of the elements of this IEC Publication may be the subject of patent rights. IEC shall not be held responsible for identifying any or all such patent rights.

International Standard IEC 61076-8-100 has been prepared by subcommittee 48B: Electrical connectors, of IEC technical committee 48: Electrical connectors and mechanical structures for electrical and electronic equipment.

The text of this standard is based on the following documents:

FDIS	Report on voting
48B/2782/FDIS	48B/2798/RVD

Full information on the voting for the approval of this standard can be found in the report on voting indicated in the above table.

Documents
Document Sharing Hub

Full document details: IEC 61076-8-100-2020

This publication has been drafted in accordance with the ISO/IEC Directives, Part 2.

A list of all parts in the IEC 61076 series, published under the general title *Connectors for electrical and electronic equipment – Product requirements*, can be found on the IEC website.

Future standards in this series will carry the new general title as cited above. Titles of existing standards in this series will be updated at the time of the next edition.

The committee has decided that the contents of this publication will remain unchanged until the stability date indicated on the IEC web site under "http://webstore.iec.ch" in the data related to the specific publication. At this date, the publication will be

- reconfirmed,
- withdrawn,
- replaced by a revised edition, or
- amended.

Documents
Document Sharing Hub

Full document details: IEC 61076-8-100-2020

The International Electrotechnical Commission **IEC SC 48B – Electrical connectors**		**IEC 61076-8-100**
Detail specification in accordance with IEC 61076-1		
Free connector	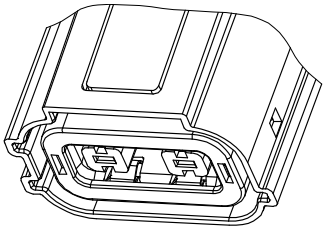 2-pole 20 A free connector 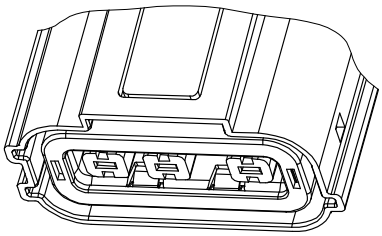 3-pole 20 A free connector	For rated current of 20 A d.c.; 2-pole; Female contacts for power; First break last make male contacts for signal; Straight insertion and withdrawal; 360° shielding; Four codings. For rated current of 20 A a.c.; 3-pole; Female contacts for power; First break last make male contacts for signal; Straight insertion and withdrawal; 360° shielding; Four codings.
Fixed connector	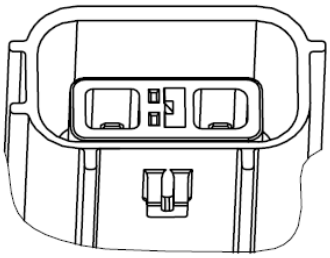 2-pole 20 A fixed connector 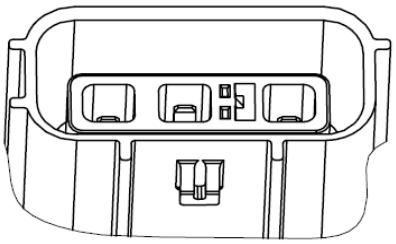 3-pole 20 A fixed connector	For rated current of 20 A d.c.; 2-pole; Female contacts for signal; Male contacts for power; Straight insertion and withdrawal; 360°shielding; Four codings. For rated current of 20 A a.c.; 3-pole; Female contacts for signal; Male contacts for power; Straight insertion and withdrawal; 360°shielding; Four codings.

Documents
Document Sharing Hub
Full document details: IEC 61076-8-100-2020

CONNECTORS FOR ELECTRICAL AND ELECTRONIC EQUIPMENT – PRODUCT REQUIREMENTS –

Part 8-100: Power connectors – Detail specification for 2-pole or 3-pole power plus 2-pole signal shielded and sealed connectors with plastic housing for rated current of 20 A

1 Scope

This part of IEC 61076 describes 2-pole or 3-pole power plus 2-pole signal shielded and sealed connectors with plastic housing (hereinafter referred to as a connector) for electrical and electronic equipment, including overall dimensions, interface dimensions, technical characteristics, performance requirements and test methods.

This document is applicable to electrical connectors with sealing and shielding requirements meeting this document, with a rated voltage up to and including 750 V a.c. or 1 000 V d.c. and a current rating of 20 A, for applications in the field of electrical and electronic equipment.

2 Normative references

The following documents are referred to in the text in such a way that some or all of their content constitutes requirements of this document. For dated references, only the edition cited applies. For undated references, the latest edition of the referenced document (including any amendments) applies.

IEC 60050-581:2008, *International Electrotechnical Vocabulary (IEV) – Part 581: Electromechanical components for electronic equipment*

IEC 60068-1, *Environmental testing – Part 1: General and guidance*

IEC 60228:2004, *Conductors of insulated cables*

IEC 60352-1, *Solderless connections – Part 1: Wrapped connections – General requirements, test methods and practical guidance*

IEC 60352-2, *Solderless connections – Part 2: Crimped connections – General requirements, test methods and practical guidance*

IEC 60352-3, *Solderless connections – Part 3: Solderless accessible insulation displacement connections – General requirements, test methods and practical guidance*

IEC 60352-4, *Solderless connections – Part 4: Solderless non-accessible insulation displacement connections – General requirements, test methods and practical guidance*

IEC 60352-5, *Solderless connections – Part 5: Press-in connections – General requirements, test methods and practical guidance*

IEC 60352-6, *Solderless connections – Part 6: Insulation piercing connections – General requirements, test methods and practical guidance*

IEC 60352-7, *Solderless connections – Part 7: Spring clamp connections – General requirements, test methods and practical guidance*

AVA Documents
Document Sharing Hub

Full document details: IEC 61076-8-100-2020

IEC 60512-1-1, *Connectors for electronic equipment – Tests and measurements – Part 1-1: General examination – Test 1a: Visual examination*

IEC 60512-1-2, *Connectors for electronic equipment – Test and measurements – Part 1-2: General examination – Test 1b: Examination of dimension and mass*

IEC 60512-2-1, *Connectors for electronic equipment – Tests and measurements – Part 2-1: Electrical continuity and contact resistance tests – Test 2a: Contact resistance – Millivolt level method*

IEC 60512-2-2, *Connectors for electronic equipment – Tests and measurements – Part 2-2: Electrical continuity and contact resistance tests – Test 2b: Contact resistance – Specified test current method*

IEC 60512-2-5, *Connectors for electronic equipment – Tests and measurements – Part 2-5: Electrical continuity and contact resistance tests – Test 2e: Contact disturbance*

IEC 60512-2-6, *Connectors for electronic equipment – Tests and measurements – Part 2-6: Electrical continuity and contact resistance tests – Test 2f: Housing (shell) electrical continuity*

IEC 60512-3-1, *Connectors for electronic equipment – Tests and measurements – Part 3-1: Insulation tests – Test 3a: Insulation resistance*

IEC 60512-4-1, *Connectors for electronic equipment – Tests and measurements – Part 4-1: Voltage stress tests – Test 4a: Voltage proof*

IEC 60512-5-1, *Connectors for electronic equipment – Tests and measurements – Part 5-1: Current-carrying capacity tests – Test 5a: Temperature rise*

IEC 60512-5-2, *Connectors for electronic equipment – Tests and measurements – Part 5-2: Current-carrying capacity tests – Test 5b: Current-temperature derating*

IEC 60512-6-3, *Connectors for electronic equipment – Tests and measurements – Part 6-3: Dynamic stress tests – Test 6c: Shock*

IEC 60512-6-4, *Connectors for electronic equipment – Tests and measurements – Part 6-4: Dynamic stress tests – Test 6d: Vibration (sinusoidal)*

IEC 60512-7-1, *Connectors for electronic equipment – Tests and measurements – Part 7-1: Impact tests (free connectors) – Test 7a: Free fall (repeated)*

IEC 60512-9-1, *Connectors for electronic equipment – Tests and measurements – Part 9-1: Endurance tests – Test 9a: Mechanical operation*

IEC 60512-9-2, *Connectors for electronic equipment – Tests and measurements – Part 9-2: Endurance tests – Test 9b: Electrical load and temperature*

IEC 60512-11-1, *Connectors for electrical and electronic equipment – Tests and measurements – Part 11-1: Climatic tests – Test 11a – Climatic sequence*

IEC 60512-11-3, *Connectors for electronic equipment – Tests and measurements – Part 11-3: Climatic tests – Test 11c: Damp heat, steady state*

IEC 60512-11-4, *Connectors for electronic equipment – Tests and measurements – Part 11-4: Climatic tests – Test 11d: Rapid change of temperature*

Documents
Document Sharing Hub

Full document details: IEC 61076-8-100-2020

IEC 60512-11-6, *Connectors for electronic equipment – Tests and measurements – Part 11-6: Climatic tests – Test 11f: Corrosion, salt mist*

IEC 60512-11-9, *Connectors for electronic equipment – Tests and measurements – Part 11-9: Climatic tests – Test 11i: Dry heat*

IEC 60512-11-10, *Connectors for electronic equipment – Tests and measurements – Part 11-10: Climatic tests – Test 11j: Cold*

IEC 60512-11-11, *Connectors for electronic equipment – Tests and measurements – Part 11-11: Climatic tests – Test 11k: Low air pressure*

IEC 60512-11-12, *Connectors for electronic equipment – Tests and measurements – Part 11-12: Climatic tests – Test 11m: Damp heat, cyclic*

IEC 60512-13-1, *Connectors for electronic equipment – Tests and measurements – Part 13-1: Mechanical operation tests – Test 13a: Engaging and separating forces*

IEC 60512-13-5, *Connectors for electronic equipment – Tests and measurements – Part 13-5: Mechanical operation tests – Test 13e: Polarizing and keying method*

IEC 60512-15-1, *Connectors for electronic equipment – Tests and measurements – Part 15-1: Connector tests (mechanical) – Test 15a: Contact retention in insert*

IEC 60512-15-6, *Connectors for electronic equipment – Tests and measurements – Part 15-6: Connector tests (mechanical) – Test 15f: Effectiveness of connector coupling devices*

IEC 60512-16-5, *Connectors for electronic equipment – Tests and measurements – Part 16-5: Mechanical tests on contacts and terminations – Test 16e: Gauge retention force (resilient contacts)*

IEC 60529:1989, *Degrees of protection provided by enclosures (IP code)*

IEC 60695-2-11:2014, *Fire hazard testing – Part 2-11: Glowing/hot-wire based test methods – Glow-wire flammability test method for end-products (GWEPT)*

IEC 60999-1, *Connecting devices – Electrical copper conductors – Safety requirements for screw-type and screwless-type clamping units – Part 1: General requirements and particular requirements for clamping units for conductors from 0,2 mm^2 up to 35 mm^2 (included)*

IEC 60999-2, *Connecting devices – Electrical copper conductors – Safety requirements for screw-type and screwless-type clamping units – Part 2: Particular requirements for clamping units for conductors above 35 mm^2 up to 300 mm^2 (included)*

IEC 61076-1:2006, *Connectors for electronic equipment – Product requirements – Part 1: Generic specification*

IEC 61984:2008, *Connectors – Safety requirements and tests*

IEC 62430:2019, *Environmentally conscious design (ECD) – Principles, requirements and guidance*

IEC Guide 109, *Environmental aspects – Inclusion in electrotechnical product standards*

ISO 1302:2002, *Geometrical Product Specifications (GPS) – Indication of surface texture in technical product documentation*

AVA Documents
Document Sharing Hub

Full document details: IEC 61076-8-100-2020

ISO 6508-1:2015, *Metallic materials – Rockwell hardness test – Part 1: Test method*

ISO 11469:2016, *Plastics – Generic identification and marking of plastic products*

3 Terms and definitions

For the purposes of this document, the terms and definitions given in IEC 60050-581 apply.

ISO and IEC maintain terminological databases for use in standardization at the following addresses:

- IEC Electropedia: available at http://www.electropedia.org/
- ISO Online browsing platform: available at http://www.iso.org/obp

4 Technical information

4.1 Recommended method of termination

4.1.1 General

Terminations shall be crimped connections in accordance with IEC 60352.

4.1.2 Number of contacts and contact cavities

Number of contacts: 2-pole 20 A connector: power contacts: 2, signal contacts: 2.

3-pole 20 A connector: power contacts: 3, signal contacts: 2.

Number of contact cavities： 2-pole 20 A connector: 4, 3-pole 20 A connector: 5.

Suitable wire: cross-sectional area for power contacts: 2,5 mm^2, cross-sectional area for signal contacts: 0,5 mm^2.

4.2 Ratings and characteristics

Connectors according to this specification are connectors without breaking capacity (COC) according to IEC 61984, therefore they are not intended to be engaged or disengaged in normal use when live or under load, if not otherwise specified by the manufacturer.

Rated voltage: power contacts:750 V a.c. (1 000 V d.c.), signal contacts: 48 V d.c.

Voltage proof of power contacts:4 kV, voltage proof of signal contacts: 1 kV.

Pollution degree: 2

Rated current: power contacts:20 A, signal contacts: 3 A.

Insulation resistance:5 000 MΩ min.

Climatic categories : 55/125/10.

4.3 Systems of levels

4.3.1 Performance levels

Performance level for these connectors is 1.

Documents
Document Sharing Hub

Full document details: IEC 61076-8-100-2020

4.3.2 Compatibility levels

The compatibility levels of the products specified by this document shall comply with 2.2.3.3 of IEC 61076-1:2006.

4.4 Classification into climatic categories

Conditions: according to IEC 60068-1 and Table 1.

Table 1 – Climatic categories

Climatic categories	Lower temperature °C	Upper temperature °C	Steady state damp-heat d
55/125/10	-55	+125	10

4.5 Clearance and creepage distance

Clearance and creepage distances shall be measured according to IEC 60512-1-2 with the following additional requirements.

For these connectors clearance and creepage distances shall be measured only in mated condition (connector without breaking capacity as defined in IEC 61984).

Power contacts: clearance 12 mm min. creepage distance 12 mm min.

Signal contacts: clearance 2 mm min. creepage distance 2 mm min.

Between any power contact and the most adjacent signal contact: clearance 12 mm min. creepage distance 12 mm min.

4.6 Current-carrying capacity

The current-carrying capacity shall be measured according to IEC 60512-5-2, Test 5b and stated by the manufacturer.

4.7 Marking

The marking of the connector and the package shall be in accordance with 2.7 of IEC 61076-1:2006.

5 Dimensional information

5.1 General

Dimensions are given in millimetres. Drawings are shown in the first angle projection. The shape of the connectors may deviate from those given in the following drawings as long as the specified dimensions are not influenced.

For safety aspects IEC 61984 shall be considered unless otherwise specified.

Missing dimensions shall be chosen according to the common characteristics and intended use.

5.2 Isometric view and common features

Figure 1 and Figure 2 are isometric views of free and fixed connectors.

Documents
Document Sharing Hub

Full document details: IEC 61076-8-100-2020

5.2.1 Isometric view of free connectors

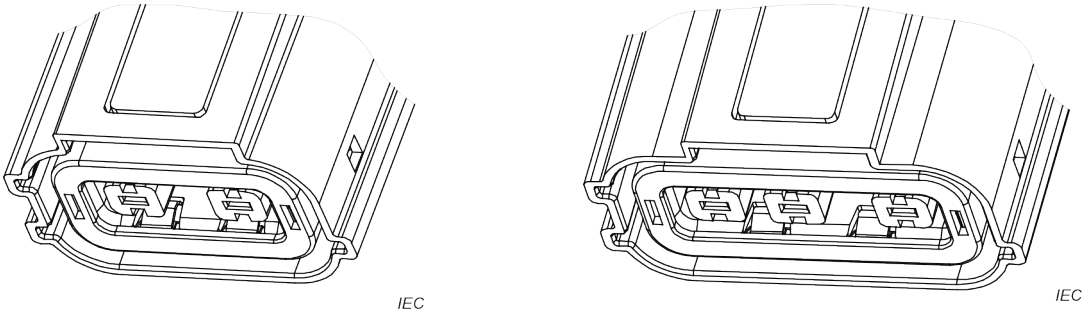

Figure 1 – 2-pole and 3-pole free connectors

5.2.2 Isometric view of fixed connectors

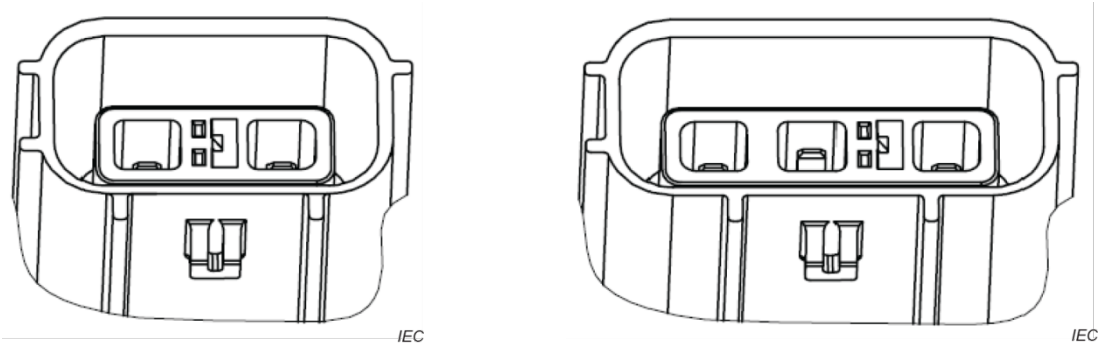

Figure 2 – 2-pole and 3-pole fixed connectors

5.3 Engagement (mating) information

5.3.1 General

5.3.1.1 Engagement (mating) direction

Not applicable.

5.3.1.2 Contact levels and sequencing

Power contacts shall be engaged prior to signal contacts in the mating process of connectors. Power contacts shall be withdrawn posterior to signal contacts in the separating process of connectors. In other words, signal contacts shall be of the FBLM (first break last make) type.

5.3.2 Perpendicular to the engaging (mating) direction

Not applicable.

5.3.3 Inclination

Not applicable.

5.4 Fixed connectors

5.4.1 General

Figure 3 and Figure 4 and Table 2 and Table 3 describe dimensions for fixed style connectors.

Documents
Document Sharing Hub
Full document details: IEC 61076-8-100-2020

5.4.2 Dimensions

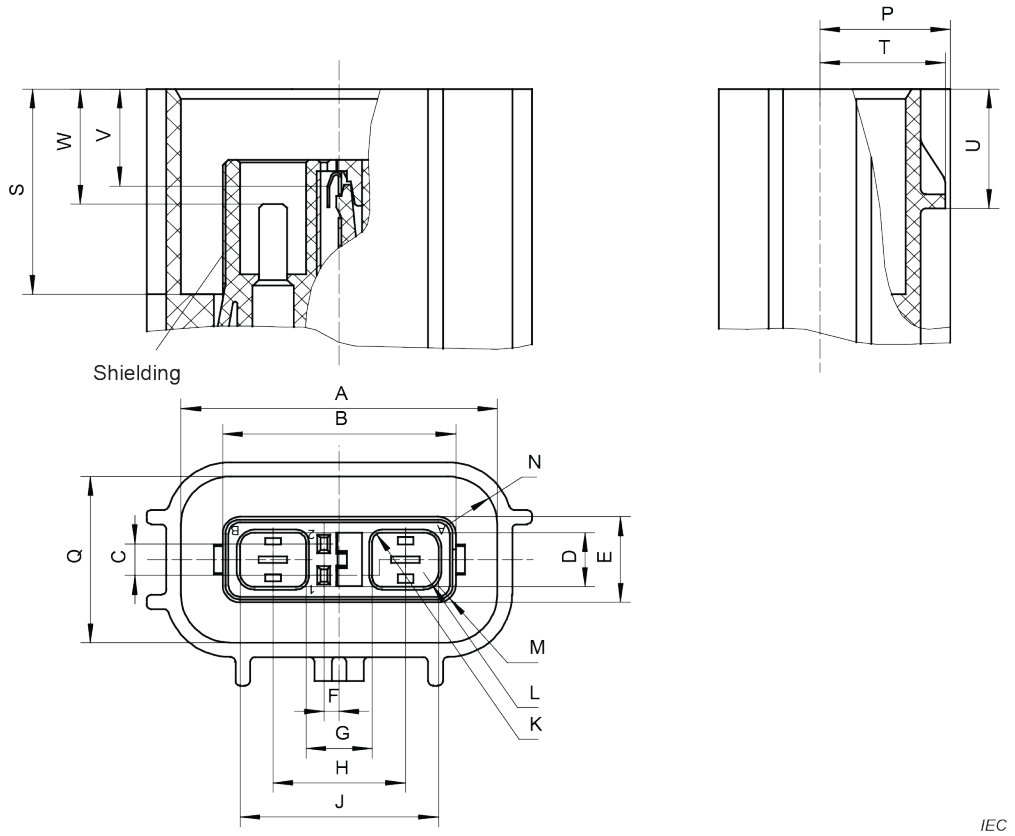

Figure 3 – 2-pole 20 A fixed connector

Table 2 – 2-pole 20 A fixed connector dimensions

dimensions in mm

Letter	Minimum	Nominal	Maximum
A	31,8	32	32
B	23,45	23,6	23,6
C	3,25	3,3	3,35
D	5,7	5,7	5,8
E	8,9	9	9
F	1,45	1,5	1,55
G	6,6	6,7	6,7
H	13,35	13,4	13,45
J	20,1	20,1	20,2
K	R0,6	R0,8	R0,8
L	R1,4	R1,5	R1,5
M	R1,8	R1,8	R1,9
N	R5	R5	R5,1
P	13,1	13,2	13,2
Q	17,25	17,4	17,4
S	21,5	21,5	21,6
T	12,7	12,7	12,8
U	12,45	12,5	12,55

AVA Documents
Document Sharing Hub

Letter	Minimum	Nominal	Maximum
V	10	10,2	10,2
W	11,8	12	12

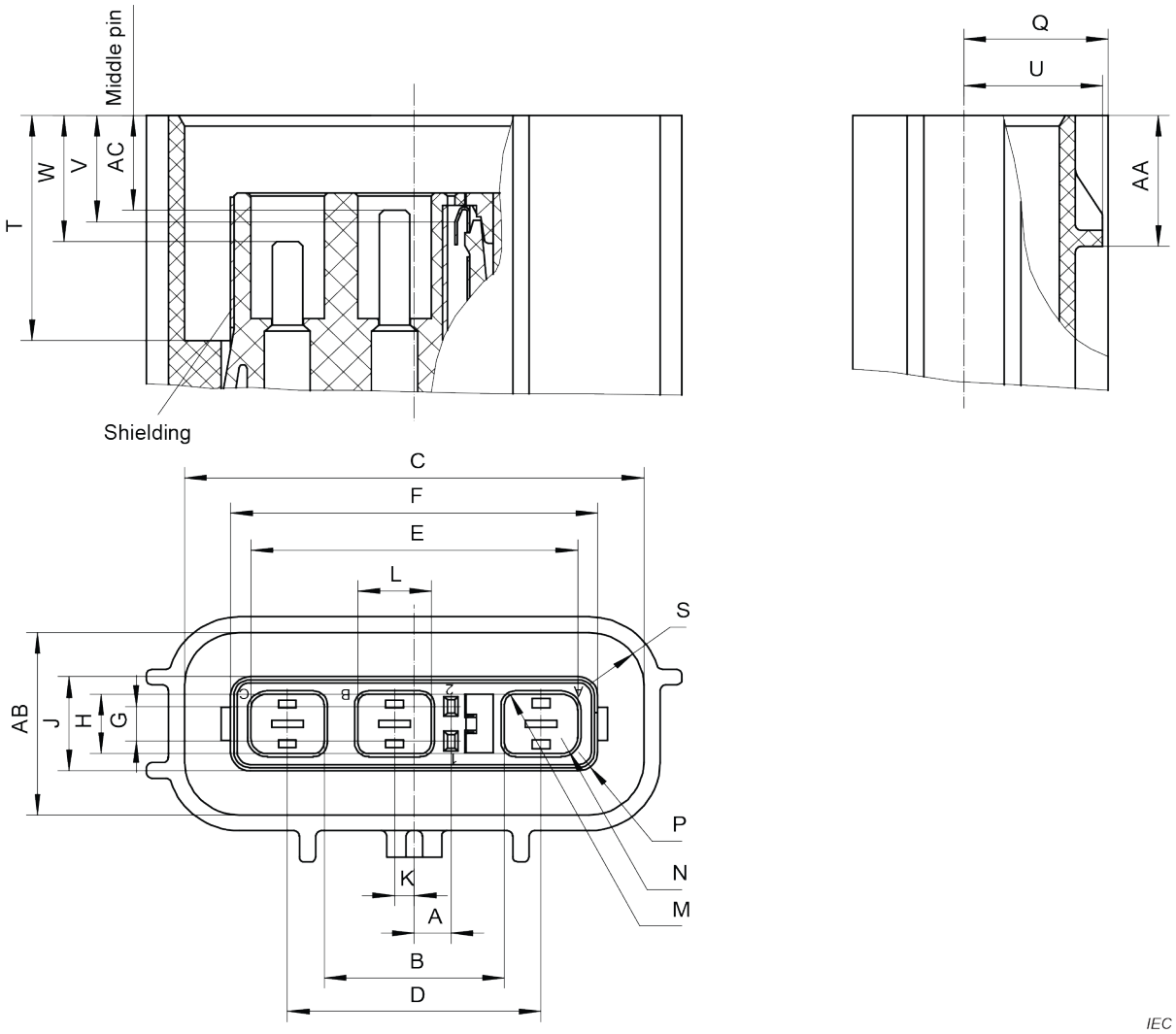

Figure 4 – 3-pole 20 A fixed connector

Table 3 – 3-pole 20 A fixed connector dimensions

dimensions in mm

Letter	Minimum	Nominal	Maximum
A	3,3	3,35	3,4
B	16,4	16,5	16,5
C	41,8	42	42
D	23,15	23,2	23,25
E	29,9	29,9	30
F	33,5	33,6	33,6
G	3,25	3,3	3,35
H	5,7	5,7	5,8
J	8,9	9	9

AVA Documents
Document Sharing Hub
Full document details: IEC 61076-8-100-2020

Letter	Minimum	Nominal	Maximum
K	1,5	1,5	1,6
L	6,75	6,8	6,85
M	R0,9	R1	R1
N	R1,4	R1,5	R1,5
P	R1,8	R1,8	R1,9
Q	13,1	13,2	13,2
S	R5	R5	R5,1
T	21,5	21,5	21,6
U	12,7	12,7	12,8
V	10	10,2	10,2
W	11,8	12	12
AA	12,45	12,5	12,5
AB	17,25	17,4	17,4
AC	9,8	9	9

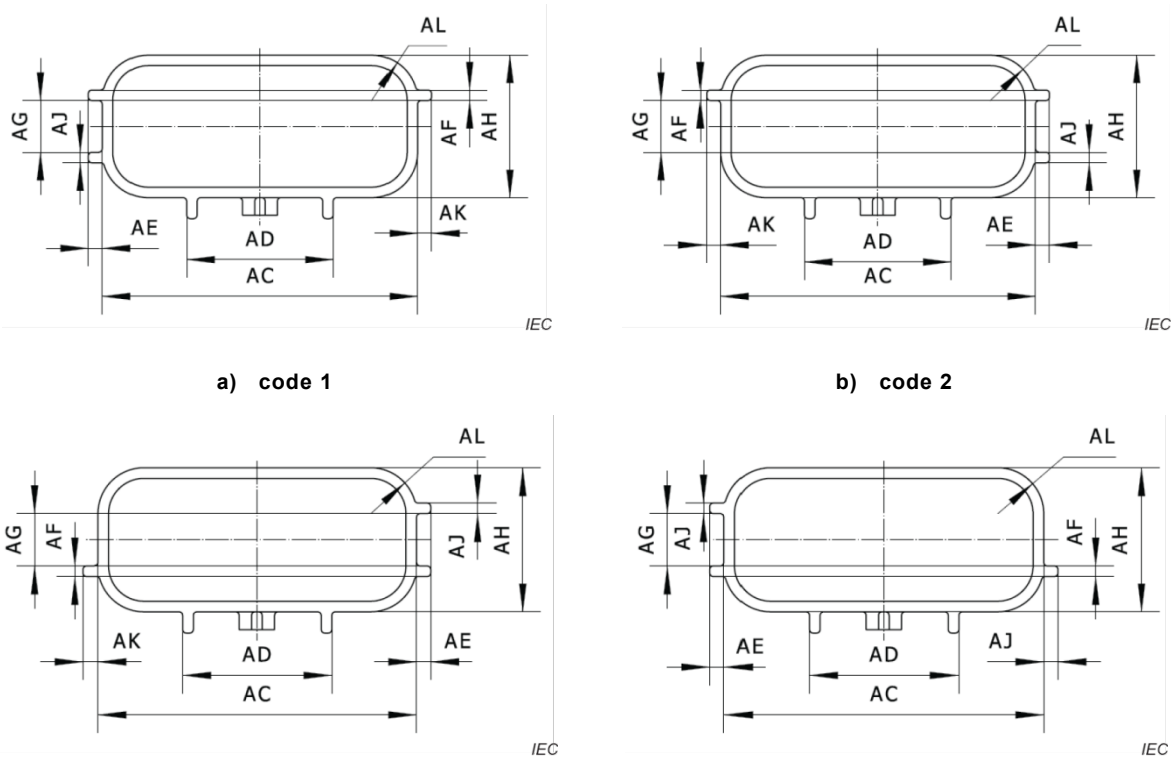

a) code 1

b) code 2

c) code 3

d) code 4

Figure 5 – Fixed connector codings

The fixed connector housing may have four different combinations of coding keys in its contour, as shown in Figure 5 and dimensions in Table 4, using three integral coding keys on the short sides of the housing that, in combination with the corresponding three keyways in the contour of the mating free connector hood, act as coding device, i.e. prevent the mating or the engagement of two connectors of the same family which should not mate in an application.

Documents
Document Sharing Hub
Full document details: IEC 61076-8-100-2020

Table 4 – Fixed connector codings dimensions

dimensions in mm

Letter	2-pole fixed connector			3-pole fixed connector		
	Minimum	Nominal	Maximum	Minimum	Nominal	Maximum
AC	34,8	35	35,1	44,8	45	45,1
AD	20,9	21	21,1	20,9	21	21,1
AE	2	2	2,1	2	2	2,1
AF	1,4	1,5	1,5	1,4	1,5	1,5
AG	7,4	7,4	7,5	7,4	7,4	7,5
AH	20,3	20,4	20,5	20,3	20,4	20,5
AJ	1,4	1,5	1,5	1,4	1,5	1,5
AK	2	2	2,1	2	2	2,1
AL	R6,4	R6,5	R6,6	R6,4	R6,5	R6,6

5.4.3 Terminations

Terminations according to IEC 60352.

5.5 Free connectors

5.5.1 General

Figure 6 and Figure 7and Table 5 and Table 6 describe dimensions for fixed style connectors.

Documents
Document Sharing Hub

Full document details: IEC 61076-8-100-2020

5.5.2 Dimensions

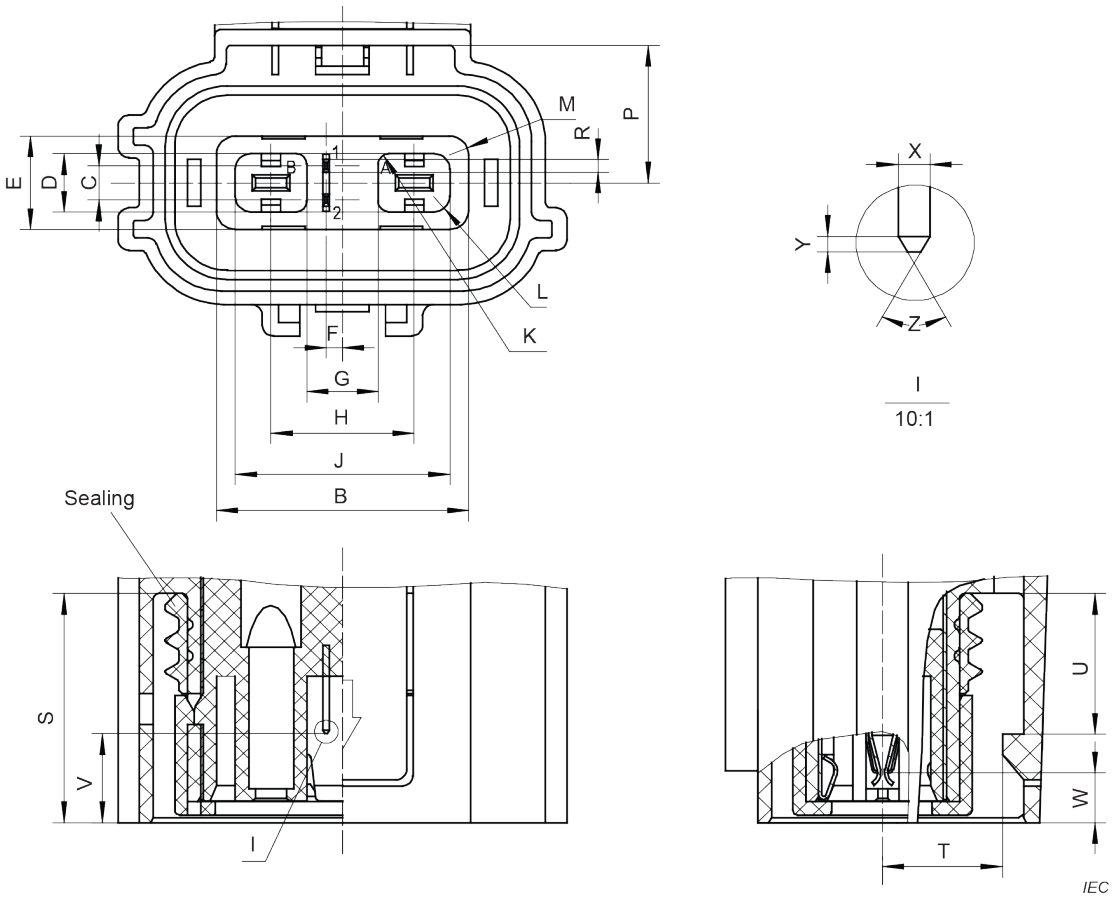

Figure 6 – 2-pole 20 A free connector

Table 5 – 2-pole 20 A free connector dimensions

dimensions in mm

Letter	Minimum	Nominal	Maximum
B	23,65	23,7	23,75
C	3,25	3,3	3,35
D	5,5	5,6	5,6
E	9,2	9,2	9,3
F	1,45	1,5	1,55
G	6,75	6,8	6,85
H	13,35	13,4	13,45
J	20	20,1	20,1
K	R1	R1	R1,1
L	R1,5	R1,5	R1,6
M	R1,9	R1,9	R2
P	13,3	13,3	13,4
R	1,05	1,1	1,15
S	21,9	22	22
T	11,2	11,2	11,3
U	13,5	13,5	13,6

AVA Documents
Document Sharing Hub
Full document details: IEC 61076-8-100-2020

Letter	Minimum	Nominal	Maximum
V	8,55	8,6	8,65
W	4,7	4,8	4,8
X	0,62	0,64	0,67
Y	0,2	0,3	0,4
Z	55°	60°	65°

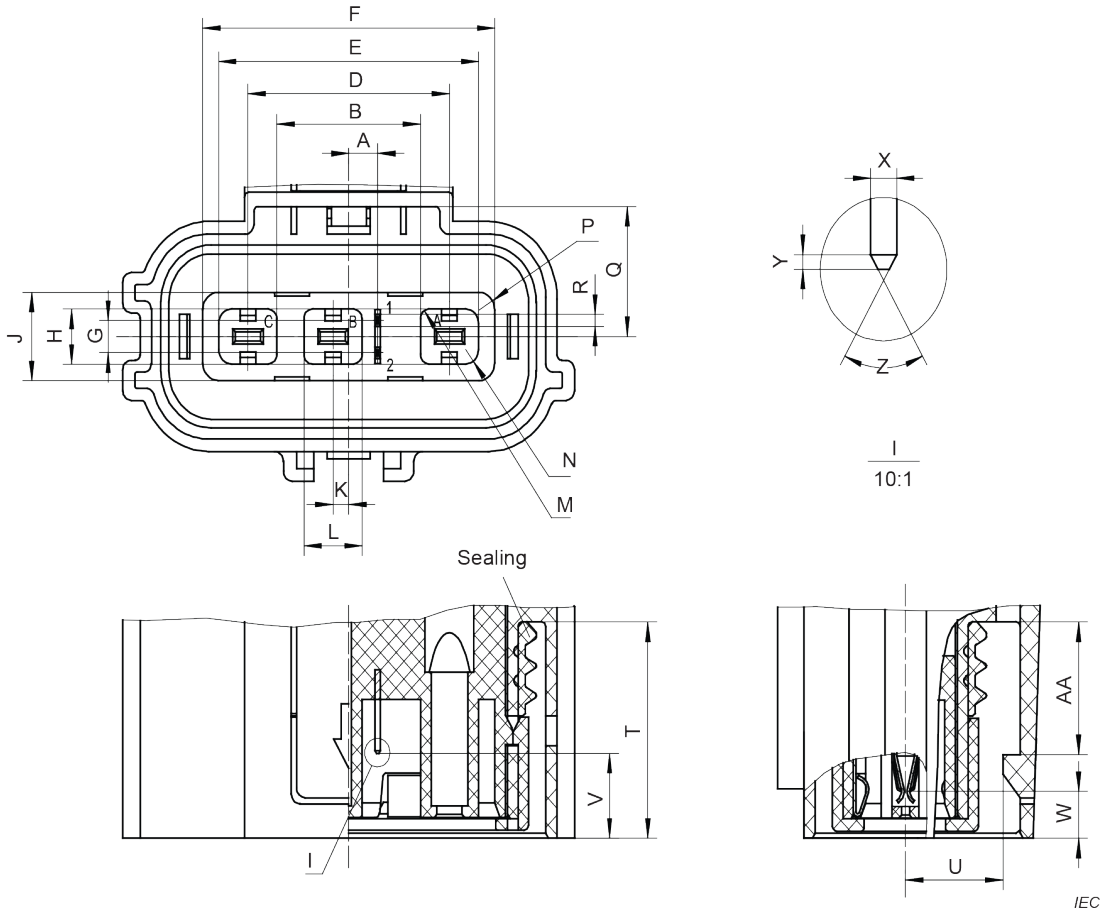

Figure 7 – 3-pole 20 A free connector

Table 6 – 3-pole 20 A free connector dimensions

dimensions in mm

Letter	Minimum	Nominal	Maximum
A	3,5	3,55	3,6
B	16,55	16,6	16,7
D	23,15	23,2	23,25
E	29,7	29,8	29,8
F	33,8	33,8	33,95
G	3,25	3,3	3,35
H	5,5	5,6	5,6
J	9,2	9,2	9,3
K	1,75	1,8	1,85

AVA Documents
Document Sharing Hub
Full document details: IEC 61076-8-100-2020

Letter	Minimum	Nominal	Maximum
L	6,25	6,3	6,35
M	R1	R1	R1,1
N	R1,5	R1,5	R1,6
P	R1,9	R1,9	R2
Q	13,3	13,3	13,4
R	1,05	1,1	1,15
T	21,9	22	22
U	11,2	11,2	11,3
V	8,55	8,6	8,65
W	4,7	4,8	4,8
X	0,62	0,64	0,67
Y	0,2	0,3	0,4
AA	13,5	13,5	13,6
Z	55°	60°	65°

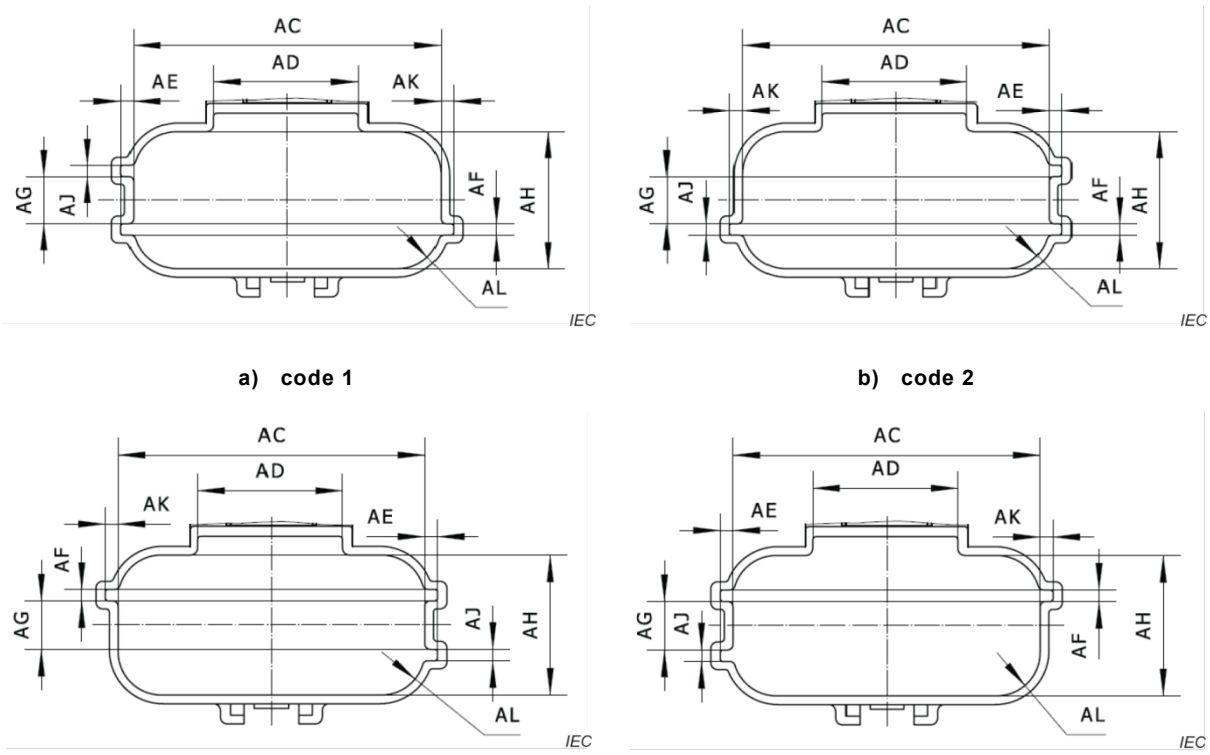

a) code 1

b) code 2

c) code 3

d) code 4

Figure 8 – Free connector codings

The free connector hood may have four different combinations of coding keyways in its contour, as shown in Figure 8 and Table 7, using three integral coding keyways on the short sides of the housing that, in combination with the corresponding three keys in the contour of the mating fixed connector housing, act as coding device, i.e. prevent the mating or the engagement of two connectors of the same family which should not mate in an application.

Documents
Document Sharing Hub
Full document details: IEC 61076-8-100-2020

Table 7 – Free connector codings dimensions

dimensions in mm

Letter	2-pole free connector			3-pole free connector		
	Minimum	Nominal	Maximum	Minimum	Nominal	Maximum
AC	35,3	35,4	35,6	45,3	45,4	45,6
AD	21,3	21,4	21,5	21,3	21,4	21,5
AE	1,8	1,9	1,9	1,8	1,9	1,9
AF	1,7	1,7	1,8	1,7	1,7	1,8
AG	7,1	7,2	7,2	7,1	7,2	7,2
AH	20,7	20,8	20,9	20,7	20,8	20,9
AJ	1,7	1,7	1,8	1,7	1,7	1,8
AK	1,8	1,9	1,9	1,8	1,9	1,9
AL	R6,2	R6,4	R6,4	R6,2	R6,4	R6,4

5.5.3 Terminations

Terminations according to IEC 60352.

5.6 Accessories

Not applicable.

5.7 Mounting information for connectors

Mounting information could be specified upon agreement between manufacturer and customer.

5.8 Gauges: Sizing gauges and retention force gauges

Material: tool steel, with hardness of 60 to 64 HRC according to ISO 6508-1:2015 and surface roughness of 0,2 µm according to ISO 1302:2002. See Figure 9, Figure 10 and Table 8.

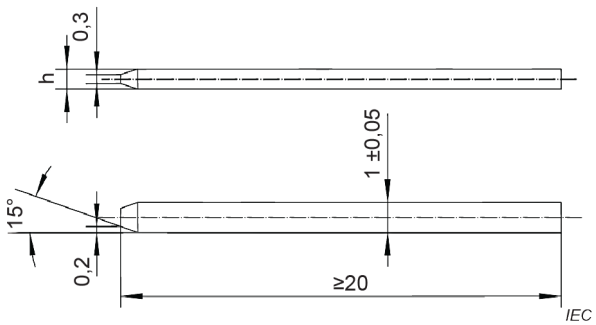

Figure 9 – Gauge for signal contact

Documents
Document Sharing Hub
Full document details: IEC 61076-8-100-2020

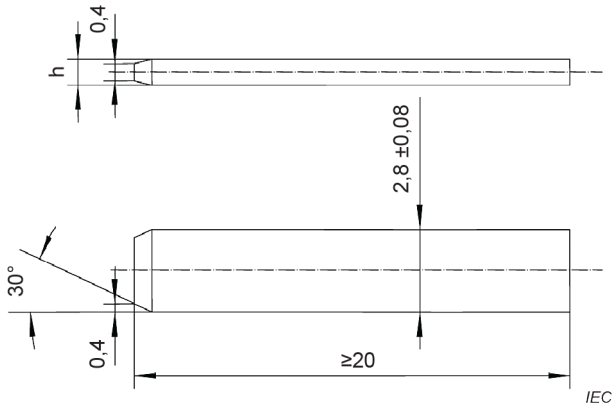

Figure 10 – Gauge for power contact

Table 8 – Gauge dimensions

Gauge	Contact category	Mass g	Application	h mm
P11	Signal contact	-	Sizing	$0{,}67\ ^{+0{,}005}_{0}$
P12		150	Retention force	$0{,}62\ ^{0}_{-0{,}005}$
P21	Power contact	-	Sizing	$0{,}84\ ^{+0{,}005}_{0}$
P22		300	Retention force	$0{,}77\ ^{0}_{-0{,}005}$

6 Technical characteristics

6.1 Classification into climatic categories

See 4.4.

6.2 Electrical characteristics

6.2.1 Clearance and creepage distance

See 4.5.

6.2.2 Voltage proof

Conditions: IEC 60512-4-1, Test 4a, method A.

Standard atmospheric conditions, half of the connectors are mated and half unmated. Test voltage according to Table 9.

Requirements: There shall be no breakdown or flashover.

Documents
Document Sharing Hub
Full document details: IEC 61076-8-100-2020

Table 9 – Voltage proof

No.	Measuring points	Test voltage (50 Hz) V a.c. r.m.s.	Test time min
1	Between signal contacts, between signal contact and metal shielding	1 000	1
2	Between power contacts, between power contact and metal shielding, power contact and signal contact	4 000	

6.2.3 Contact resistance

6.2.3.1 Initial contact resistance

Conditions: IEC 60512-2-1, Test 2a.

Standard atmospheric conditions.

Requirement: power contact: 3 mΩ max. signal contact: 5 mΩ max.

6.2.3.2 Contact resistance after test

Conditions: IEC 60512-2-1, Test 2a.

Standard atmospheric conditions.

Requirements: power contact: 6 mΩ max. signal contact: 10 mΩ max.

6.2.4 Housing (shell) electrical continuity

Conditions: IEC 60512-2-6, Test 2f.

Standard atmospheric conditions, mated connectors. Resistance shall be measured per Test 2b of IEC 60512-2-2.

Requirements: resistance: 50 mΩ max.

6.2.5 Insulation resistance

6.2.5.1 Initial insulation resistance

Conditions: IEC 60512-3-1, Test 3a, method A.

Standard atmospheric conditions, half of the connectors are mated and half unmated.

Test voltage: 500 V d.c. ± 50 V d.c.

Requirements: Contact/contact/shielding: 5 000 MΩ min.

6.2.5.2 Insulation resistance after test

Conditions: IEC 60512-3-1, Test 3a, method A.

Standard atmospheric conditions, half of the connectors are mated and half unmated.

Test voltage: 500 V d.c. ± 50 V d.c.

Documents
Document Sharing Hub

Full document details: IEC 61076-8-100-2020

Requirements: Contact/contact/shielding: 200 MΩ min.

6.2.6 Temperature rise

Conditions: IEC 60512-5-1, Test 5a

Standard atmospheric conditions, mated connectors, contacts are connected with IEC 60228 class 5 stranded copper wires, wire cross-sectional area in accordance with 4.1.2, test for power contacts only.

Test current: 20 A.

Requirements: value of temperature rise: 40 K max., the appearance of the connectors shall meet the requirements of test phase P1.

6.2.7 Electrical load and temperature

Conditions: IEC 60512-9-2, Test 9b.

Standard atmospheric conditions, mated connectors, contacts are connected with IEC 60228 class 5 stranded copper wires, wire cross-sectional area in accordance with 4.1.2, test for power contacts only.

Test current: 20 A, temperature: 85 °C ± 2 °C, duration: 500 h.

Requirements: the appearance, contact resistance (6.2.3.2), housing electrical continuity (6.2.4), insulation resistance (6.2.5.2), voltage proof (6.2.2), engaging and separating force (6.3.4) and IP degree of protection (6.4.4), shall meet the requirements of this specification after test.

6.3 Mechanical characteristics

6.3.1 Mechanical operation

Conditions: IEC 60512-9-1, Test 9a.

Standard atmospheric conditions, mated connectors.

Rate of insertion and withdrawal: 10 mm/s max.

Operating cycles: 500 cycles.

Requirements: the appearance, contact resistance (6.2.3.2), housing electrical continuity (6.2.4), insulation resistance (6.2.5.2), voltage proof (6.2.2), polarization and keying method (6.3.6) and IP degree of protection (6.4.4) shall meet the requirements of this specification after test.

6.3.2 Effectiveness of connector coupling devices

Conditions: IEC 60512-15-6, Test 15f.

Standard atmospheric conditions, mated connectors.

Axial force : 150 N.

Requirements: 1 µs max. of duration of disturbance during the test. The connectors shall remain fully engaged; the appearance of the connectors shall meet the requirements of test phase P1.

Documents
Document Sharing Hub

Full document details: IEC 61076-8-100-2020