IEC 61076-8-108

Edition 1.0 2023-05

INTERNATIONAL STANDARD

NORME INTERNATIONALE

Connectors for electrical and electronic equipment – Product requirements – Part 8-108: Power connectors – Detail specification for 2P 250 A, 1 000 V plus 2P 5 A 50 V rectangular housing shielded connectors with IP65/IP68 degree of protection when mated and locked, and IPXXB when unmated

Connecteurs pour équipements électriques et électroniques – Exigences de produit – Partie 8-108: Connecteurs d'alimentation – Spécification particulière pour les connecteurs blindés rectangulaires à 2 pôles de 250 A et 1 000 V plus 2 pôles de 5 A et 50 V, avec un degré de protection IP65/IP68 lorsqu'ils sont accouplés et verrouillés, et IPXXB lorsqu'ils sont désaccouplés, logés dans un boîtier

IEC 61076-8-108:2023-05(en-fr)

Documents
Document Sharing Hub
Full document details: IEC 61076-8-108-2023

THIS PUBLICATION IS COPYRIGHT PROTECTED
Copyright © 2023 IEC, Geneva, Switzerland

All rights reserved. Unless otherwise specified, no part of this publication may be reproduced or utilized in any form or by any means, electronic or mechanical, including photocopying and microfilm, without permission in writing from either IEC or IEC's member National Committee in the country of the requester. If you have any questions about IEC copyright or have an enquiry about obtaining additional rights to this publication, please contact the address below or your local IEC member National Committee for further information.

Droits de reproduction réservés. Sauf indication contraire, aucune partie de cette publication ne peut être reproduite ni utilisée sous quelque forme que ce soit et par aucun procédé, électronique ou mécanique, y compris la photocopie et les microfilms, sans l'accord écrit de l'IEC ou du Comité national de l'IEC du pays du demandeur. Si vous avez des questions sur le copyright de l'IEC ou si vous désirez obtenir des droits supplémentaires sur cette publication, utilisez les coordonnées ci-après ou contactez le Comité national de l'IEC de votre pays de résidence.

IEC Secretariat
3, rue de Varembé
CH-1211 Geneva 20
Switzerland

Tel.: +41 22 919 02 11
info@iec.ch
www.iec.ch

About the IEC
The International Electrotechnical Commission (IEC) is the leading global organization that prepares and publishes International Standards for all electrical, electronic and related technologies.

About IEC publications
The technical content of IEC publications is kept under constant review by the IEC. Please make sure that you have the latest edition, a corrigendum or an amendment might have been published.

IEC publications search - webstore.iec.ch/advsearchform
The advanced search enables to find IEC publications by a variety of criteria (reference number, text, technical committee, …). It also gives information on projects, replaced and withdrawn publications.

IEC Just Published - webstore.iec.ch/justpublished
Stay up to date on all new IEC publications. Just Published details all new publications released. Available online and once a month by email.

IEC Customer Service Centre - webstore.iec.ch/csc
If you wish to give us your feedback on this publication or need further assistance, please contact the Customer Service Centre: sales@iec.ch.

IEC Products & Services Portal - products.iec.ch
Discover our powerful search engine and read freely all the publications previews. With a subscription you will always have access to up to date content tailored to your needs.

Electropedia - www.electropedia.org
The world's leading online dictionary on electrotechnology, containing more than 22 300 terminological entries in English and French, with equivalent terms in 19 additional languages. Also known as the International Electrotechnical Vocabulary (IEV) online.

A propos de l'IEC
La Commission Electrotechnique Internationale (IEC) est la première organisation mondiale qui élabore et publie des Normes internationales pour tout ce qui a trait à l'électricité, à l'électronique et aux technologies apparentées.

A propos des publications IEC
Le contenu technique des publications IEC est constamment revu. Veuillez vous assurer que vous possédez l'édition la plus récente, un corrigendum ou amendement peut avoir été publié.

Recherche de publications IEC - webstore.iec.ch/advsearchform
La recherche avancée permet de trouver des publications IEC en utilisant différents critères (numéro de référence, texte, comité d'études, …). Elle donne aussi des informations sur les projets et les publications remplacées ou retirées.

IEC Just Published - webstore.iec.ch/justpublished
Restez informé sur les nouvelles publications IEC. Just Published détaille les nouvelles publications parues. Disponible en ligne et une fois par mois par email.

Service Clients - webstore.iec.ch/csc
Si vous désirez nous donner des commentaires sur cette publication ou si vous avez des questions contactez-nous: sales@iec.ch.

IEC Products & Services Portal - products.iec.ch
Découvrez notre puissant moteur de recherche et consultez gratuitement tous les aperçus des publications. Avec un abonnement, vous aurez toujours accès à un contenu à jour adapté à vos besoins.

Electropedia - www.electropedia.org
Le premier dictionnaire d'électrotechnologie en ligne au monde, avec plus de 22 300 articles terminologiques en anglais et en français, ainsi que les termes équivalents dans 19 langues additionnelles. Egalement appelé Vocabulaire Electrotechnique International (IEV) en ligne.

AVA Documents
Document Sharing Hub

Full document details: IEC 61076-8-108-2023

IEC 61076-8-108

Edition 1.0 2023-05

INTERNATIONAL STANDARD

NORME INTERNATIONALE

Connectors for electrical and electronic equipment – Product requirements – Part 8-108: Power connectors – Detail specification for 2P 250 A, 1 000 V plus 2P 5 A 50 V rectangular housing shielded connectors with IP65/IP68 degree of protection when mated and locked, and IPXXB when unmated

Connecteurs pour équipements électriques et électroniques – Exigences de produit – Partie 8-108: Connecteurs d'alimentation – Spécification particulière pour les connecteurs blindés rectangulaires à 2 pôles de 250 A et 1 000 V plus 2 pôles de 5 A et 50 V, avec un degré de protection IP65/IP68 lorsqu'ils sont accouplés et verrouillés, et IPXXB lorsqu'ils sont désaccouplés, logés dans un boîtier

INTERNATIONAL
ELECTROTECHNICAL
COMMISSION

COMMISSION
ELECTROTECHNIQUE
INTERNATIONALE

ICS 31.220.10

ISBN 978-2-8322-6944-2

Warning! Make sure that you obtained this publication from an authorized distributor.
Attention! Veuillez vous assurer que vous avez obtenu cette publication via un distributeur agréé.

® Registered trademark of the International Electrotechnical Commission
Marque déposée de la Commission Electrotechnique Internationale

Documents
Document Sharing Hub

Full document details: IEC 61076-8-108-2023

CONTENTS

FOREWORD 5
1 Scope 8
2 Normative references 8
3 Terms and definitions 11
4 Technical information 11
4.1 Recommended method of termination 11
4.1.1 General 11
4.1.2 Number of contacts and contact cavities 11
4.2 Ratings and characteristics 11
4.3 Systems of levels 12
4.3.1 Performance levels 12
4.3.2 Compatibility levels 12
4.4 Classification into climatic categories 12
4.5 Clearance and creepage distance 12
4.6 Current-carrying capacity 12
4.7 Marking 13
5 Dimensional information 13
5.1 General 13
5.2 Isometric view and common features 13
5.2.1 Isometric view of free connectors (Figure 1) 13
5.2.2 Isometric view of fixed connectors (Figure 2) 13
5.3 Engagement (mating) information 13
5.3.1 General 13
5.3.2 Perpendicular to the engaging (mating) direction 14
5.3.3 Inclination 14
5.4 Free connectors 14
5.4.1 Dimensions (Figure 3, Table 2, Figure 4, Table 3, Table 4) 14
5.4.2 Terminations 17
5.5 Fixed connectors 18
5.5.1 Dimensions (Figure 5, Table 5, Figure 6, Table 6, Table 7) 18
5.5.2 Terminations 20
5.6 Accessories 20
5.7 Mounting information 20
5.8 Gauges – Sizing gauges and retention force gauges 20
6 Technical characteristics 21
6.1 Classification into climatic categories 21
6.2 Electrical characteristics 21
6.2.1 Clearance and creepage distance 21
6.2.2 Voltage proof 21
6.2.3 Contact resistance 22
6.2.4 Housing (shell) electrical continuity and shielding effectiveness 22
6.2.5 Insulation resistance 22
6.2.6 Current-carrying capacity 22
6.2.7 Electrical load and temperature 23
6.3 Mechanical characteristics 23
6.3.1 Mechanical operation 23

AVA Documents
Document Sharing Hub
Full document details: IEC 61076-8-108-2023

6.3.2 Effectiveness of connector coupling devices ... 24
6.3.3 Gauge retention force (resilient contact) ... 24
6.3.4 Engaging and separating forces ... 24
6.3.5 Contact retention in insert ... 24
6.3.6 Polarizing and keying method ... 24
6.4 Dynamic stress tests ... 24
6.4.1 Vibration (sine) ... 24
6.4.2 Shock ... 25
6.4.3 Free fall (repeated) ... 25
6.4.4 IP degree of protection ... 25
6.4.5 Glow-wire flammability test method for end-products (GWEPT) ... 25
6.5 Climatic tests ... 26
6.5.1 Damp heat, steady state ... 26
6.5.2 Rapid change of temperature ... 26
6.5.3 Corrosion, salt mist ... 26
6.5.4 Dry heat ... 26
6.5.5 Cold ... 26
6.5.6 Low air pressure ... 26
6.6 Environmental aspects ... 27
6.6.1 Marking of insulation material (plastic) ... 27
6.6.2 Design/use of material ... 27
7 Test schedule ... 27
7.1 General ... 27
7.2 Test schedules ... 27
7.2.1 Basic (minimum) test schedule ... 27
7.2.2 Full test schedule ... 27
7.3 Test procedures and measurement methods ... 37
7.4 Pre-conditioning ... 37
7.5 Wiring and mounting of test specimens ... 37
7.5.1 Wiring ... 37
7.5.2 Mounting ... 37

Figure 1 – Free connector isometric view ... 13
Figure 2 – Fixed connector isometric view ... 13
Figure 3 – Free connector ... 14
Figure 4 – Free connector codings ... 16
Figure 5 – Fixed connector ... 18
Figure 6 – Fixed connector codings ... 19
Figure 7 – Gauge for signal contacts ... 21
Figure 8 – Gauge for power contacts ... 21
Figure 9 – Current-temperature derating (70 mm^2 wire size) ... 23

Table 1 – Climatic category ... 12
Table 2 – Free connector dimensions ... 15
Table 3 – Free connector codings dimensions (codings 1 and 2) ... 16
Table 4 – Free connector codings dimensions (codings 3 and 4) ... 17
Table 5 – Fixed connector dimensions ... 18

AVA Documents
Document Sharing Hub
Full document details: IEC 61076-8-108-2023

Table 6 – Fixed connector codings dimensions (codings 1 and 2) 20
Table 7 – Fixed connector codings dimensions (codings 3 and 4) 20
Table 8 – Gauge dimensions 21
Table 9 – Voltage proof 22
Table 10 – Vibration 25
Table 11 – Number of test specimens 27
Table 12 – Test group P 28
Table 13 – Test group AP 29
Table 14 – Test group BP 30
Table 15 – Test group CP 31
Table 16 – Test group DP 32
Table 17 – Test group EP 33
Table 18 – Test group GP 34
Table 19 – Test group HP 35
Table 20 – Test group JP 35
Table 21 – Test group KP 35

Documents
Document Sharing Hub
Full document details: IEC 61076-8-108-2023

INTERNATIONAL ELECTROTECHNICAL COMMISSION

CONNECTORS FOR ELECTRICAL AND ELECTRONIC EQUIPMENT – PRODUCT REQUIREMENTS –

Part 8-108: Power connectors – Detail specification for 2P 250 A, 1 000 V plus 2P 5 A 50 V rectangular housing shielded connectors with IP65/IP68 degree of protection when mated and locked, and IPXXB when unmated

FOREWORD

1) The International Electrotechnical Commission (IEC) is a worldwide organization for standardization comprising all national electrotechnical committees (IEC National Committees). The object of IEC is to promote international co-operation on all questions concerning standardization in the electrical and electronic fields. To this end and in addition to other activities, IEC publishes International Standards, Technical Specifications, Technical Reports, Publicly Available Specifications (PAS) and Guides (hereafter referred to as "IEC Publication(s)"). Their preparation is entrusted to technical committees; any IEC National Committee interested in the subject dealt with may participate in this preparatory work. International, governmental and non-governmental organizations liaising with the IEC also participate in this preparation. IEC collaborates closely with the International Organization for Standardization (ISO) in accordance with conditions determined by agreement between the two organizations.
2) The formal decisions or agreements of IEC on technical matters express, as nearly as possible, an international consensus of opinion on the relevant subjects since each technical committee has representation from all interested IEC National Committees.
3) IEC Publications have the form of recommendations for international use and are accepted by IEC National Committees in that sense. While all reasonable efforts are made to ensure that the technical content of IEC Publications is accurate, IEC cannot be held responsible for the way in which they are used or for any misinterpretation by any end user.
4) In order to promote international uniformity, IEC National Committees undertake to apply IEC Publications transparently to the maximum extent possible in their national and regional publications. Any divergence between any IEC Publication and the corresponding national or regional publication shall be clearly indicated in the latter.
5) IEC itself does not provide any attestation of conformity. Independent certification bodies provide conformity assessment services and, in some areas, access to IEC marks of conformity. IEC is not responsible for any services carried out by independent certification bodies.
6) All users should ensure that they have the latest edition of this publication.
7) No liability shall attach to IEC or its directors, employees, servants or agents including individual experts and members of its technical committees and IEC National Committees for any personal injury, property damage or other damage of any nature whatsoever, whether direct or indirect, or for costs (including legal fees) and expenses arising out of the publication, use of, or reliance upon, this IEC Publication or any other IEC Publications.
8) Attention is drawn to the Normative references cited in this publication. Use of the referenced publications is indispensable for the correct application of this publication.
9) Attention is drawn to the possibility that some of the elements of this IEC Publication may be the subject of patent rights. IEC shall not be held responsible for identifying any or all such patent rights.

IEC 61076-8-108 has been prepared by subcommittee 48B: Electrical connectors, of IEC technical committee 48: Electrical connectors and mechanical structures for electrical and electronic equipment. It is an International Standard.

The text of this International Standard is based on the following documents:

Draft	Report on voting
48B/2950/CDV	48B/2995/RVC

Full information on the voting for its approval can be found in the report on voting indicated in the above table.

Documents
Document Sharing Hub

The language used for the development of this International Standard is English.

This document was drafted in accordance with ISO/IEC Directives, Part 2, and developed in accordance with ISO/IEC Directives, Part 1 and ISO/IEC Directives, IEC Supplement, available at www.iec.ch/members_experts/refdocs. The main document types developed by IEC are described in greater detail at www.iec.ch/publications.

A list of all parts of IEC 61076 series, under the general title *Connectors for electrical and electronic equipment – Product requirements*, can be found on the IEC website.

Future standards in this series will carry the new general title as cited above. Titles of existing standards in this series will be updated at the time of the next edition.

The committee has decided that the contents of this document will remain unchanged until the stability date indicated on the IEC website under webstore.iec.ch in the data related to the specific document. At this date, the document will be

- reconfirmed,
- withdrawn,
- replaced by a revised edition, or
- amended.

Documents
Document Sharing Hub

Full document details: IEC 61076-8-108-2023

The International Electrotechnical Commission **IEC SC 48B – Electrical connectors**		**IEC 61076-8-108**
Detail specification in accordance with IEC 61076-8		
Free connector	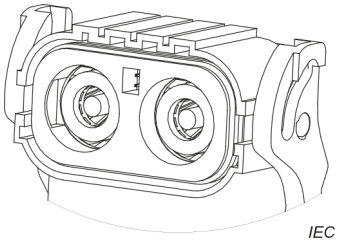 Free connector	For rated current of 250 A DC; 2P power plus 2P signal; Female contacts for power; First break last make male contacts for signal; Straight insertion and withdrawal; 360° shielding; Four codings.
Fixed connector	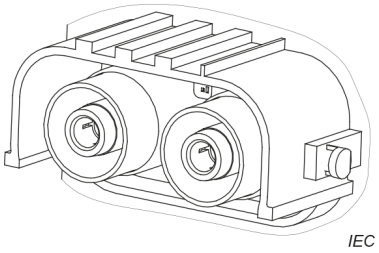 Fixed connector	For rated current of 250 A DC; 2-pole; Male contacts for power; Female contacts for signal; Straight insertion and withdrawal; 360°shielding; Four codings.

Documents
Document Sharing Hub
Full document details: IEC 61076-8-108-2023

CONNECTORS FOR ELECTRICAL AND ELECTRONIC EQUIPMENT – PRODUCT REQUIREMENTS –

Part 8-108: Power connectors – Detail specification for 2P 250 A, 1 000 V plus 2P 5 A 50 V rectangular housing shielded connectors with IP65/IP68 degree of protection when mated and locked, and IPXXB when unmated

1 Scope

This part of IEC 61076-8 describes free and fixed rectangular connectors with:

– 2P power plus 2P signal contacts;
– plastic housing with locking lever and four possible codings;
– 250 A rated current, 1 000 V DC rated voltage on the power section;
– 5 A rated current, 50 V DC rated voltage on the signal section;
– individual shielding around each power contact with relevant shielding termination;
– IP65/IP68 degree of protection when mated and locked, and IPXXB on both plug and receptacle parts when unmated,

hereinafter referred to as a connector, for use in electrical and electronic equipment, including overall dimensions, interface dimensions, technical characteristics, performance requirements and test methods.

Connectors according to this document are intended for use in class II equipment. Hence, they are not equipped with PE contact.

2 Normative references

The following documents are referred to in the text in such a way that some or all of their content constitutes requirements of this document. For dated references, only the edition cited applies. For undated references, the latest edition of the referenced document (including any amendments) applies.

IEC 60050-581:2008, *International Electrotechnical Vocabulary (IEV) – Part 581: Electromechanical components for electronic equipment*

IEC 60068-1, *Environmental testing – Part 1: General and guidance*

IEC 60228:2004, *Conductors of insulated cables*

IEC 60352-1, *Solderless connections – Part 1: Wrapped connections – General requirements, test methods and practical guidance*

IEC 60352-2, *Solderless connections – Part 2: Crimped connections – General requirements, test methods and practical guidance*

IEC 60352-3, *Solderless connections – Part 3: Accessible insulation displacement (ID) connections – General requirements, test methods and practical guidance*

AVA Documents Document Sharing Hub

Full document details: IEC 61076-8-108-2023

IEC 60352-4, *Solderless connections – Part 4: Non-accessible insulation displacement (ID) connections – General requirements, test methods and practical guidance*

IEC 60352-5, *Solderless connections – Part 5: Press-in connections – General requirements, test methods and practical guidance*

IEC 60352-6, *Solderless connections – Part 6: Insulation piercing connections – General requirements, test methods and practical guidance*

IEC 60352-7, *Solderless connections – Part 7: Spring clamp connections – General requirements, test methods and practical guidance*

IEC 60512-1-1, *Connectors for electronic equipment – Tests and measurements – Part 1-1: General examination – Test 1a: Visual examination*

IEC 60512-1-2, *Connectors for electronic equipment – Test and measurements – Part 1-2: General examination – Test 1b: Examination of dimension and mass*

IEC 60512-2-1, *Connectors for electronic equipment – Tests and measurements – Part 2-1: Electrical continuity and contact resistance tests – Test 2a: Contact resistance – Millivolt level method*

IEC 60512-2-2, *Connectors for electronic equipment – Tests and measurements – Part 2-2: Electrical continuity and contact resistance tests – Test 2b: Contact resistance – Specified test current method*

IEC 60512-2-5, *Connectors for electronic equipment – Tests and measurements – Part 2-5: Electrical continuity and contact resistance tests – Test 2e: Contact disturbance*

IEC 60512-2-6, *Connectors for electronic equipment – Tests and measurements – Part 2-6: Electrical continuity and contact resistance tests – Test 2f: Housing (shell) electrical continuity*

IEC 60512-3-1, *Connectors for electronic equipment – Tests and measurements – Part 3-1: Insulation tests – Test 3a: Insulation resistance*

IEC 60512-4-1, *Connectors for electronic equipment – Tests and measurements – Part 4-1: Voltage stress tests – Test 4a: Voltage proof*

IEC 60512-5-2, *Connectors for electronic equipment – Tests and measurements – Part 5-2: Current-carrying capacity tests – Test 5b: Current-temperature derating*

IEC 60512-6-3, *Connectors for electronic equipment – Tests and measurements – Part 6-3: Dynamic stress tests – Test 6c: Shock*

IEC 60512-6-4, *Connectors for electronic equipment – Tests and measurements – Part 6-4: Dynamic stress tests – Test 6d: Vibration (sinusoidal)*

IEC 60512-7-1, *Connectors for electronic equipment – Tests and measurements – Part 7-1: Impact tests (free connectors) – Test 7a: Free fall (repeated)*

IEC 60512-9-1, *Connectors for electronic equipment – Tests and measurements – Part 9-1: Endurance tests – Test 9a: Mechanical operation*

IEC 60512-9-2, *Connectors for electronic equipment – Tests and measurements – Part 9-2: Endurance tests – Test 9b: Electrical load and temperature*

Documents
Document Sharing Hub

Full document details: IEC 61076-8-108-2023

IEC 60512-11-1, *Connectors for electrical and electronic equipment – Tests and measurements – Part 11-1: Climatic tests – Test 11a: Climatic sequence*

IEC 60512-11-3, *Connectors for electronic equipment – Tests and measurements – Part 11-3: Climatic tests – Test 11c: Damp heat, steady state*

IEC 60512-11-4, *Connectors for electronic equipment – Tests and measurements – Part 11-4: Climatic tests – Test 11d: Rapid change of temperature*

IEC 60512-11-6, *Connectors for electronic equipment – Tests and measurements – Part 11-6: Climatic tests – Test 11f: Corrosion, salt mist*

IEC 60512-11-9, *Connectors for electronic equipment – Tests and measurements – Part 11-9: Climatic tests – Test 11i: Dry heat*

IEC 60512-11-10, *Connectors for electronic equipment – Tests and measurements – Part 11-10: Climatic tests – Test 11j: Cold*

IEC 60512-11-11, *Connectors for electronic equipment – Tests and measurements – Part 11-11: Climatic tests – Test 11k: Low air pressure*

IEC 60512-11-12, *Connectors for electronic equipment – Tests and measurements – Part 11-12: Climatic tests – Test 11m: Damp heat, cyclic*

IEC 60512-13-1, *Connectors for electronic equipment – Tests and measurements – Part 13-1: Mechanical operation tests – Test 13a: Engaging and separating forces*

IEC 60512-13-5, *Connectors for electronic equipment – Tests and measurements – Part 13-5: Mechanical operation tests – Test 13e: Polarizing and keying method*

IEC 60512-15-1, *Connectors for electronic equipment – Tests and measurements – Part 15-1: Connector tests (mechanical) – Test 15a: Contact retention in insert*

IEC 60512-15-6, *Connectors for electronic equipment – Tests and measurements – Part 15-6: Connector tests (mechanical) – Test 15f: Effectiveness of connector coupling devices*

IEC 60512-16-5, *Connectors for electronic equipment – Tests and measurements – Part 16-5: Mechanical tests on contacts and terminations – Test 16e: Gauge retention force (resilient contacts)*

IEC 60529:1989, *Degrees of protection provided by enclosures (IP Code)*
IEC 60529:1989/AMD1:1999
IEC 60529:1989/AMD2:2013

IEC 60695-2-11:2021, *Fire hazard testing – Part 2-11: Glowing/hot-wire based test methods – Glow-wire flammability test method for end products (GWEPT)*

IEC 60999-1, *Connecting devices – Electrical copper conductors – Safety requirements for screw-type and screwless-type clamping units – Part 1: General requirements and particular requirements for clamping units for conductors from 0,2 mm^2 up to 35 mm^2 (included)*

IEC 60999-2, *Connecting devices – Electrical copper conductors – Safety requirements for screw-type and screwless-type clamping units – Part 2: Particular requirements for clamping units for conductors above 35 mm^2 up to 300 mm^2 (included)*

Documents
Document Sharing Hub
Full document details: IEC 61076-8-108-2023

IEC 61076-1:2006, *Connectors for electronic equipment – Product requirements – Part 1: Generic specification*
IEC 61076-1:2006/AMD1:2019

IEC 61984:2008, *Connectors – Safety requirements and tests*

IEC 62153-4-6:2017, *Metallic cables and other passive components test methods – Part 4-6: Electromagnetic compatibility (EMC) – Surface transfer impedance – Line injection method*

IEC 62430:2019, *Environmentally conscious design (ECD) – Principles, requirements and guidance*

IEC Guide 109, *Environmental aspects – Inclusion in electrotechnical product standards*

ISO 6508-1:2015, *Metallic materials – Rockwell hardness test – Part 1: Test method*

ISO 11469:2000, *Plastics – Generic identification and marking of plastics products*

ISO 21920-1: 2021, *Geometrical product specifications (GPS) – Surface texture: Profile – Part 1: Indication of surface texture*

3 Terms and definitions

For the purposes of this document, the terms and definitions given in IEC 60050-581 apply.

ISO and IEC maintain terminology databases for use in standardization at the following addresses:

- IEC Electropedia: available at https://www.electropedia.org/
- ISO Online browsing platform: available at https://www.iso.org/obp

4 Technical information

4.1 Recommended method of termination

4.1.1 General

According to IEC 60352 series, IEC 60999-1 or IEC 60999-2.

4.1.2 Number of contacts and contact cavities

Number of contacts: power contacts: 2, shielding contacts: 2 (surrounding each power contact), signal contacts: 2.

Number of contact cavities (for removable contacts): 4.

Suitable wire: cross-sectional area for power contacts: 70 mm^2, cross-sectional area for signal contacts: 0,5 mm^2. The core of each power wire is deemed to be individually shielded, each shielding requiring a dedicated termination.

4.2 Ratings and characteristics

Connectors according this specification are connectors without breaking capacity (COC) according to IEC 61984, therefore they are not intended to be engaged or disengaged in normal use when live or under load.

Documents
Document Sharing Hub

Full document details: IEC 61076-8-108-2023

Rated voltage: power contacts: 1 000 V DC, signal contacts: 50 V DC.

Voltage proof of power contacts: 4 000 V AC, voltage proof of signal contacts: 500 V AC.

Pollution degree: 2.

Rated current (at 85 °C): power contacts: 250 A, signal contacts: 5 A. See derating diagram in Figure 9.

Insulation resistance: 5 000 MΩ min.

Climatic category: 55/125/10.

4.3 Systems of levels

4.3.1 Performance levels

Performance level for these connectors is 1.

4.3.2 Compatibility levels

The compatibility levels of the products specified by this document shall comply with 2.2.3.3 of IEC 61076-1:2006 (level 2 – intermateable).

4.4 Classification into climatic categories

Conditions: according to IEC 60068-1 and Table 1.

Table 1 – Climatic category

Climatic category	Lower temperature °C	Upper temperature °C	Damp heat, steady state days
55/125/10	-55	+125	10

4.5 Clearance and creepage distance

Clearance and creepage distances shall be measured according to IEC 60512-1-2 with the following additional requirements.

For these connectors clearance and creepage distances shall be measured only in mated condition (connector without breaking capacity as defined in IEC 61984).

Power contacts: clearance 5,5 mm min., creepage distance 10 mm min.

Signal contacts: clearance 0,8 mm min., creepage distance 1,2 mm min.

Between any power contact and the most adjacent signal contact: clearance 5,5 mm min., creepage distance 10 mm min.

4.6 Current-carrying capacity

The current-carrying capacity shall be measured according to IEC 60512-5-2, Test 5b and comply with 6.2.6.

Documents
Document Sharing Hub

Full document details: IEC 61076-8-108-2023

4.7 Marking

The marking of the connector and the package shall be in accordance with 2.7 of IEC 61076-1:2006.

5 Dimensional information

5.1 General

Dimensions are given in millimetres. Drawings are shown in the first angle projection. The shape of the connectors may deviate from those given in the following drawings as long as the specified dimensions are not influenced.

For safety aspects IEC 61984 shall be considered.

Missing dimensions shall be chosen according to the common characteristics and intended use.

5.2 Isometric view and common features

5.2.1 Isometric view of free connectors (Figure 1)

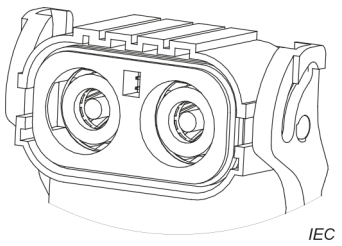

Figure 1 – Free connector isometric view

5.2.2 Isometric view of fixed connectors (Figure 2)

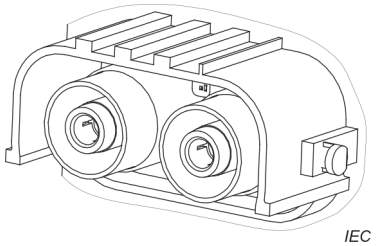

Figure 2 – Fixed connector isometric view

5.3 Engagement (mating) information

5.3.1 General

5.3.1.1 Engaging (mating) direction

Not applicable.

5.3.1.2 Contact levels and sequencing

Power contacts shall be engaged prior to signal contacts in the mating process of connectors. Power contacts shall be withdrawn after signal contacts in the unmating process of connectors. In other words, signal contacts shall be of the FBLM (first break last make) type.

Documents
Document Sharing Hub

Full document details: IEC 61076-8-108-2023

Shielding contacts surrounding each power contact shall make after power contacts and before signal contacts.

5.3.2 Perpendicular to the engaging (mating) direction

Not applicable.

5.3.3 Inclination

Not applicable.

5.4 Free connectors

5.4.1 Dimensions (Figure 3, Table 2, Figure 4, Table 3, Table 4)

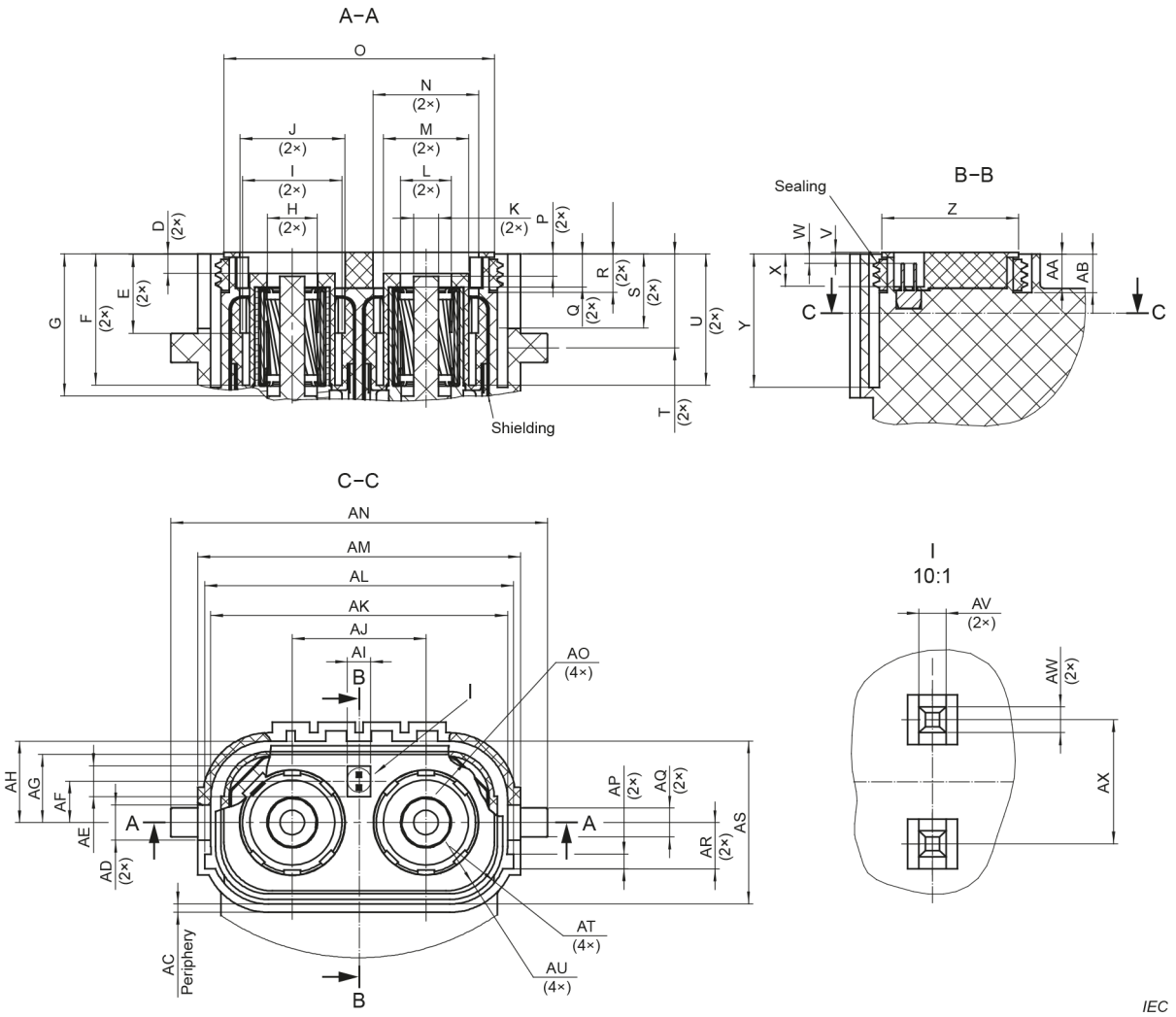

Figure 3 – Free connector

Documents
Document Sharing Hub
Full document details: IEC 61076-8-108-2023

Table 2 – Free connector dimensions

Dimensions in mm

Letter	Minimum	Nominal	Maximum
D	4,6	4,7	4,7
E	19	19	19,3
F	31,7	31,7	32
G	34,3	34,3	34,6
H	Ø12	Ø12	Ø12,2
I	Ø24	Ø24	Ø24,3
J	Ø25,3	Ø25,3	Ø25,6
K	Ø5,9	Ø6	Ø6
L	Ø12,3	Ø12,3	Ø12,6
M	Ø20,3	Ø20,6	Ø20,6
N	Ø25,5	Ø25,5	Ø25,8
O	66	66,3	66,3
P	5,3	5,3	5,4
Q	7,8	7,9	8
R	9,2	9,2	9,5
S	18	18	18,3
T	22,6	22,7	22,8
U	31,8	31,9	32
V	0,3	0,5	0,5
W	2,1	2,2	2,3
X	7,8	7,8	8,1
Y	32,2	32,2	32,5
Z	33,8	34	34
AA	8,2	8,2	8,5
AB	9,2	9,2	9,5
AC	1,9	2	2,1
AD	8,5	8,5	8,6
AE	7,4	7,4	7,5
AF	9,9	10	10,1
AG	16,9	17	17
AH	19,7	19,7	19,8
AI	5,6	5,6	5,7
AJ	32,2	32,3	32,4
AK	71,7	71,7	71,9
AL	74,5	74,5	74,7
AM	77,9	78	78,1
AN	90,9	91	91,1
AO	R11	R11	R11,3
AP	3,5	3,5	3,7
AQ	Ø6,9	Ø7	Ø7
AR	11,1	11,2	11,3
AS	39,4	39,4	39,6
AT	R13,7	R14	R14
AU	R11,7	R11,7	R12
AV	0,61	0,63	0,65
AW	0,61	0,63	0,65
AX	2,9	3	3,1

AVA Documents
Document Sharing Hub

Full document details: IEC 61076-8-108-2023

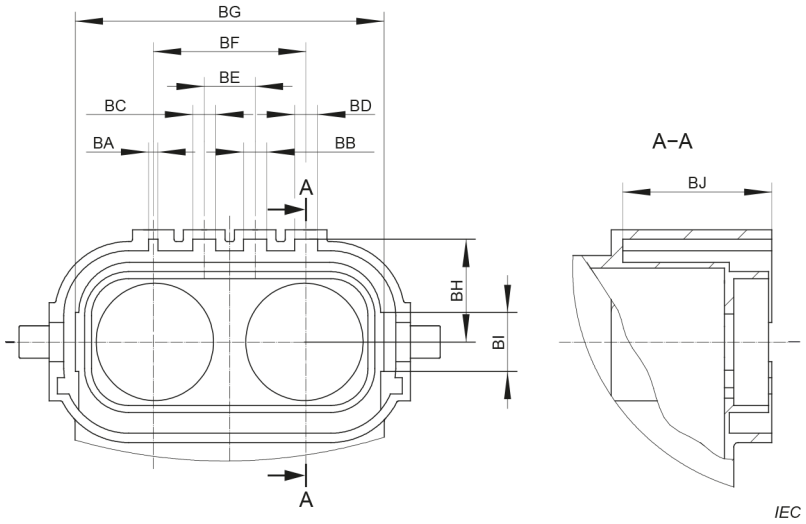

Figure 4 – Free connector codings

The free connector hood may have four different combinations of coding keyways in its contour, as shown in Figure 4, using four integral coding keyways on the short sides of the housing that, in combination with the corresponding four keys in the contour of the mating fixed connector housing, act as coding device, i.e. prevent the mating or the engagement of two connectors of the same family which should not mate in an application.

Table 3 – Free connector codings dimensions (codings 1 and 2)

Dimensions in mm

Letter	Coding 1			Coding 2		
	Minimum	Nominal	Maximum	Minimum	Nominal	Maximum
BA	2	2	2,2	5	5	5,2
BB	5	5	5,2	2	2	2,2
BC	5	5	5,2	5	5	5,2
BD	5	5	5,2	5	5	5,2
BE	10,9	11	11,1	10,9	11	11,1
BF	32,9	33	33,1	32,9	33	33,1
BG	66,6	66,7	66,7	66,6	66,7	66,7
BH	22,2	22,2	22,3	22,2	22,2	22,3
BI	12,7	12,7	12,9	12,7	12,7	12,9
BJ	32,2	32,2	32,4	32,2	32,2	32,4

Documents
Document Sharing Hub
Full document details: IEC 61076-8-108-2023

Table 4 – Free connector codings dimensions (codings 3 and 4)

Dimensions in mm

Letter	Coding 3			Coding 4		
	Minimum	Nominal	Maximum	Minimum	Nominal	Maximum
BA	5	5	5.2	5	5	5,2
BB	5	5	5,2	5	5	5,2
BC	2	2	2,2	5	5	5,2
BD	5	5	5,2	2	2	2,2
BE	10,9	11	11,1	10,9	11	11,1
BF	32,9	33	33,1	32,9	33	33,1
BG	66,6	66,7	66,7	66,6	66,7	66,7
BH	22,2	22,2	22,3	22,2	22,2	22,3
BI	12,7	12,7	12,9	12,7	12,7	12,9
BJ	32,2	32,2	32,4	32,2	32,2	32,4

5.4.2 Terminations

Terminations either according to IEC 60352 series (solderless connections) or according to IEC 60999 series (screw-type and screwless-type clamping units).

Documents
Document Sharing Hub

Full document details: IEC 61076-8-108-2023

5.5 Fixed connectors

5.5.1 Dimensions (Figure 5, Table 5, Figure 6, Table 6, Table 7)

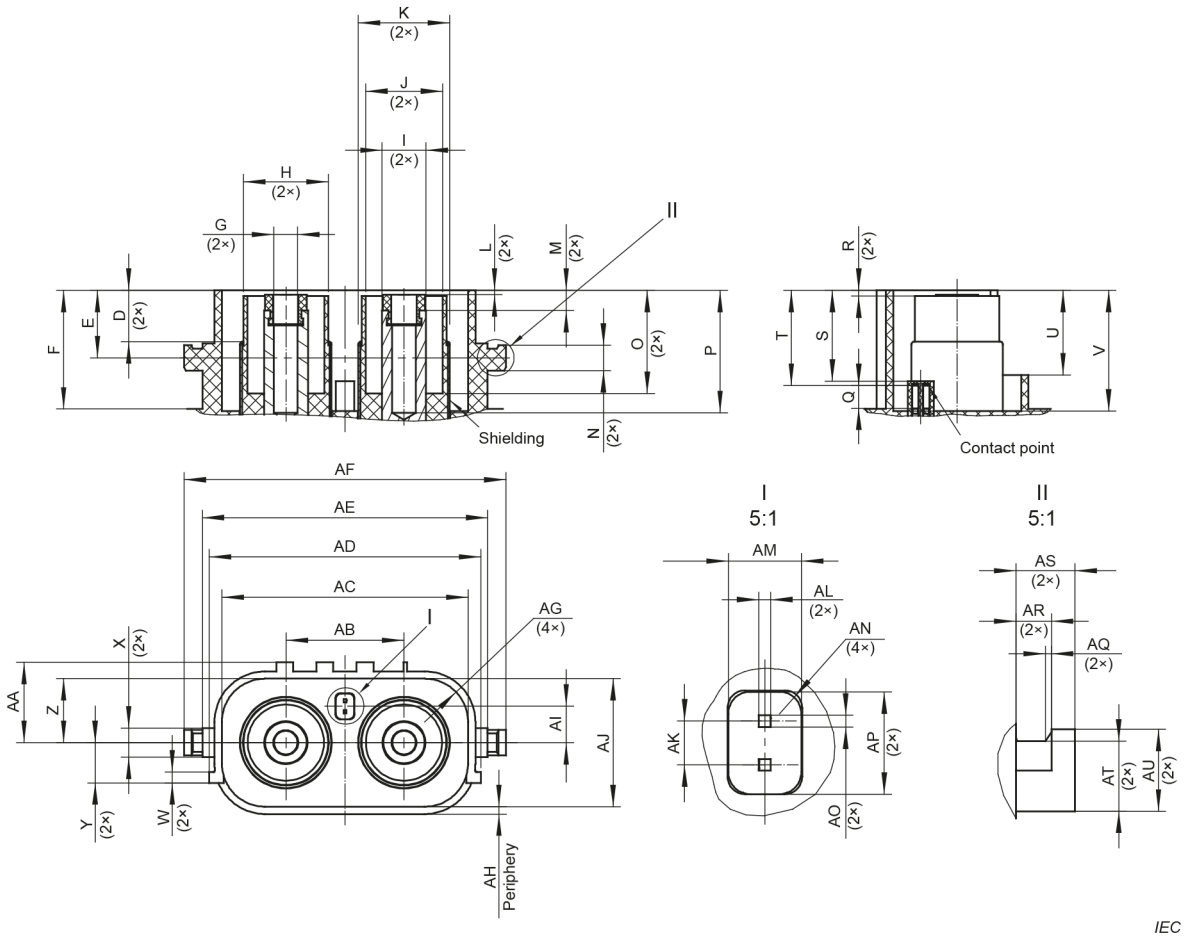

Figure 5 – Fixed connector

Table 5 – Fixed connector dimensions

Dimensions in mm

Letter	Minimum	Nominal	Maximum
D	13,8	14	14
E	18,4	18,5	18,6
F	32,5	32,5	32,8
G	Ø6,5	Ø6,5	Ø6,6
H	Ø23,1	Ø23,2	Ø23,2
I	Ø11,95	Ø12	Ø12,05
J	Ø21	Ø21	Ø21,2
K	Ø24,8	Ø25	Ø25
L	1,2	1,2	1,3
M	5,4	5,5	5,6
N	Ø6,9	Ø7	Ø7
O	28,2	28,2	28,4
P	33,5	33,5	33,8
Q	6,2	6,2	6,4
R	1,5	1,5	1,6
S	26,9	26,9	27

AVA Documents Document Sharing Hub

Dimensions in mm

Letter	Minimum	Nominal	Maximum
T	28,1	28,2	28,3
U	23,1	23,1	23,2
V	33	33	33,5
W	2,9	3	3
X	7,9	8	8
Y	10,9	11	11,1
Z	17,5	17,5	17,6
AA	21,9	22	22
AB	32,2	32,3	32,4
AC	67,2	67,3	67,3
AD	74,1	74,3	74,3
AE	77,8	78	78
AF	87,9	88	88.1
AG	R11,6	R11,8	R12
AH	1,9	2	2,1
AI	9,9	10	10,1
AJ	34,8	35	35
AK	2,9	3	3,1
AL	0,7	0,7	0,8
AM	4,9	5	5
AN	R1,5	R1,5	R1,7
AO	0,7	0,7	0,8
AP	6,9	7	7
AQ	0,4	0,5	0,6
AR	2,9	3	3,1
AS	4,9	5	5,1
AT	5,9	6	6
AU	Ø6,9	Ø7	Ø7

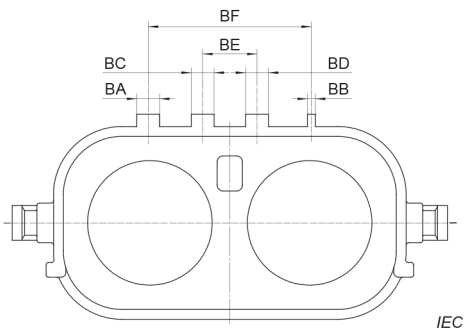

Figure 6 – Fixed connector codings

The fixed connector housing may have four different combinations of coding keys in its contour, as shown in Figure 6, using four integral coding keys on the short sides of the housing that, in combination with the corresponding four keyways in the contour of the mating free connector hood, act as coding device, i.e. prevent the mating or the engagement of two connectors of the same family which should not mate in an application.

Documents
Document Sharing Hub
Full document details: IEC 61076-8-108-2023

Table 6 – Fixed connector codings dimensions (codings 1 and 2)

Dimensions in mm

Letter	Coding 1			Coding 2		
	Minimum	Nominal	Maximum	Minimum	Nominal	Maximum
BA	4,5	4,6	4,6	4,5	4,6	4,6
BB	4,5	4,6	4,6	4,5	4,6	4,6
BC	4,5	4,6	4,6	1,5	1,6	1,6
BD	1,5	1,6	1,6	4,5	4,6	4,6
BE	10,9	11	11,1	10,9	11	11,1
BF	32,9	33	33,1	32,9	33	33,1

Table 7 – Fixed connector codings dimensions (codings 3 and 4)

Dimensions in mm

Letter	Coding 3			Coding 4		
	Minimum	Nominal	Maximum	Minimum	Nominal	Maximum
BA	4,5	4,6	4,6	1,5	1,6	1,6
BB	1,5	1,6	1,6	4,5	4,6	4,6
BC	4,5	4,6	4,6	4,5	4,6	4,6
BD	4,5	4,6	4,6	4,5	4,6	4,6
BE	10,9	11	11,1	10,9	11	11,1
BF	32,9	33	33,1	32,9	33	33,1

5.5.2 Terminations

Terminations either according to IEC 60352 series (solderless connections) or according to IEC 60999 series (screw-type and screwless-type clamping units).

5.6 Accessories

Not applicable.

5.7 Mounting information

Mounting information could be specified upon agreement between manufacturer and customer.

5.8 Gauges – Sizing gauges and retention force gauges

Material: tool steel, with hardness of 60 to 64 HRC according to ISO 6508-1:2015 and surface roughness of Ra 0,2 µm according to ISO 21920-1:2021. See Figure 7, Figure 8 and Table 8.

Documents
Document Sharing Hub

Full document details: IEC 61076-8-108-2023

Dimensions in millimetres

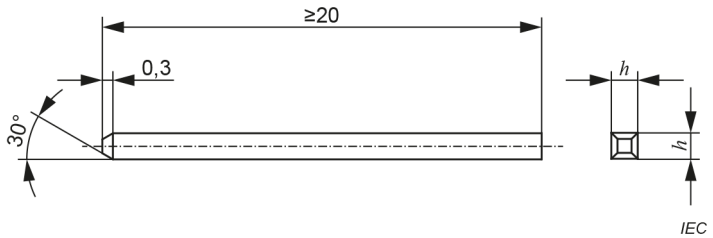

Figure 7 – Gauge for signal contacts

Dimensions in millimetres

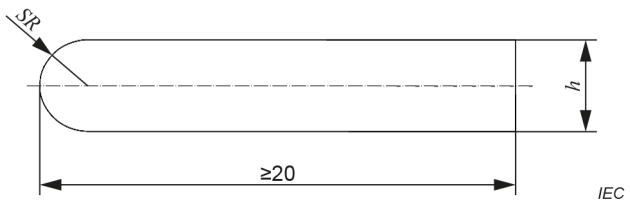

Figure 8 – Gauge for power contacts

Table 8 – Gauge dimensions

Gauge	Contact category	Mass g	Application	*h* mm
P11	Signal contact	-	Sizing	$0{,}63\ ^{0}_{-0{,}005}$
P12		350	Retention force	$0{,}63\ ^{0}_{-0{,}005}$
P21	Power contact	-	Sizing	$\Phi 11{,}95\ ^{0}_{-0{,}005}$
P22		2 000	Retention force	$\Phi 11{,}95\ ^{0}_{-0{,}005}$

6 Technical characteristics

6.1 Classification into climatic categories

See 4.4.

6.2 Electrical characteristics

6.2.1 Clearance and creepage distance

See 4.5.

6.2.2 Voltage proof

Conditions: IEC 60512-4-1, Test 4a, method A.

Standard atmospheric conditions, half of the connectors are mated and half unmated. Test voltage according to Table 9.

Requirements: There shall be no breakdown or flashover.

Documents
Document Sharing Hub
Full document details: IEC 61076-8-108-2023

Table 9 – Voltage proof

NO.	Measuring points	Test voltage V AC RMS	Test time min
1	Between unmated signal contacts, between signal contact and metal shielding	500	1
2	Between power contacts, between power contact and metal shielding, between power contact and signal contact	3 310	

6.2.3 Contact resistance

Conditions: IEC 60512-2-1, Test 2a.

Standard atmospheric conditions.

Requirements: Initial: power contact: 0,15 mΩ max., signal contact: 5 mΩ max.

Final: power contact: 0,24 mΩ max., signal contact: 7,5 mΩ max.

6.2.4 Housing (shell) electrical continuity and shielding effectiveness

6.2.4.1 Housing (shell) electrical continuity

Conditions: IEC 60512-2-6, Test 2f.

Standard atmospheric conditions, mated connectors. Resistance shall be measured per IEC 60512-2-2, Test 2b.

Requirements: resistance: 100 mΩ max.

6.2.4.2 Shielding effectiveness

Condition: IEC 62153-4-6.

Standard atmospheric conditions.

Requirements: equivalent transfer impedance: 50 mΩ max.

6.2.5 Insulation resistance

Conditions: IEC 60512-3-1, Test 3a, method A.

Standard atmospheric conditions, half of the connectors are mated and half unmated.

Test voltage: 500 V DC ± 50 V DC.

Requirements: Initial: between contacts, contacts and metal shielding: 5 000 MΩ min.

Final: between contacts, contacts and metal shielding: 200 MΩ min.

6.2.6 Current-carrying capacity

The current-carrying capacity shall be verified according to IEC 60512-5-2, Test 5b, with the maximum accepted cross-sectional area (70 mm^2), to comply with the rated current (250 A at 85 °C) and the upper limiting temperature (125 °C). See in Figure 9 the current-temperature derating.

Documents
Document Sharing Hub

Full document details: IEC 61076-8-108-2023