IEC 61084-2-2

Edition 2.0 2017-03

INTERNATIONAL STANDARD

NORME INTERNATIONALE

colour inside

Cable trunking systems and cable ducting systems for electrical installations – Part 2-2: Particular requirements – Cable trunking systems and cable ducting systems intended for mounting underfloor, flushfloor, or onfloor

Systèmes de goulottes et systèmes de conduits-profilés pour installations électriques – Partie 2-2: Exigences particulières – Systèmes de goulottes et systèmes de conduits-profilés prévus pour être montés en sous-sol, encastrés dans le sol, ou sur le sol

IEC 61084-2-2:2017-03(en-fr)

AVA Documents
Document Sharing Hub

Full document details: IEC 61084-2-2 2017

THIS PUBLICATION IS COPYRIGHT PROTECTED
Copyright © 2017 IEC, Geneva, Switzerland

All rights reserved. Unless otherwise specified, no part of this publication may be reproduced or utilized in any form or by any means, electronic or mechanical, including photocopying and microfilm, without permission in writing from either IEC or IEC's member National Committee in the country of the requester. If you have any questions about IEC copyright or have an enquiry about obtaining additional rights to this publication, please contact the address below or your local IEC member National Committee for further information.

Droits de reproduction réservés. Sauf indication contraire, aucune partie de cette publication ne peut être reproduite ni utilisée sous quelque forme que ce soit et par aucun procédé, électronique ou mécanique, y compris la photocopie et les microfilms, sans l'accord écrit de l'IEC ou du Comité national de l'IEC du pays du demandeur. Si vous avez des questions sur le copyright de l'IEC ou si vous désirez obtenir des droits supplémentaires sur cette publication, utilisez les coordonnées ci-après ou contactez le Comité national de l'IEC de votre pays de résidence.

IEC Central Office
3, rue de Varembé
CH-1211 Geneva 20
Switzerland

Tel.: +41 22 919 02 11
Fax: +41 22 919 03 00
info@iec.ch
www.iec.ch

About the IEC
The International Electrotechnical Commission (IEC) is the leading global organization that prepares and publishes International Standards for all electrical, electronic and related technologies.

About IEC publications
The technical content of IEC publications is kept under constant review by the IEC. Please make sure that you have the latest edition, a corrigenda or an amendment might have been published.

IEC Catalogue - webstore.iec.ch/catalogue
The stand-alone application for consulting the entire bibliographical information on IEC International Standards, Technical Specifications, Technical Reports and other documents. Available for PC, Mac OS, Android Tablets and iPad.

IEC publications search - www.iec.ch/searchpub
The advanced search enables to find IEC publications by a variety of criteria (reference number, text, technical committee,…). It also gives information on projects, replaced and withdrawn publications.

IEC Just Published - webstore.iec.ch/justpublished
Stay up to date on all new IEC publications. Just Published details all new publications released. Available online and also once a month by email.

Electropedia - www.electropedia.org
The world's leading online dictionary of electronic and electrical terms containing 20 000 terms and definitions in English and French, with equivalent terms in 16 additional languages. Also known as the International Electrotechnical Vocabulary (IEV) online.

IEC Glossary - std.iec.ch/glossary
65 000 electrotechnical terminology entries in English and French extracted from the Terms and Definitions clause of IEC publications issued since 2002. Some entries have been collected from earlier publications of IEC TC 37, 77, 86 and CISPR.

IEC Customer Service Centre - webstore.iec.ch/csc
If you wish to give us your feedback on this publication or need further assistance, please contact the Customer Service Centre: csc@iec.ch.

A propos de l'IEC
La Commission Electrotechnique Internationale (IEC) est la première organisation mondiale qui élabore et publie des Normes internationales pour tout ce qui a trait à l'électricité, à l'électronique et aux technologies apparentées.

A propos des publications IEC
Le contenu technique des publications IEC est constamment revu. Veuillez vous assurer que vous possédez l'édition la plus récente, un corrigendum ou amendement peut avoir été publié.

Catalogue IEC - webstore.iec.ch/catalogue
Application autonome pour consulter tous les renseignements bibliographiques sur les Normes internationales, Spécifications techniques, Rapports techniques et autres documents de l'IEC. Disponible pour PC, Mac OS, tablettes Android et iPad.

Recherche de publications IEC - www.iec.ch/searchpub

La recherche avancée permet de trouver des publications IEC en utilisant différents critères (numéro de référence, texte, comité d'études,…). Elle donne aussi des informations sur les projets et les publications remplacées ou retirées.

IEC Just Published - webstore.iec.ch/justpublished

Restez informé sur les nouvelles publications IEC. Just Published détaille les nouvelles publications parues. Disponible en ligne et aussi une fois par mois par email.

Electropedia - www.electropedia.org

Le premier dictionnaire en ligne de termes électroniques et électriques. Il contient 20 000 termes et définitions en anglais et en français, ainsi que les termes équivalents dans 16 langues additionnelles. Egalement appelé Vocabulaire Electrotechnique International (IEV) en ligne.

Glossaire IEC - std.iec.ch/glossary
65 000 entrées terminologiques électrotechniques, en anglais et en français, extraites des articles Termes et Définitions des publications IEC parues depuis 2002. Plus certaines entrées antérieures extraites des publications des CE 37, 77, 86 et CISPR de l'IEC.

Service Clients - webstore.iec.ch/csc

Si vous désirez nous donner des commentaires sur cette publication ou si vous avez des questions contactez-nous: csc@iec.ch.

Documents
Document Sharing Hub

Full document details: IEC 61084-2-2 2017

IEC 61084-2-2

Edition 2.0 2017-03

INTERNATIONAL STANDARD

NORME INTERNATIONALE

colour inside

Cable trunking systems and cable ducting systems for electrical installations – Part 2-2: Particular requirements – Cable trunking systems and cable ducting systems intended for mounting underfloor, flushfloor, or onfloor

Systèmes de goulottes et systèmes de conduits-profilés pour installations électriques – Partie 2-2: Exigences particulières – Systèmes de goulottes et systèmes de conduits-profilés prévus pour être montés en sous-sol, encastrés dans le sol, ou sur le sol

INTERNATIONAL
ELECTROTECHNICAL
COMMISSION

COMMISSION
ELECTROTECHNIQUE
INTERNATIONALE

ICS 29.060.01; 29.120.10

ISBN 978-2-8322-4119-6

Warning! Make sure that you obtained this publication from an authorized distributor.
Attention! Veuillez vous assurer que vous avez obtenu cette publication via un distributeur agréé.

AVA Documents
Document Sharing Hub

® Registered trademark of the International Electrotechnical Commission
Marque déposée de la Commission Electrotechnique Internationale

Full document details: IEC 61084-2-2 2017

CONTENTS

FOREWORD ... 3
1 Scope ... 5
2 Normative references ... 5
3 Terms and definitions ... 5
4 General requirements ... 6
5 General conditions for tests ... 7
6 Classification ... 7
7 Marking and documentation ... 7
8 Dimensions ... 8
9 Construction ... 8
10 Mechanical properties ... 9
11 Electrical properties ... 14
12 Thermal properties ... 14
13 Fire hazard ... 14
14 External influences ... 14
15 Electromagnetic compatibility ... 15
Annex A (informative) Types of cable trunking systems (CTS) and cable ducting systems (CDS) ... 27
Annex B (normative) CTS/CDS IK code ... 28
Annex AA (normative) Mechanical load tests ... 29
Bibliography ... 31

Figure 101 – Types and application of CTS/CDS for underfloor, flushfloor or onfloor installations ... 16
Figure 102 – Examples of trunking and ducting installations ... 17
Figure 103 – Example of underfloor embedded CDS according to 3.101 ... 18
Figure 104 – Example of flushfloor CTS according to 3.102 ... 19
Figure 105 – Example of onfloor CTS according to 3.103 ... 20
Figure 106 – Principles for arrangement ... 21
Figure 107 – Examples for arrangement ... 22
Figure 108 – Load test set-up for CTS/CDS in accordance with 10.5.103 ... 24
Figure 109 – Load test set-up for CTS/CDS in accordance with 10.5.104 ... 26

Table A.2 – Types of CTS and CDS for floor installation ... 27
Table AA.1 – Mechanical load tests ... 29

Documents
Document Sharing Hub
Full document details: IEC 61084-2-2 2017

INTERNATIONAL ELECTROTECHNICAL COMMISSION

CABLE TRUNKING SYSTEMS AND CABLE DUCTING SYSTEMS FOR ELECTRICAL INSTALLATIONS –

Part 2-2: Particular requirements – Cable trunking systems and cable ducting systems intended for mounting underfloor, flushfloor, or onfloor

FOREWORD

1) The International Electrotechnical Commission (IEC) is a worldwide organization for standardization comprising all national electrotechnical committees (IEC National Committees). The object of IEC is to promote international co-operation on all questions concerning standardization in the electrical and electronic fields. To this end and in addition to other activities, IEC publishes International Standards, Technical Specifications, Technical Reports, Publicly Available Specifications (PAS) and Guides (hereafter referred to as "IEC Publication(s)"). Their preparation is entrusted to technical committees; any IEC National Committee interested in the subject dealt with may participate in this preparatory work. International, governmental and non-governmental organizations liaising with the IEC also participate in this preparation. IEC collaborates closely with the International Organization for Standardization (ISO) in accordance with conditions determined by agreement between the two organizations.
2) The formal decisions or agreements of IEC on technical matters express, as nearly as possible, an international consensus of opinion on the relevant subjects since each technical committee has representation from all interested IEC National Committees.
3) IEC Publications have the form of recommendations for international use and are accepted by IEC National Committees in that sense. While all reasonable efforts are made to ensure that the technical content of IEC Publications is accurate, IEC cannot be held responsible for the way in which they are used or for any misinterpretation by any end user.
4) In order to promote international uniformity, IEC National Committees undertake to apply IEC Publications transparently to the maximum extent possible in their national and regional publications. Any divergence between any IEC Publication and the corresponding national or regional publication shall be clearly indicated in the latter.
5) IEC itself does not provide any attestation of conformity. Independent certification bodies provide conformity assessment services and, in some areas, access to IEC marks of conformity. IEC is not responsible for any services carried out by independent certification bodies.
6) All users should ensure that they have the latest edition of this publication.
7) No liability shall attach to IEC or its directors, employees, servants or agents including individual experts and members of its technical committees and IEC National Committees for any personal injury, property damage or other damage of any nature whatsoever, whether direct or indirect, or for costs (including legal fees) and expenses arising out of the publication, use of, or reliance upon, this IEC Publication or any other IEC Publications.
8) Attention is drawn to the Normative references cited in this publication. Use of the referenced publications is indispensable for the correct application of this publication.
9) Attention is drawn to the possibility that some of the elements of this IEC Publication may be the subject of patent rights. IEC shall not be held responsible for identifying any or all such patent rights.

International Standard IEC 61084-2-2 has been prepared by subcommittee 23A: Cable management systems, of IEC technical committee 23: Electrical accessories.

This second edition cancels and replaces the first edition published in 2003. This edition constitutes a technical revision.

This edition includes the following significant technical changes with respect to the previous edition:

- classification;
- construction;
- mechanical and electrical properties.

This International standard is to be used in conjunction with IEC 61084-1:2017.

Documents
Document Sharing Hub

Full document details: IEC 61084-2-2 2017

The text of this standard is based on the following documents:

FDIS	Report on voting
23A/828/FDIS	23A/836/RVD

Full information on the voting for the approval of this standard can be found in the report on voting indicated in the above table.

This publication has been drafted in accordance with the ISO/IEC Directives, Part 2.

This part of the IEC 61084 series supplements or modifies the corresponding clauses of IEC 61084-1:2017 as follows:

– where no particular clause or subclause of IEC 61084-1 is mentioned, the corresponding clause or subclause of IEC 61084-1 applies as far as it is reasonable;
– where “addition” or “replacement” is stated, the relevant text of IEC 61084-1 is to be adapted accordingly;
– subclauses, figures and tables which are additional to those in IEC 61084-1 are numbered starting from 101.

In this standard, the following print types are used:

– requirements and definitions: roman type;
– *compliance statements: italic type.*

A list of all parts in the IEC 61084 series, published under the general title *Cable trunking and cable ducting systems for electrical installations*, can be found on the IEC website.

The committee has decided that the contents of this publication will remain unchanged until the stability date indicated on the IEC website under "http://webstore.iec.ch" in the data related to the specific publication. At this date, the publication will be

- reconfirmed,
- withdrawn,
- replaced by a revised edition, or
- amended.

IMPORTANT – The 'colour inside' logo on the cover page of this publication indicates that it contains colours which are considered to be useful for the correct understanding of its contents. Users should therefore print this document using a colour printer.

Documents
Document Sharing Hub

Full document details: IEC 61084-2-2 2017

CABLE TRUNKING SYSTEMS AND CABLE DUCTING SYSTEMS FOR ELECTRICAL INSTALLATIONS –

Part 2-2: Particular requirements – Cable trunking systems and cable ducting systems intended for mounting underfloor, flushfloor, or onfloor

1 Scope

This part of the IEC 61084 series specifies requirements and tests for cable trunking systems (CTS) and cable ducting systems (CDS) intended for the accommodation, and where necessary for the electrically protective separation, of insulated conductors, cables and possibly other electrical equipment in electrical and/or communication systems installations. The maximum voltage of these installations is 1 000 V AC and 1 500 V DC.

These systems are intended for mounting underfloor, flushfloor or onfloor.

This document does not apply to CTS/CDS which are intended to be fixed to the wall and supported by the floor.

This document does not apply to conduit systems, cable tray systems, cable ladder systems, power track systems or equipment covered by other standards.

2 Normative references

This clause of Part 1 is applicable, except as follows:

Addition:

IEC 60068-2-60:2015, *Environmental testing – Part 2-60: Tests – Test Ke: Flowing mixed gas corrosion test*

IEC 60068-2-75:2014, *Environmental testing – Part 2-75: Tests – Test Eh: Hammer tests*

IEC 61084-1:2017, *Cable trunking systems and cable ducting systems for electrical installations – Part 1: General requirements*

3 Terms and definitions

This clause of Part 1 is applicable, except as follows:

3.1 *Replace Note 1 to entry by:*

Note 1 to entry: Different types of CTS are shown in Figure 101 and explained in Annex A.

3.2 *Replace Note 1 to entry by:*

Note 1 to entry: Different types of CDS are shown in Figure 101 and explained in Annex A.

Documents
Document Sharing Hub
Full document details: IEC 61084-2-2 2017

3.3 *Addition:*

f) service unit

Replace Note 1 to entry by:

Note 1 to entry: A system does not necessarily include all system components a) to f). Different combinations of system components can be used.

Addition:

3.101
underfloor CTS/CDS
CTS/CDS whose components, except access units and service units, are intended to be mounted within or under a floor and in normal use are not exposed to traffic loads

Note 1 to entry: See Figures 102a), 102c) and 103.

3.102
flushfloor CTS/CDS
CTS/CDS whose components, except access units and service units, are intended to be mounted flush such that the height above the upper level of the floor covering is not more than 4 mm

Note 1 to entry: The upper surface is considered to be exposed to traffic loads.

Note 1 to entry: See Figures 102b) and 104.

3.103
onfloor CTS/CDS
CTS/CDS whose components are intended to be mounted on a floor such that the height above the upper level of the floor covering is greater than 4 mm

Note 1 to entry: The upper surface is considered to be exposed to traffic loads.

Note 2 to entry: See Figures 102d) and 105.

3.104
access unit
system component intended to provide access to insulated conductors or cables

3.105
service unit
system component intended for incorporation of one or more apparatus either directly or by means of one or more apparatus mounting devices

3.106
service unit
<when not in use> service unit which has no cables connected to electrical equipment

3.107
service unit
<when in use> service unit which has cables connected to electrical equipment

4 General requirements

This clause of Part 1 is applicable.

Documents
Document Sharing Hub

Full document details: IEC 61084-2-2 2017

5 General conditions for tests

This clause of Part 1 is applicable.

6 Classification

This clause of Part 1 is applicable, except as follows:

Additional subclauses:

6.101 According to floor treatment

6.101.1 CTS/CDS for dry-treatment of floor

6.101.2 CTS/CDS for wet-treatment of floor when the service unit is not in use

6.101.3 CTS/CDS for wet-treatment of floor when the service unit is in use

6.102 According to resistance to vertical load applied through small surface area

6.102.1 CTS/CDS for 500 N

6.102.2 CTS/CDS for 750 N

6.102.3 CTS/CDS for 1 000 N

6.102.4 CTS/CDS for 1 500 N

6.102.5 CTS/CDS for 2 000 N

6.102.6 CTS/CDS for 2 500 N

6.102.7 CTS/CDS for 3 000 N

6.103 Optional classification according to resistance to vertical load applied through large surface area

6.103.1 CTS/CDS for 2 000 N

6.103.2 CTS/CDS for 3 000 N

6.103.3 CTS/CDS for 5 000 N

6.103.4 CTS/CDS for 10 000 N

6.103.5 CTS/CDS for 15 000 N

7 Marking and documentation

This clause of Part 1 is applicable, except as follows:

Additional subclauses:

7.101 Access units and service units of systems classified according to 6.101.1 shall be marked that they are suitable for dry treatment of floor only. The marking shall be visible by the user which may be achieved by opening the cover.

NOTE This marking can be in the form of text or graphic.

Documents
Document Sharing Hub

Full document details: IEC 61084-2-2 2017

7.102 Service units shall be marked with a warning about the potential damage to electrical accessories by closing the cover. The marking shall be visible by the user which may be achieved by opening the cover.

NOTE This marking can be in the form of text or graphic.

7.103 *Compliance with 7.101 and 7.102 is checked by inspection.*

8 Dimensions

This clause of Part 1 is applicable, except as follows:

Addition:

There are no dimensions requirements.

9 Construction

This clause of Part 1 is applicable, except as follows:

Addition:

9.101 Access covers of underfloor, flushfloor and onfloor CTS/CDS, which in normal use are subjected to external mechanical loads, shall resist movement and unintentional opening.

Compliance is checked by inspection and by the tests of 10.5.

9.102 Service units installed flushfloor shall protect the installed electrical apparatus and the plug from direct impact when in use. This protection shall be effective and shall not cause damage to the outgoing cable.

Compliance is checked by inspection and by the tests of 10.3.

9.103 It shall be possible to securely fix:

– service units to the system;
– electrical apparatus to the service units.

Compliance is checked by the tests of 10.3 and 10.5.1.

9.104 When the service unit is not in use, it shall be possible to close openings intended for the passage of cables.

Openings, when in use, in underfloor and flushfloor CTS/CDS, for the passage of cables, need not be closed if one of its dimensions is less than 20 mm in one direction.

Compliance is checked by inspection and measurement.

9.105 Underfloor and flushfloor CTS/CDS which in normal use are embedded in screed material shall be protected against ingress of the screed material.

Openings leading to the interior of underfloor and flushfloor CTS/CDS which in normal use, are located below the upper level of the floor without covering, shall not be wider than 7 mm in one direction.

AVA Documents
Document Sharing Hub

Full document details: IEC 61084-2-2 2017

Compliance is checked by inspection and measurement.

NOTE The dimensioning of the maximum width of the clear opening is based on the grain size of cementitious screeds.

9.106 CTS/CDS declared according to 6.101.2 and 6.101.3 shall avoid water coming into contact with insulated conductors and live parts during wet-treatment of floor by one or a combination of the following methods which may vary within the system:

– method 1: ensuring by design that water does not come into contact with insulated conductors and live parts when the water level is 10 mm above the upper level of the floor covering;
– method 2: providing an IP rating not less than IPX4;
– method 3: providing manufacturer's instructions which require that insulated conductors and live parts are positioned not less than 10 mm above the upper level of the floor covering.

For method 1, compliance is checked by measurement. For method 2, compliance is checked by the test of 14.1.2. For method 3, compliance is checked by inspection.

9.107 Access cover of service unit, if any, shall withstand repeated opening and closing as in normal use.

Compliance is checked by 100 cycles of opening and closing of the access cover.

After the test there shall be no damage to impair the further use of the access cover.

9.108 Additional requirements for service units intended to be installed onfloor are given in IEC 61084-2-4:2017.

10 Mechanical properties

This clause of Part 1 is applicable, except as follows:

10.1 Mechanical strength

Replacement:

Underfloor, flushfloor and onfloor CTS/CDS shall have adequate mechanical strength.

Compliance is checked by the tests specified in 10.3 and 10.5 according to Annex AA.

10.2 Cable support test

Not applicable.

10.3 Impact test

10.3.2 Impact test for installation and application

Additional subclauses:

10.3.2.101 Systems components only intended to be mounted underfloor are not tested. The test is carried out on an assembly made of one or more trunking lengths or ducting lengths with the relevant system component, if any, to fulfil the various functions of the system and prepared according to the manufacturer’s instructions. More than one assembly may be

AVA Documents Document Sharing Hub

Full document details: IEC 61084-2-2 2017

necessary to fulfil the various functions of the system. In each direction, the length *L* of trunking length or ducting length coming out of the functional area associated with the function of the system is as long as the width *W* of the trunking length or ducting length, or 250 mm, whichever is the greater. The tolerance of *L* is ± 25 mm.

NOTE 1 Functional area refers, for example, to a fitting, an apparatus mounting device or a junction as shown in Figure 106.

The samples are mounted on a rigid smooth support such as a plywood board 16 mm thick, with a 50 mm minimum spacing between the assembly and the edge of the support.

NOTE 2 For flushfloor CTS/CDS additional provision can be included to simulate the influence of the floor material on the side of the product.

Other system components can be included to prevent movements. These system components are the system components to terminate the trunking length or ducting length, if any. When there is no such system component, a system component chosen by the manufacturer is used.

Examples for arrangement are shown in Figure 107.

Before the test non-metallic system components and composite system components are aged at the temperature declared according to Table 3 of Part 1 with a tolerance of ±2 °C for (168 ± 4) h continuously.

10.3.2.102 The impact test apparatus according to Clause 4 of IEC 60068-2-75:2014, is mounted on a solid wall or structure providing sufficient support.

The samples are placed in a cabinet at the temperature declared according to Table 2 with a tolerance of ±2 °C.

10.3.2.103 After 2 h, each sample is, in turn, removed from the cabinet and immediately placed in position in the impact test apparatus.

At 12 s ± 2 s after the removal of the sample from the cabinet the hammer is allowed to fall so that an impact is applied as far as possible perpendicular to the accessible region of the sample likely to be the weakest. Compliance with impact applied before 10 s provides also compliance with this test of the standard.

NOTE 1 The region likely to be the weakest can be on the relevant system component but can also be on a trunking length or a ducting length.

No impact is applied to knockouts, membranes and the like.

No impact is applied within 50 mm of any open extremity of the sample.

NOTE 2 When another system component has been included at an extremity of the sample to prevent movements, this extremity is still considered open.

Instead of placing the samples in a cabinet and applying the impact at 12 s ± 2 s after the removal of the sample from the cabinet, it is allowed to apply the impact in a climatic chamber at the temperature declared according to Table 2 with a tolerance of ±2 °C on samples placed at this temperature for 2 h. Compliance in the climatic chamber is sufficient. In case of failure in the climatic chamber, compliance using the cabinet provides compliance with the standard.

10.3.2.104 After the test:

– the assemblies shall show no cracks or similar damage visible to normal or corrected vision without magnification, and

Documents
Document Sharing Hub

Full document details: IEC 61084-2-2 2017

– the assemblies shall remain intact, and
– the service unit cover shall be in a position

such that safety is not impaired.

In case of doubt, the test of 14.1.3 of Part 1 is carried out on the impacted samples to check that the declared degree of protection against access to hazardous parts is maintained. The declared degree of protection against access to hazardous parts is either the additional letter directly declared by the manufacturer according 6.7.3 of Part 1, if any, or the degree of protection against access to hazardous parts indirectly declared by the manufacturer according 6.7.1 of Part 1.

NOTE Any cracks in internal dividers which are not likely to impair electrical safety or use are ignored. Electrical safety can be impaired when the impact creates a sharp edge on a partition which can damage insulated conductors or cables (see 9.1 of Part 1)

10.4 Linear deflection test

Not applicable.

10.5 External load test

Additional subclauses:

10.5.101 Underfloor CTS/CDS, flushfloor CTS/CDS and onfloor CTS/CDS shall have sufficient mechanical strength against external mechanical loads likely to occur during transport, storage, installation and normal use.

Compliance is checked by the tests of 10.5.102, 10.5.103 and 10.5.104.

Any part for temporary use only during the installation phase does not need to comply with these tests but may be included for the test of 10.5.102 to allow compliance of other parts.

A summary of tests is given in Annex AA.

10.5.102 Load test for installation

The test is carried out on an assembly made of one or more trunking lengths or ducting lengths with the relevant system component, if any, to fulfil the various functions of the system and prepared according to the manufacturer's instructions. More than one assembly may be necessary to fulfil the various functions of the system. In each direction, the length L of trunking length or ducting length coming out of the functional area associated with the function of the system is as long as the width W of the trunking length or ducting length, or 500 mm, whichever is the greater. The tolerance of L is ± 25 mm.

NOTE 1 Functional area refers, for example, to a fitting, an apparatus mounting device or a junction as shown in Figure 106.

The samples are mounted on a horizontal rigid smooth support such as a plywood board 16 mm thick, with a 50 mm minimum spacing between the assembly and the edge of the support.

NOTE 2 Other system components can be included to prevent movements. These system components are the system components to terminate the trunking length or ducting length, if any. When there is no such system component, a system component chosen by the manufacturer is used.

Examples for arrangement are shown in Figure 107.

Documents
Document Sharing Hub

Full document details: IEC 61084-2-2 2017

Before the test non-metallic system components and composite components are aged at the temperature declared according to Table 3 with a tolerance of *±2 °C* for (168 ± 4) h continuously.

A vertical force is applied centrally for 120 s ± 5 s to a steel cube of 50 mm ±0,5 mm with an edge radius of approximately 1 mm.

The cube is placed approximately in the middle of the length of the sample and in the most unfavourable position in the width of the sample. In the case of multi-compartment CTS/CDS whose partition(s) provide support, the middle of the largest compartment is selected.

To allow for settlement of the sample, a pre-load of 25 N ± 5 N is applied and then the measurement apparatus is calibrated to zero.

For the test of CTS/CDS intended to be installed underfloor under a raised floor a force of 250 N (+ 10 N, 0) is applied.

For the test of CDS intended to be embedded underfloor and CTS/CDS intended to be installed flushfloor a force of 750 N (+ 30 N, 0) is applied except on parts of which the cover remains visible and above the floor level during the whole installation phase for which a force of 250 N (+ 10 N, 0) is applied.

During the test the vertical displacement of the cube shall be less than 25 mm.

Cracks are allowed but the maximum vertical displacement of the cube shall not be exceeded.

10.5.103 Load test for application – Force applied through small surface area

The test is carried out on an assembly made of one or more trunking lengths or ducting lengths with the relevant system component, if any, to fulfil the various functions of the system and prepared according to the manufacturer's instructions. More than one assembly may be necessary to fulfil the various functions of the system. In each direction, the length L of trunking length or ducting length coming out of the functional area associated with the function of the system is as long as the width W of the trunking length or ducting length, or 500 mm, whichever is the greater. The tolerance of L is ± 25 mm.

NOTE 1 Functional area refers, for example, to a fitting, an apparatus mounting device or a junction as shown in Figure 106.

The samples are mounted on a horizontal rigid smooth support such as a plywood board 16 mm thick, with a 50 mm minimum spacing between the assembly and the edge of the support.

NOTE 2 For flushfloor CTS/CDS additional provision can be included to simulate the influence of the floor material on the side of the product.

NOTE 3 Other system components can be included to prevent movements. These system components are the system components to terminate the trunking length or ducting length, if any. When there is no such system component, a system component chosen by the manufacturer is used.

Examples for arrangement are shown in Figure 107.

Before the test non-metallic system components and composite system components are aged at the temperature declared according to Table 3 with a tolerance of *± 2°C* for (168 ± 4) h continuously.

The surface of the sample which can be exposed to traffic is loaded with the force declared according to 6.102.

Documents
Document Sharing Hub
Full document details: IEC 61084-2-2 2017

A vertical force is applied through a steel cylinder of 13,3 mm ± 0,1 mm diameter with an edge radius of 1 mm providing a contact surface of approximately 1 cm^2 with a minimum length of 30 mm (Figure 108).

The cylinder is placed approximately in the middle of the length of the sample and in the most unfavourable position in the width of the sample. In the case of multi-compartment CTS/CDS whose partition(s) provide support, the middle of the largest compartment is selected.

To allow for settlement of the sample, a pre-load of 50 N ± 10 N is applied and then the measurement apparatus is calibrated to zero.

The force is gradually increased up to the value declared according to 6.102 with a tolerance (+ 4 %, 0) over 15 s ± 5 s and maintained for 60 s ± 1 s.

During the test the samples shall show no deflection greater than 6 mm. After the tests the samples shall show no signs of disintegration, nor shall there be any crack visible to normal or corrected vision without additional magnification. One min after the load has been removed, there shall be no permanent deformation exceeding 3 mm.

The electrical safety shall not be impaired.

In case of doubt, the test of 14.1.3 of Part 1 is carried out on the sample to check that the declared degree of protection against access to hazardous parts is maintained. The declared degree of protection against access to hazardous parts is either the additional letter directly declared by the manufacturer according 6.7.3 of Part 1, if any, or the degree of protection against access to hazardous parts indirectly declared by the manufacturer according 6.7.1 of Part 1.

10.5.104 Load test for application – Force applied through large surface area

The test is carried out on an assembly made of one or more trunking lengths or ducting lengths with the relevant system component, if any, to fulfil the various functions of the system and prepared according to the manufacturer's instructions. More than one assembly may be necessary to fulfil the various functions of the system. In each direction, the length L of trunking length or ducting length coming out of the functional area associated with the function of the system is as long as the width W of the trunking length or ducting length, or 500 mm, whichever is the greater. The tolerance of L is ± 25 mm.

NOTE 1 Functional area refers, for example, to a fitting, an apparatus mounting device or a junction as shown in Figure 106.

The samples are mounted on a rigid smooth support such as a plywood board 16 mm thick, with a 50 mm minimum spacing between the assembly and the edge of the support.

NOTE 2 For flushfloor CTS/CDS additional provision can be included to simulate the influence of the floor material on the side of the product.

NOTE 3 Other system components can be included to prevent movements. These system components are the system components to terminate the trunking length or ducting length, if any. When there is no such system component, a system component chosen by the manufacturer is used.

Examples for arrangement are shown in Figure 107.

Before the test non-metallic system components and composite system components are aged at the temperature declared according to Table 3 with a tolerance of ±2 °C for (168 ± 4) h continuously.

The surface of the sample which can be exposed to traffic is loaded with the force declared according to 6.103.

AVA Documents
Document Sharing Hub

Full document details: IEC 61084-2-2 2017

A vertical force is applied through a circular steel plate with a 130 mm ± 0,5 mm diameter and a thickness of 20 mm ± 1 mm with an edge radius of approximately 2 mm (Figure 109).

The circular plate is placed approximately in the middle of the length of the sample and in the most unfavourable position in the width of the sample. In the case of multi-compartment CTS/CDS whose partition(s) provide support, the middle of the largest compartment is selected.

To allow for settlement of the sample, a pre-load of 200 N ± 40 N is applied and then the measurement apparatus is calibrated to zero.

The force is gradually increased up to the value declared according to 6.103 with a tolerance (+ 4 %, 0) over 15 s ± 5 s and maintained for 60 s ± 1 s.

During the test the samples shall show no deflection greater than 6 mm. After the tests the samples shall show no signs of disintegration, nor shall there be any crack visible to normal or corrected vision without additional magnification. One min after the load has been removed, there shall be no permanent deformation exceeding 3 mm.

The electrical safety shall not be impaired.

In case of doubt, the test of 14.1.3 of Part 1 is carried out on the sample to check that the declared degree of protection against access to hazardous parts is maintained. The declared degree of protection against access to hazardous parts is either the additional letter directly declared by the manufacturer according 6.7.3 of Part 1, if any, or the degree of protection against access to hazardous parts indirectly declared by the manufacturer according 6.7.1 of Part 1.

10.6 System access cover retention

Addition after the fourth paragraph:

NOTE Functional area refers, for example, to a fitting, an apparatus mounting device, a junction as shown in Figure 106.

Addition after the sixth paragraph:

Examples for arrangement are shown in Figure 107.

11 Electrical properties

This clause of Part 1 is applicable.

12 Thermal properties

This clause of Part 1 is applicable.

13 Fire hazard

This clause of Part 1 is applicable.

14 External influences

This clause of Part 1 is applicable, except as follows:

Documents
Document Sharing Hub

Full document details: IEC 61084-2-2 2017

14.1 Degree of protection provided by enclosure

Add after the third paragraph the following:

The assembly is placed in such a way that the upper surface of floor is in the horizontal plane. The test floor is flat and extends 100 mm ± 10 mm beyond the edges of the samples.

Replace the fourth paragraph by:

The following ageing treatment is carried out on assemblies including non-metallic system component or composite system component before the tests of 14.1.1, 14.1.2 and 14.1.3.

14.1.3 Protection against ingress of water

Add after the fourth paragraph the following:

For service unit and access unit the formula is:

5×10^{-3} x internal volume of the service unit or access unit.

14.1.4 Protection against access to hazardous parts

Add the following paragraph:

Service units are tested with the cover opened.

Additional subclause:

14.101 Protection against corrosion by wet screed material

Parts of CTS/CDS intended to be in contact with wet screed material which are made entirely or partially of metal shall have adequate protection against corrosion.

For small fixing devices, such as screws, nuts and the like a coating of grease is deemed to be a sufficient protection against rusting.

Compliance is checked by the following test.

The sample is degreased by immersion in white spirit with a kauri-butanol value of 35 ± 5 or an equivalent degreasing agent for 10 min ± 1 min.

After degreasing the sample is submitted to a test according to IEC 60068-2-60 using test method 1 with test duration of 4 days.

After exposure, the surface shall show no areas of red rust. White rust (zinc oxide) and traces of red rust which are removable by rubbing as well as traces of rust at the surface of cuts, bent edges and welded joints are ignored.

15 Electromagnetic compatibility

This clause of Part 1 is applicable.

Addition:

Documents
Document Sharing Hub

Full document details: IEC 61084-2-2 2017

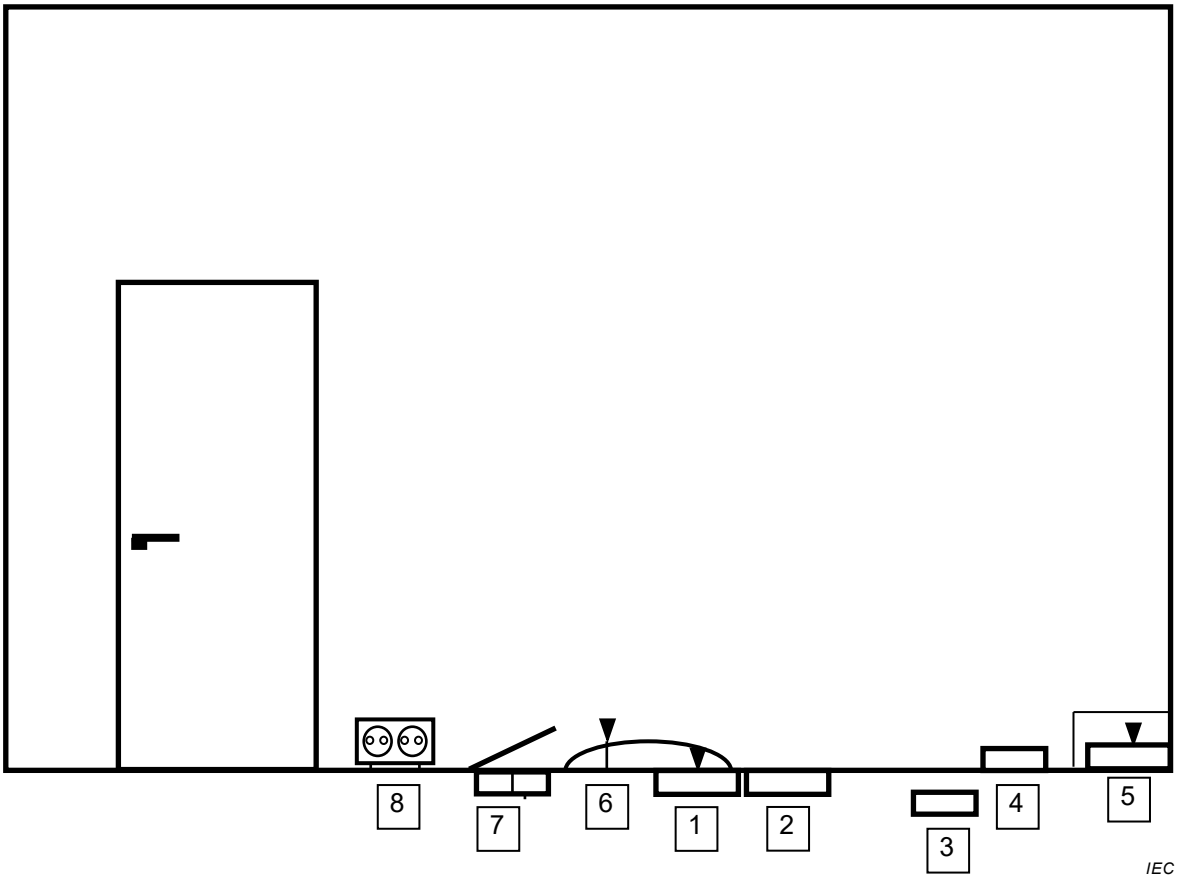

▼ Indicates a removable cover for a CTS

NOTE An explanation of the numbers used in this figure is given in Annex A.

Figure 101 – Types and application of CTS/CDS for underfloor, flushfloor or onfloor installations

Documents
Document Sharing Hub
Full document details: IEC 61084-2-2 2017

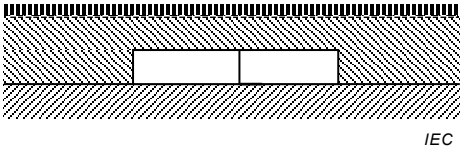

Figure 102a) – Underfloor CDS – Embedded in the floor

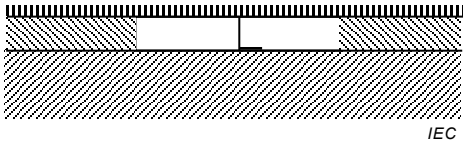

Figure 102b) – Flushfloor CTS/CDS – Installed flush with the upper level of the floor

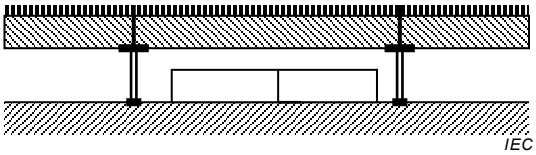

Figure 102c) – Underfloor CTS/CDS – Installed under a raised floor

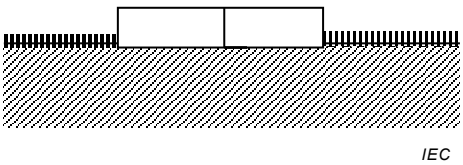

Figure 102d) – Onfloor CTS/CDS – Installed above the upper level of the floor

Figure 102 – Examples of trunking and ducting installations

Documents
Document Sharing Hub
Full document details: IEC 61084-2-2 2017

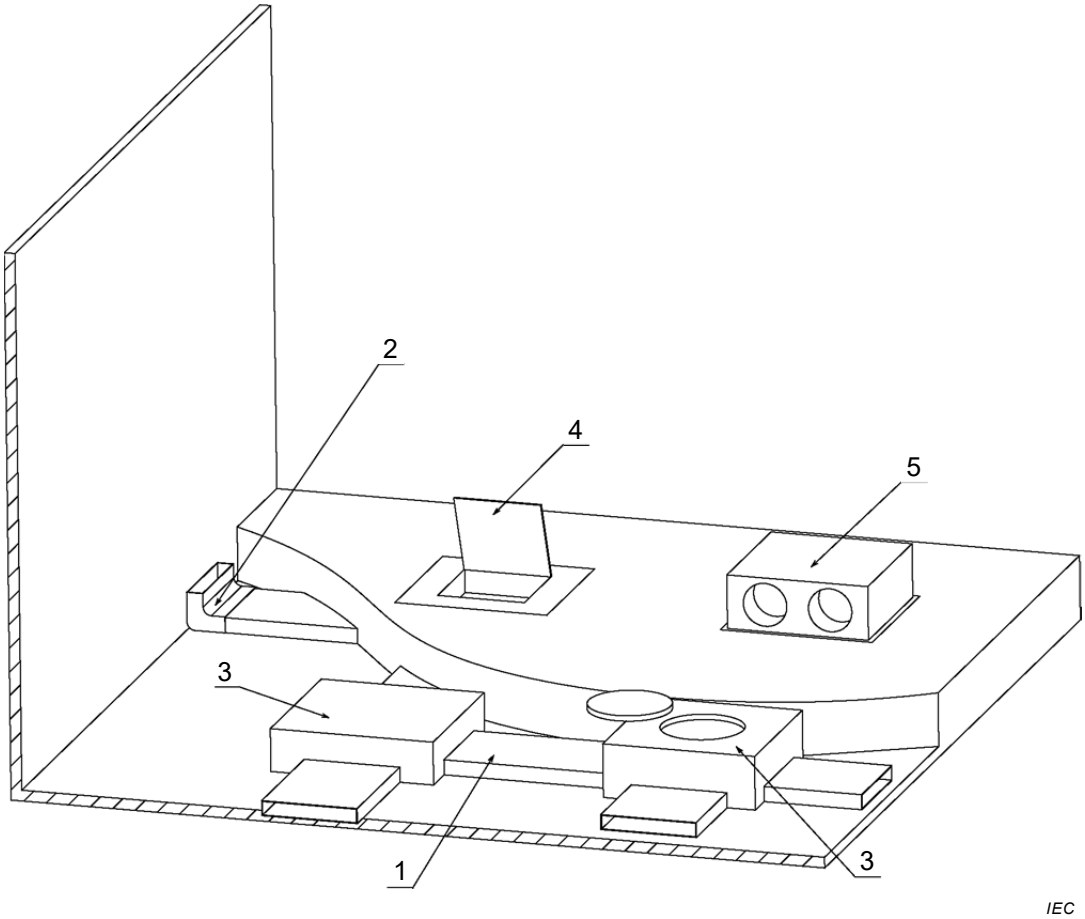

Key

1 ducting length

2 fitting

3 access unit

4 service unit mounted flushfloor

5 service unit mounted onfloor

Figure 103 – Example of underfloor embedded CDS according to 3.101

Documents
Document Sharing Hub
Full document details: IEC 61084-2-2 2017