IEC 61111

Edition 2.0 2009-04

INTERNATIONAL STANDARD

NORME INTERNATIONALE

Live working – Electrical insulating matting

Travaux sous tension – Tapis isolants électriques

IEC 61111:2009

Documents
Document Sharing Hub

Full document details: IEC 61111 2009

THIS PUBLICATION IS COPYRIGHT PROTECTED

Copyright © 2009 IEC, Geneva, Switzerland

All rights reserved. Unless otherwise specified, no part of this publication may be reproduced or utilized in any form or by any means, electronic or mechanical, including photocopying and microfilm, without permission in writing from either IEC or IEC's member National Committee in the country of the requester.
If you have any questions about IEC copyright or have an enquiry about obtaining additional rights to this publication, please contact the address below or your local IEC member National Committee for further information.

Droits de reproduction réservés. Sauf indication contraire, aucune partie de cette publication ne peut être reproduite ni utilisée sous quelque forme que ce soit et par aucun procédé, électronique ou mécanique, y compris la photocopie et les microfilms, sans l'accord écrit de la CEI ou du Comité national de la CEI du pays du demandeur.
Si vous avez des questions sur le copyright de la CEI ou si vous désirez obtenir des droits supplémentaires sur cette publication, utilisez les coordonnées ci-après ou contactez le Comité national de la CEI de votre pays de résidence.

IEC Central Office
3, rue de Varembé
CH-1211 Geneva 20
Switzerland
Email: inmail@iec.ch
Web: www.iec.ch

About the IEC

The International Electrotechnical Commission (IEC) is the leading global organization that prepares and publishes International Standards for all electrical, electronic and related technologies.

About IEC publications

The technical content of IEC publications is kept under constant review by the IEC. Please make sure that you have the latest edition, a corrigenda or an amendment might have been published.

- Catalogue of IEC publications: www.iec.ch/searchpub
The IEC on-line Catalogue enables you to search by a variety of criteria (reference number, text, technical committee,…). It also gives information on projects, withdrawn and replaced publications.
- IEC Just Published: www.iec.ch/online_news/justpub
Stay up to date on all new IEC publications. Just Published details twice a month all new publications released. Available on-line and also by email.
- Electropedia: www.electropedia.org
The world's leading online dictionary of electronic and electrical terms containing more than 20 000 terms and definitions in English and French, with equivalent terms in additional languages. Also known as the International Electrotechnical Vocabulary online.
- Customer Service Centre: www.iec.ch/webstore/custserv
If you wish to give us your feedback on this publication or need further assistance, please visit the Customer Service Centre FAQ or contact us:
Email: csc@iec.ch
Tel.: +41 22 919 02 11
Fax: +41 22 919 03 00

A propos de la CEI

La Commission Electrotechnique Internationale (CEI) est la première organisation mondiale qui élabore et publie des normes internationales pour tout ce qui a trait à l'électricité, à l'électronique et aux technologies apparentées.

A propos des publications CEI

Le contenu technique des publications de la CEI est constamment revu. Veuillez vous assurer que vous possédez l'édition la plus récente, un corrigendum ou amendement peut avoir été publié.

- Catalogue des publications de la CEI: www.iec.ch/searchpub/cur_fut-f.htm
Le Catalogue en-ligne de la CEI vous permet d'effectuer des recherches en utilisant différents critères (numéro de référence, texte, comité d'études,…). Il donne aussi des informations sur les projets et les publications retirées ou remplacées.
- Just Published CEI: www.iec.ch/online_news/justpub
Restez informé sur les nouvelles publications de la CEI. Just Published détaille deux fois par mois les nouvelles publications parues. Disponible en-ligne et aussi par email.
- Electropedia: www.electropedia.org
Le premier dictionnaire en ligne au monde de termes électroniques et électriques. Il contient plus de 20 000 termes et définitions en anglais et en français, ainsi que les termes équivalents dans les langues additionnelles. Egalement appelé Vocabulaire Electrotechnique International en ligne.
- Service Clients: www.iec.ch/webstore/custserv/custserv_entry-f.htm
Si vous désirez nous donner des commentaires sur cette publication ou si vous avez des questions, visitez le FAQ du Service clients ou contactez-nous:
Email: csc@iec.ch
Tél.: +41 22 919 02 11
Fax: +41 22 919 03 00

Documents
Document Sharing Hub

Full document details: IEC 61111 2009

IEC 61111

Edition 2.0 2009-04

INTERNATIONAL STANDARD

NORME INTERNATIONALE

Live working – Electrical insulating matting

Travaux sous tension – Tapis isolants électriques

INTERNATIONAL
ELECTROTECHNICAL
COMMISSION

COMMISSION
ELECTROTECHNIQUE
INTERNATIONALE

PRICE CODE
CODE PRIX V

ICS 13.260; 29.260.99

ISBN 978-2-88910-413-0

® Registered trademark of the International Electrotechnical Commission
Marque déposée de la Commission Electrotechnique Internationale

Documents
Document Sharing Hub

Full document details: IEC 61111 2009

CONTENTS

FOREWORD 4
INTRODUCTION 6
1 Scope 7
2 Normative references 7
3 Terms and definitions 8
4 Requirements 9
4.1 General 9
4.2 Classification 9
4.3 Physical requirements 9
4.3.1 Composition 9
4.3.2 Shape 9
4.3.3 Dimensions and tolerances 9
4.3.4 Workmanship and finish 10
4.4 Mechanical, climatic and environmental requirements 10
4.5 Dielectric requirements 11
4.6 Marking 11
4.7 Packaging 11
4.8 Instructions for use 11
5 Tests 12
5.1 General 12
5.2 Visual inspection and measurements 12
5.2.1 General 12
5.2.2 Classification 12
5.2.3 Composition 12
5.2.4 Dimensions, workmanship and finish 12
5.2.5 Thickness 13
5.3 Marking 13
5.3.1 Visual inspection and measurement 13
5.3.2 Durability of marking 13
5.4 Packaging and instructions for use 13
5.5 Mechanical tests 14
5.5.1 General 14
5.5.2 Mechanical puncture resistance 14
5.5.3 Test for slip resistance 14
5.6 Dielectric tests 15
5.6.1 General 15
5.6.2 Electrodes 16
5.6.3 Test equipment 19
5.6.4 Electrical test procedure 19
5.7 Ageing tests 20
5.8 Thermal tests 21
5.8.1 Flame retardance test 21
5.8.2 Low temperature folding test (except for matting of category C) 21
5.8.3 Extremely low temperature folding test for matting of category C only 22
5.9 Acid resistance 23
5.10 Oil resistance 23

AVA Documents
Document Sharing Hub
Full document details: IEC 61111 2009

6 Conformity assessment of electrical insulating matting having completed the production phase 23
7 Modifications 23
Annex A (informative) Guidelines for the selection of the class of electrical insulating matting in relation to nominal voltage of a system 24
Annex B (informative) In-service care and testing 25
Annex C (normative) Suitable for live working; double triangle (IEC 60417–5216 (2002-10)) 27
Annex D (normative) General type test procedure 28
Annex E (normative) Oil for tests for oil resistance 30
Annex F (normative) Classification of defects and tests to be allocated 31
Bibliography 32

Figure 1 – Test plates and needle for resistance to mechanical puncture 15
Figure 2 – Test set-up for voltage proof test of electrical insulating matting with standard type of electrodes 16
Figure 3 – Test set-up for voltage proof test of electrical insulating matting with alternative type of electrodes 18
Figure 4 – Test set-up for voltage withstand test 19
Figure 5 – Test set-up for low and extremely low temperature folding tests 22

Table 1 – Common lengths and widths for electrical insulating matting 10
Table 2 – Maximum thickness for electrical insulating matting 10
Table 3 – Maximum electrode clearance for proof tests 17
Table 4 – Test voltages 20
Table A.1 – Designation maximum use voltage 24
Table D.1 – List and chronological order of type tests 28
Table E.1 – Characteristics of oil no. 1 30
Table F.1 – Classification of defects and associated requirements and tests 31

Documents
Document Sharing Hub
Full document details: IEC 61111 2009

INTERNATIONAL ELECTROTECHNICAL COMMISSION

LIVE WORKING – ELECTRICAL INSULATING MATTING

FOREWORD

1) The International Electrotechnical Commission (IEC) is a worldwide organization for standardization comprising all national electrotechnical committees (IEC National Committees). The object of IEC is to promote international co-operation on all questions concerning standardization in the electrical and electronic fields. To this end and in addition to other activities, IEC publishes International Standards, Technical Specifications, Technical Reports, Publicly Available Specifications (PAS) and Guides (hereafter referred to as "IEC Publication(s)"). Their preparation is entrusted to technical committees; any IEC National Committee interested in the subject dealt with may participate in this preparatory work. International, governmental and non-governmental organizations liaising with the IEC also participate in this preparation. IEC collaborates closely with the International Organization for Standardization (ISO) in accordance with conditions determined by agreement between the two organizations.
2) The formal decisions or agreements of IEC on technical matters express, as nearly as possible, an international consensus of opinion on the relevant subjects since each technical committee has representation from all interested IEC National Committees.
3) IEC Publications have the form of recommendations for international use and are accepted by IEC National Committees in that sense. While all reasonable efforts are made to ensure that the technical content of IEC Publications is accurate, IEC cannot be held responsible for the way in which they are used or for any misinterpretation by any end user.
4) In order to promote international uniformity, IEC National Committees undertake to apply IEC Publications transparently to the maximum extent possible in their national and regional publications. Any divergence between any IEC Publication and the corresponding national or regional publication shall be clearly indicated in the latter.
5) IEC provides no marking procedure to indicate its approval and cannot be rendered responsible for any equipment declared to be in conformity with an IEC Publication.
6) All users should ensure that they have the latest edition of this publication.
7) No liability shall attach to IEC or its directors, employees, servants or agents including individual experts and members of its technical committees and IEC National Committees for any personal injury, property damage or other damage of any nature whatsoever, whether direct or indirect, or for costs (including legal fees) and expenses arising out of the publication, use of, or reliance upon, this IEC Publication or any other IEC Publications.
8) Attention is drawn to the Normative references cited in this publication. Use of the referenced publications is indispensable for the correct application of this publication.
9) Attention is drawn to the possibility that some of the elements of this IEC Publication may be the subject of patent rights. IEC shall not be held responsible for identifying any or all such patent rights.

International Standard IEC 61111 has been prepared by IEC technical committee 78: Live Working.

This second edition cancels and replaces the first edition, published in 1992, and its Amendment 1 (2002). This edition constitutes a technical revision.

It includes the following significant technical changes with regard to the previous edition:

- general review of the requirements and test provisions;
- modification of the test procedure for slip resistance;
- specification of standard and alternative types of electrodes for the proof test;
- increase of the conditioning time for low temperature folding test to 4 hours;
- modification of the test procedures for low and extremely low temperature by replacing the dielectric proof test by a withstand test in the sanction;
- modification of the test procedures for acid and oil resistance by specifying the use of test pieces and by replacing the dielectric proof test by a withstand test in the sanction;

AVA Documents Document Sharing Hub

Full document details: IEC 61111 2009

- specification of liquid 102 for the oil resistance test and harmonisation of the mechanical test sanction with the acid resistance test;
- preparation of the elements of evaluation of defects, and general application of IEC 61318 Ed.3;
- revision of existing annexes;
- deletion of Annexes D and F, not applicable according to IEC 61318 Ed.3;
- introduction of a new normative Annex F on classification of defects.

The text of this standard is based on the following documents:

FDIS	Report on voting
78/784/FDIS	78/798/RVD

Full information on the voting for the approval of this standard can be found in the report on voting indicated in the above table.

This publication has been drafted in accordance with the ISO/IEC Directives, Part 2.

The committee has decided that the contents of this publication will remain unchanged until the maintenance result date indicated on the IEC web site under "http://webstore.iec.ch" in the data related to the specific publication. At this date, the publication will be

- reconfirmed,
- withdrawn,
- replaced by a revised edition, or
- amended.

Documents
Document Sharing Hub

Full document details: IEC 61111 2009

INTRODUCTION

This International Standard has been prepared according to the requirements of IEC 61477 where applicable.

The product covered by this standard may have an impact on the environment during some or all stages of its life cycle. These impacts can range from slight to significant, be of short-term or long-term, and occur at the global, regional or local level.

Except for a disposal statement in the instructions for use, this standard does not include requirements and test provisions for the manufacturers of the product, or recommendations to the users of the product for environmental improvement. However, all parties intervening in its design, manufacture, packaging, distribution, use, maintenance, repair, reuse, recovery and disposal are invited to take account of environmental considerations.

Documents
Document Sharing Hub

Full document details: IEC 61111 2009

LIVE WORKING – ELECTRICAL INSULATING MATTING

1 Scope

This International Standard is applicable to electrical insulating matting made of elastomer for use as a floor covering for the electrical protection of workers on electrical installations.

NOTE 1 For a.c. electrical classification, as well as d.c. use, see 4.2.

NOTE 2 This document gives a.c. test provisions. There is limited history for use in d.c. applications.

NOTE 3 See Annex A for suggested maximum voltage use.

2 Normative references

The following referenced documents are indispensable for the application of this document. For dated references, only the edition cited applies. For undated references, the latest edition of the referenced document (including any amendments) applies.

IEC 60060-1, *High-voltage test techniques – Part 1: General definitions and test requirements*

IEC 60060-2, *High-voltage test techniques – Part 2: Measuring systems*

IEC 60068-1, *Environmental testing – Part 1: General and guidance*

IEC 60212:1971, *Standard conditions for use prior to and during the testing of solid electrical insulating materials*

IEC 60417, *Graphical symbols for use on equipment*

IEC 61318, *Live working – Conformity assessment applicable to tools, devices and equipment*

IEC 61477, *Live working – Minimum requirements for the utilization of tools, devices and equipment*

ISO 2592, *Determination of flash and fire points – Cleveland open cup method*

ISO 2977, *Petroleum products and hydrocarbon solvents – Determination of aniline point and mixed aniline point*

ISO 3104, *Petroleum products – Transparent and opaque liquids – Determination of kinematic viscosity and calculation of dynamic viscosity*

ISO 5904:1981, *Gymnastic equipment – Landing mats and surfaces for floor exercises – Determination of resistance to slipping*

ASTM D 3767:2003 (reapproved 2008), *Standard practice for rubber – Measurement of dimensions*

Documents
Document Sharing Hub

Full document details: IEC 61111 2009

3 Terms and definitions

For the purposes of this document, the terms and definitions given in IEC 61318 and the following apply.

3.1
disruptive discharge
passage of an arc following dielectric breakdown

NOTE 1 The term “sparkover” (in French “amorçage”) is used when a disruptive discharge occurs in a gaseous or liquid dielectric.

NOTE 2 The term “flashover” (in French “contournement”) is used when a disruptive discharge occurs at least partly along the surface of a solid dielectric surrounded by a gaseous or liquid medium.

NOTE 3 The term “puncture” (in French “perforation”) is used when a disruptive discharge occurs through a solid dielectric producing permanent damage.

[IEV 651-01-18 and definition 2.7.7 of IEC 60743, modified]

3.2
elastomer
macromolecular material which returns rapidly to its initial dimensions and shape after substantial deformation by a weak stress and release of the stress

NOTE 1 The definition applies under room temperature test conditions.

NOTE 2 Elastomer is a generic term that includes rubber, latex and elastomeric compounds that may be natural or synthetic or a mixture or a combination of both. It also includes thermoplastic elastomer (TPE) material.

[ISO 472 modified]

3.3
electrical insulating matting
flexible sheeting made of elastomer, used to cover the surface on which the worker is standing (the potential of this surface is usually that of earth)

NOTE The sheeting is either of various definite shapes or in roll allowing the workers to custom-cut the material to fit the application.

[Definition 5.2.3 of IEC 60743 and IEV 651-04-07, modified]

3.4
nominal voltage (of a system)
suitable approximate value of voltage used to designate or identify a system

[IEV 601-01-21]

3.5
proof test voltage
specified voltage that is applied to a device or test piece for the time defined under specified conditions to assure that the electrical strength of the insulation is above a specified value

3.6
withstand test voltage
voltage that a test piece is required to withstand without disruptive discharge or other electric failure when voltage is applied under specified conditions

Documents
Document Sharing Hub
Full document details: IEC 61111 2009

4 Requirements

4.1 General

Electrical insulating matting shall be designed and manufactured to contribute to the safety of the users provided they are used by skilled persons, in accordance with safe methods of work and the instructions for use.

4.2 Classification

The electrical insulating matting covered by this standard shall be designated as follows:

– by electrical class: as class 0, class 1, class 2, class 3 and class 4;

– by adding the suffix “C” to the class designation, in case of category C matting (resistance to extremely low temperature).

Guidance for the selection of class (a.c. and d.c.) is given in Annex A.

Guidance as to temperature range at which electrical insulating matting can be used is given in Annex B.

4.3 Physical requirements

4.3.1 Composition

The electrical insulating matting shall be manufactured of elastomer.

Both sides of the electrical insulating matting shall be slip resistant. The slip resistance may be achieved with surface such as corrugated or diamond design.

Any insert shall not affect adversely the dielectric characteristics of the electrical insulating matting.

4.3.2 Shape

There is no requirement for the shape of the electrical insulating matting.

Electrical insulating matting may be either of various shapes or in rolls to be cut for individual applications.

4.3.3 Dimensions and tolerances

4.3.3.1 Length and width

Electrical insulating matting shall not have length and width less than 600 mm.

Manufacturers shall provide matting length and width. These dimensions for each matting shall be within a tolerance of ± 2 % of the stated dimensions.

Common lengths and widths for electrical insulating matting are indicated in Table 1.

Documents
Document Sharing Hub

Full document details: IEC 61111 2009

Table 1 – Common lengths and widths for electrical insulating matting

Matting in various shapes		Matting in rolls
Length mm	**Width** mm	**Width** mm
1 000 1 000 1 000	600 1 000 2 000	610 760 915 1 220

4.3.3.2 Thickness

4.3.3.2.1 Maximum thickness

The maximum thickness of matting shall be as given in Table 2 in order to obtain appropriate flexibility.

Table 2 – Maximum thickness for electrical insulating matting

Class	mm
0	6,0
1	6,0
2	8,0
3	11,0
4	14,0

When corrugations or diamonds are present, measurements shall be made over the corrugations or diamonds. The corrugations shall not be more than 3 mm deep. The diamonds shall not be higher than 2 mm.

4.3.3.2.2 Minimum thickness

The minimum thickness shall be determined only by the ability to pass the tests defined in Clause 5.

4.3.4 Workmanship and finish

Electrical insulating matting shall be free from harmful physical irregularities on both surfaces that can be detected by thorough test and/or inspection.

Harmful physical irregularities defined as any feature that disrupts the uniform, smooth surface contour, such as pinholes, cracks, blisters, cuts, conductive embedded foreign matter, creases, pinch marks, voids (entrapped air), prominent ripples and prominent mould marks shall not be acceptable.

Non-harmful physical irregularities defined as surface irregularities present on either surface of the matting due to imperfections on forms or moulds or other imperfections inherent to the manufacturing process shall be acceptable. These irregularities appear as mould marks that look like cuts, even though they are actually a raised ridge of elastomer, indentations, or protuberances.

4.4 Mechanical, climatic and environmental requirements

Electrical insulating matting shall support the mechanical, climatic and environmental stresses occurring during normal working conditions.

All electrical insulating matting shall be resistant to acid, oil, and low temperature and Category C shall be resistant to extremely low temperature.

AVA Documents
Document Sharing Hub

Full document details: IEC 61111 2009

4.5 Dielectric requirements

Electrical insulating matting shall be capable of withstanding the corresponding electrical stresses according to its electrical class.

4.6 Marking

Electrical insulating matting complying with the requirements of this standard shall be marked on the product with the following items of marking:

- name, trademark or identification of the manufacturer;
- symbol IEC 60417-5216 (2002-10) – Suitable for live working; double triangle (see Annex C);

  NOTE The exact ratio of the height of the figure to the base of the triangle is 1,43. For the purpose of convenience, this ratio can be between the values of 1,4 and 1,5.
- number of the relevant IEC standard immediately adjacent to the symbol, (IEC 61111);
- month and year of manufacture;
- category if applicable;
- class designation.

In the case of matting in rolls, these items of marking shall appear at least every metre.

Any additional item of marking shall be subject to agreement between the manufacturer and the customer.

The marking shall be clearly visible, durable and shall not impair the quality of the electrical insulating matting.

When a colour code is used, the colour of the symbol (double triangle) shall correspond to the following code:

Class 0 – red

Class 1 – white

Class 2 – yellow

Class 3 – green

Class 4 – orange

4.7 Packaging

Electrical insulating matting shall be packaged in containers or packages of sufficient strength to properly protect the electrical insulating matting from damage during delivery and normal storage and transportation before first use.

NOTE It is the responsibility of the user to provide protective packaging (ex: a specific bag) if cut portions are to be reused.

The outside of the container or package shall be marked with at least the following information:

- number of the relevant IEC standard immediately adjacent to the symbol with year of publication (4 digits), (IEC 61111:2009);
- name, trademark, or identification of the manufacturer.

4.8 Instructions for use

The manufacturer shall provide written instructions for use with each packaging of electrical insulating matting covered by this standard.

AVA Documents
Document Sharing Hub

Full document details: IEC 61111 2009

These instructions shall be prepared in accordance with the general provisions of IEC 61477.

The instructions for use shall include as a minimum, information such as storage, handling, disposal and periodic testing.

The instructions for use shall inform the users about critical hazards the manufacturer is aware of and offer relevant recommendations, but without intruding into the area of work procedures (for example, recommendation in case of overlapping matting).

5 Tests

5.1 General

The present standard provides testing provisions to demonstrate compliance of the product to the requirements of Clause 4. These testing provisions are primarily intended to be used as type tests for validation of the design input. Where relevant, alternative means (calculation, examination, tests, etc.), are specified within the test subclauses for the purpose of electrical insulating matting having completed the production phase.

The allocation of the electrical insulating matting into various test groups, the quantity required and the order in which the type tests are carried out are given in Annex D.

The test location conditions shall be in accordance with IEC 60068-1:

– ambient temperature: 15 °C to 35 °C;
– relative humidity: 45 % to 75 %;
– atmospheric pressure: 86 kPa to 106 kPa.

For type tests, unless otherwise specified, electrical insulating matting or test pieces shall be conditioned for a period of 2 h ± 0,5 h at a temperature of 23 °C ± 2 °C and relative humidity of 50 % ± 5% according to IEC 60212 standard atmosphere B.

Unless otherwise specified, the tolerances for any measured value shall be ± 5 %.

5.2 Visual inspection and measurements

5.2.1 General

Visual inspection shall be carried out by a person with normal or corrected vision without additional magnification.

5.2.2 Classification

It shall be checked by visual inspection that the requirements of 4.2 are fulfilled.

5.2.3 Composition

It shall be checked by visual inspection that the requirements of 4.3.1 are fulfilled.

5.2.4 Dimensions, workmanship and finish

The product length and width as provided by the manufacturer shall be verified with electrical insulating matting in a flattened condition. The test shall be considered as passed if the requirement for the minimum dimensioning is fulfilled and the tolerances are in accordance with 4.3.3.1.

AVA Documents
Document Sharing Hub

Full document details: IEC 61111 2009

The workmanship and finish shall be verified by visual inspection. In case of roll, a length of 2 m shall be submitted to inspection.

The inspection shall be considered as passed if the requirements of 4.3.4 are satisfied. Non-harmful physical irregularities are defined as surface irregularities present on either surface of the matting due to imperfections on forms or moulds or other imperfections inherent to the manufacturing process and are acceptable provided that:

a) the thickness at any irregularity conforms to the thickness requirements. Surface design to improve slip resistance shall not be considered as irregularities;
b) the indentations, protuberances or mould marks tend to blend into a smooth slope upon stretching of the material.

5.2.5 Thickness

Thickness measurements shall be made at five or more points approximately uniformly distributed over the total area of the electrical insulating matting. In case of a roll, a length of 2 m shall be submitted to test.

Measurements shall be made with a commercial device designed for use on flexible materials and that measures the maximum thickness with an accuracy of 0,03 mm. Sufficient support shall be given to the matting so that it will present an unstressed flat surface at the measurement point.

According to ASTM D3767, the pressure exerted by the presser foot of the measuring device shall be (22 ± 5) kPa for matting material having a hardness equal to or greater than 35 IRHD, and (10 ± 2) kPa for matting material having a hardness less than 35 IRHD.

The test shall be considered as passed if the requirements of 4.3.3.2.1 are fulfilled.

5.3 Marking

5.3.1 Visual inspection and measurement

The marking requirements of 4.6 shall be verified by visual inspection. In case of a roll, a length of 2 m shall be submitted to test.

5.3.2 Durability of marking

The durability of the items marked on the electrical insulating matting shall be checked by rubbing vigorously for 15 s with a piece of lint-free cloth soaked in soapy water and then rubbing it for a further 15 s with a piece of lint-free cloth soaked in isopropanol (CH_3-CH(OH)-CH_3).

NOTE It is the employer's duty to ensure that any relevant legislation and any specific safety instructions regarding the use of this chemical are fully observed.

The test shall be considered as passed if the items of marking remain legible and the letters do not smear.

For marking produced by an engraving or moulding process the test for durability is not needed.

5.4 Packaging and instructions for use

The packaging and complete supply of the information required in 4.7 and 4.8 shall be verified by visual inspection.

Documents
Document Sharing Hub
Full document details: IEC 61111 2009

5.5 Mechanical tests

5.5.1 General

All mechanical tests shall be performed on test pieces which have been conditioned by storing each separately in a flat, horizontal position for at least 24 h at a temperature of 23 °C ± 2 °C and relative humidity of 50 % ± 5 % according to IEC 60212 – Standard atmosphere B. In the case of matting in rolls, the material taken from the roll needed to prepare the test pieces shall be cut before conditioning.

NOTE The properties of vulcanized elastomeric material change continuously with time, these changes being particularly rapid in the period immediately following vulcanization.

5.5.2 Mechanical puncture resistance

This test shall be carried out on both sides of the matting.

Two circular test pieces 50 mm in diameter shall be cut from the electrical insulating matting and each shall be clamped between two flat 50 mm diameter test plates such that one test piece is perforated from one side and the other test piece is perforated from the other side. The top plate shall have a circular opening 6 mm in diameter and the bottom plate a 25 mm diameter circular opening. The edges of both openings shall be rounded to a radius of 0,8 mm (see Figure 1).

A needle shall be produced from a 5 mm diameter metallic rod and one end shall be machined to produce a taper with an included angle of 12° and with the tip rounded to a radius of 0,8 mm (see Figure 1). The needle shall be clean at time of use.

The needle shall be positioned perpendicularly above the test piece (clamped between the plates) and shall be driven into and through the specimen. The rate of traverse shall be 500 mm/min ± 50 mm/min. The force required to perform the puncture shall be measured.

The test shall be considered as passed if the puncture resistance is greater than 70 N.

5.5.3 Test for slip resistance

The test shall be performed according to ISO 5904 with the following provisions:

– the test shall be carried out on a test piece of insulating electrical matting of 600 mm × 600 mm;
– the test shall be carried out along both directions on each side of the test piece;
– before testing, both surfaces of the test piece shall be cleaned with isopropanol and allowed to dry completely before continuing the test.

The cylindrical friction piece specified in ISO 5904 shall be replaced by a test cube specified as follows:

– bearing-surface area after rounding the edges: 100 mm × 100 mm ± 0,5 mm;
– material of the bearing-surface area: stainless steel for general use (such as martensitic), with a minimum chromium (Cr) content of 12% (to avoid oxidation);
– surface texture of the bearing-surface area: roughness average Ra = 0,8 µm;
– roundness of the edges at right angles to tensile direction: r = 2 mm;
– weight of the total test cube: 5 kg ± 5 g.

The test shall be considered as passed if the average tensile force F for each side and direction of the test piece is higher than 50 N.

Documents
Document Sharing Hub
Full document details: IEC 61111 2009

Dimensions in millimetres except for angles

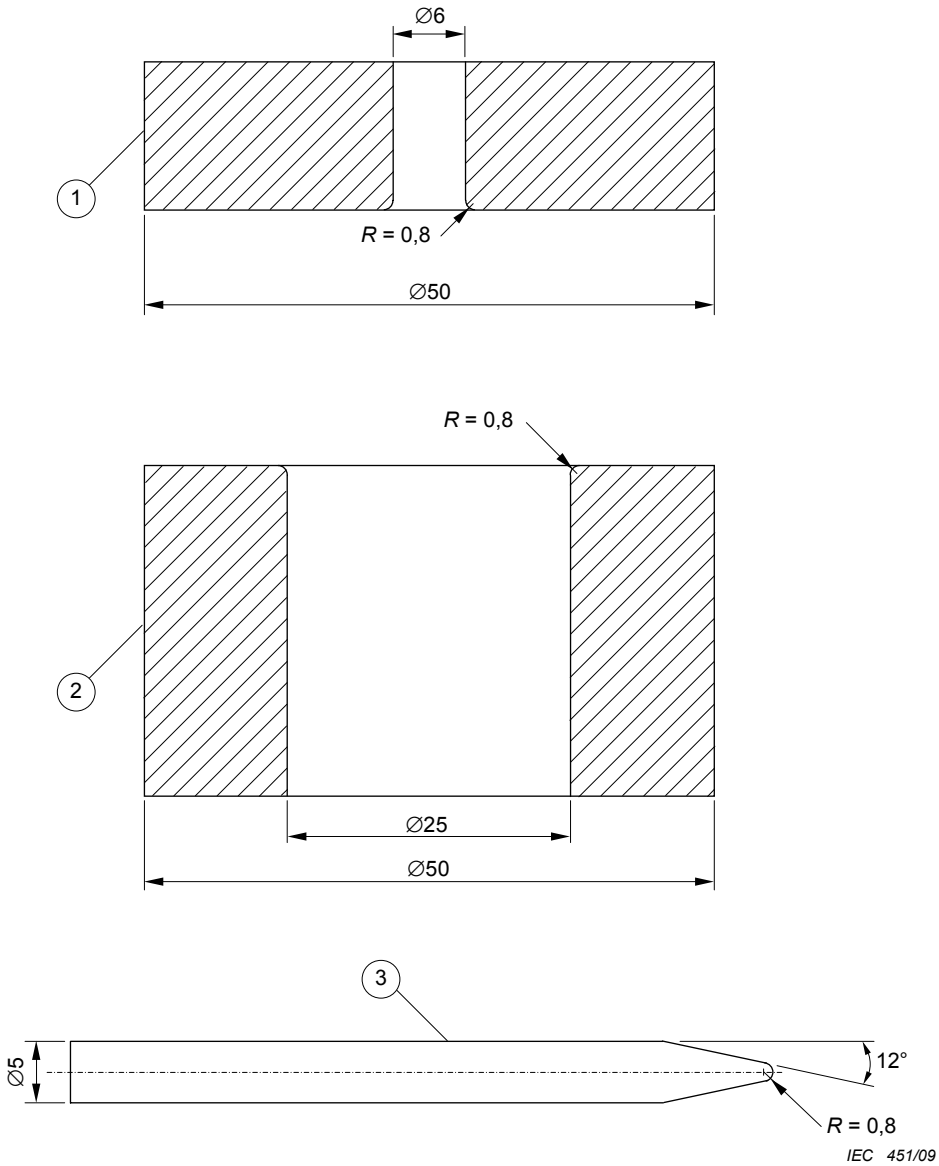

Key

1 Top plate

2 Bottom plate

3 Needle

Figure 1 – Test plates and needle for resistance to mechanical puncture

5.6 Dielectric tests

5.6.1 General

Dielectric testing shall be carried out using a. c. voltage. The peak (crest) or r.m.s. value of the a.c. voltage shall be measured with a maximum error according to IEC 60060-2.

The matting, including test pieces from rolls, shall be conditioned for moisture absorption by total immersion in a bath of tap water with a resistivity of (100 ± 15) Ω·m at room temperature

AVA Documents Document Sharing Hub

Full document details: IEC 61111 2009

(as specified in 5.1) for a period of 16 h ± 0,5 h. After the conditioning they shall be wiped dry and immediately submitted to the dielectric test.

NOTE Insulating compounds used in the finishing process (e.g. paraffin and talcum powder) should be removed with suitable solvents before the test is commenced.

5.6.2 Electrodes

5.6.2.1 General

Electrodes shall be of such design so as to apply the electrical stress uniformly over the test area without producing corona at any point or mechanical strain in the material.

The different types of electrodes to be employed are described as follows.

5.6.2.2 For voltage proof test

5.6.2.2.1 Standard type of electrodes

Unless flashover happens during the conduct of the test, this type of electrodes shall be used for all classes of matting.

The test electrodes shall be conductive plates, having smoothly rounded edges and corners, of a size that covers the maximum area of the electrical insulating matting or test piece, taking into account the maximum clearance given in Table 3 (see Figure 2).

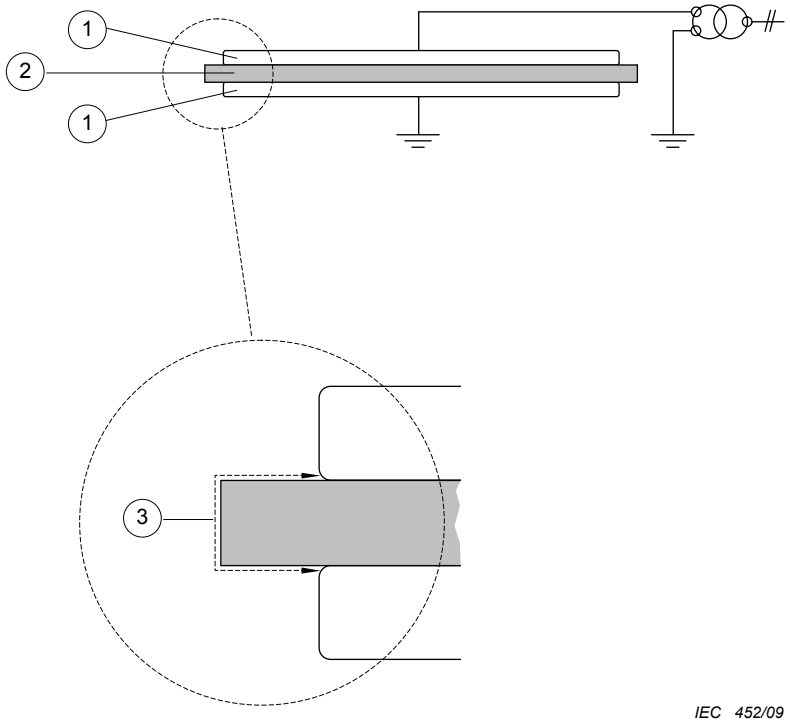

Key

1 Conductive plate

2 Matting or test piece

3 Electrode clearance

Figure 2 – Test set-up for voltage proof test of electrical insulating matting with standard type of electrodes

AVA Documents Document Sharing Hub

Full document details: IEC 61111 2009

Table 3 – Maximum electrode clearance for proof tests

Class of electrical insulating matting	Clearance for tests mm
0	80
1	80
2	150
3	200
4	300

In case of tests on rolls, the electrodes shall be able to contain at least a length of electrical insulating matting equal to its width.

The electrodes shall be of such dimensions that the clearances specified in Table 3 are not exceeded.

Clearance is defined as the distance between the upper electrode and the lower electrode around the edge of the matting or test piece.

5.6.2.2.2 Alternative type of electrodes in case of flashover with the standard type

If flashover happens during the conduct of the test with the standard type of electrodes of 5.6.2.2.1, the following type of electrodes shall be used.

A 1 270 mm × 1 270 mm sheet of insulating material 3 mm to 5 mm thick, which has a 762 mm × 762 mm opening in the centre, shall be placed on an earthed metal plate. This mask, which has a "picture frame" appearance, shall have the opening filled with a conductive material of such thickness as to bring the earth electrode to approximately the same level as the mask in order to maintain direct contact with the matting or test piece.

The matting or test piece shall be placed over the mask.

A rectangular metal plate, 762 mm × 762 mm and approximately 5 mm thick, having smoothly rounded edges and corners, shall be placed on top of the matting or test piece. This top plate shall then be energized with the test voltage (see Figure 3).

NOTE 1 This arrangement will test a 762 mm × 762 mm area of a 914 mm × 914 mm matting at 40 kV a.c. as the mask prevents flashover.

NOTE 2 Other mask dimensions may be used according to the dimensions of the matting.

Other electrode designs may be used to achieve the same results.

Documents
Document Sharing Hub

Full document details: IEC 61111 2009

Dimensions in millimetres

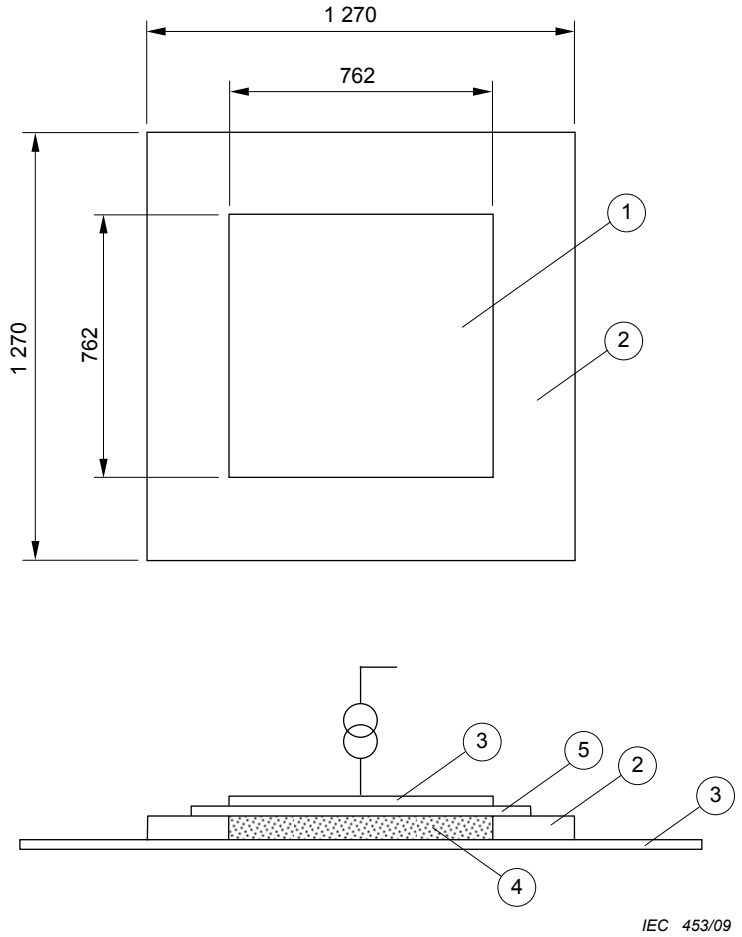

Key

1	Hole	4	Conductive material
2	Plexiglass mask (thickness 3 mm to 5 mm)	5	Matting or test piece (1 000 mm × 1 000 mm)
3	Metal plate		

Figure 3 – Test set-up for voltage proof test of electrical insulating matting with alternative type of electrodes

5.6.2.3 For voltage withstand test

The electrodes shall consist of two metal cylinders with the sharp edges removed to give a radius of 3 mm. One electrode shall be 25 mm in diameter and approximately 25 mm long. The other electrode shall be 75 mm in diameter and approximately 15 mm long. These electrodes shall be arranged coaxially as in Figure 4.

Documents
Document Sharing Hub
Full document details: IEC 61111 2009

Dimensions in millimetres

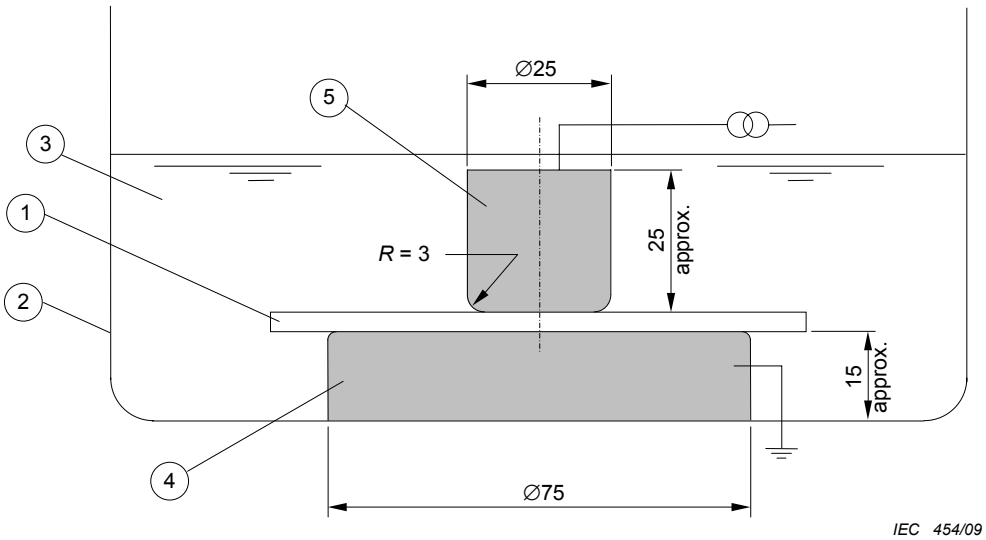

Key

1	Test piece	4	Metal base
2	Tank	5	Metal
3	Insulating liquid		

Figure 4 – Test set-up for voltage withstand test

5.6.3 Test equipment

The test equipment used shall be capable of supplying an essentially stepless and continuously variable test voltage. Motor-driven regulating equipment is convenient and tends to provide uniform rate-of-rise to the test voltage. The test equipment shall be protected by an automatic circuit-breaking device designed to open promptly on the current produced by failure of the matting or test piece.

5.6.4 Electrical test procedure

5.6.4.1 Test equipment

The test voltage shall be applied according to IEC 60060-1 and the measuring equipment shall comply with IEC 60060-2.

5.6.4.2 Proof test procedure

5.6.4.2.1 Type test

Electrical insulating matting in plane form shall be tested as received, without modification. In the case of electrical insulating matting in rolls, having a width equal to or larger than 1 000 mm, the minimum size of each test piece shall be 1 000 mm × 1 000 mm. For rolls having a width less than 1 000 mm, the test piece shall have the length equal to the width.

The electrical insulating matting or test piece shall be given a voltage test as specified in Table 4 using electrodes as specified in 5.6.2.2. The voltage shall be initially applied at a low value and gradually increased at a constant rate-of-rise of approximately 1 000 V/s until the

Documents
Document Sharing Hub
Full document details: IEC 61111 2009