IEC 61158-5-4

Edition 4.0 2023-03

INTERNATIONAL STANDARD

NORME INTERNATIONALE

Industrial communication networks – Fieldbus specifications – Part 5-4: Application layer service definition – Type 4 elements

Réseaux de communication industriels – Spécifications des bus de terrain – Partie 5-4: Définition des services de la couche application – Éléments de type 4

IEC 61158-5-4:2023-03(en-fr)

Documents
Document Sharing Hub
Full document details: IEC 61158-5-4-2023

THIS PUBLICATION IS COPYRIGHT PROTECTED
Copyright © 2023 IEC, Geneva, Switzerland

All rights reserved. Unless otherwise specified, no part of this publication may be reproduced or utilized in any form or by any means, electronic or mechanical, including photocopying and microfilm, without permission in writing from either IEC or IEC's member National Committee in the country of the requester. If you have any questions about IEC copyright or have an enquiry about obtaining additional rights to this publication, please contact the address below or your local IEC member National Committee for further information.

Droits de reproduction réservés. Sauf indication contraire, aucune partie de cette publication ne peut être reproduite ni utilisée sous quelque forme que ce soit et par aucun procédé, électronique ou mécanique, y compris la photocopie et les microfilms, sans l'accord écrit de l'IEC ou du Comité national de l'IEC du pays du demandeur. Si vous avez des questions sur le copyright de l'IEC ou si vous désirez obtenir des droits supplémentaires sur cette publication, utilisez les coordonnées ci-après ou contactez le Comité national de l'IEC de votre pays de résidence.

IEC Secretariat
3, rue de Varembé
CH-1211 Geneva 20
Switzerland

Tel.: +41 22 919 02 11
info@iec.ch
www.iec.ch

About the IEC
The International Electrotechnical Commission (IEC) is the leading global organization that prepares and publishes International Standards for all electrical, electronic and related technologies.

About IEC publications
The technical content of IEC publications is kept under constant review by the IEC. Please make sure that you have the latest edition, a corrigendum or an amendment might have been published.

IEC publications search - webstore.iec.ch/advsearchform
The advanced search enables to find IEC publications by a variety of criteria (reference number, text, technical committee, …). It also gives information on projects, replaced and withdrawn publications.

IEC Just Published - webstore.iec.ch/justpublished
Stay up to date on all new IEC publications. Just Published details all new publications released. Available online and once a month by email.

IEC Customer Service Centre - webstore.iec.ch/csc
If you wish to give us your feedback on this publication or need further assistance, please contact the Customer Service Centre: sales@iec.ch.

IEC Products & Services Portal - products.iec.ch
Discover our powerful search engine and read freely all the publications previews. With a subscription you will always have access to up to date content tailored to your needs.

Electropedia - www.electropedia.org
The world's leading online dictionary on electrotechnology, containing more than 22 300 terminological entries in English and French, with equivalent terms in 19 additional languages. Also known as the International Electrotechnical Vocabulary (IEV) online.

A propos de l'IEC
La Commission Electrotechnique Internationale (IEC) est la première organisation mondiale qui élabore et publie des Normes internationales pour tout ce qui a trait à l'électricité, à l'électronique et aux technologies apparentées.

A propos des publications IEC
Le contenu technique des publications IEC est constamment revu. Veuillez vous assurer que vous possédez l'édition la plus récente, un corrigendum ou amendement peut avoir été publié.

Recherche de publications IEC - webstore.iec.ch/advsearchform
La recherche avancée permet de trouver des publications IEC en utilisant différents critères (numéro de référence, texte, comité d'études, …). Elle donne aussi des informations sur les projets et les publications remplacées ou retirées.

IEC Just Published - webstore.iec.ch/justpublished
Restez informé sur les nouvelles publications IEC. Just Published détaille les nouvelles publications parues. Disponible en ligne et une fois par mois par email.

Service Clients - webstore.iec.ch/csc
Si vous désirez nous donner des commentaires sur cette publication ou si vous avez des questions contactez-nous: sales@iec.ch.

IEC Products & Services Portal - products.iec.ch
Découvrez notre puissant moteur de recherche et consultez gratuitement tous les aperçus des publications. Avec un abonnement, vous aurez toujours accès à un contenu à jour adapté à vos besoins.

Electropedia - www.electropedia.org
Le premier dictionnaire d'électrotechnologie en ligne au monde, avec plus de 22 300 articles terminologiques en anglais et en français, ainsi que les termes équivalents dans 19 langues additionnelles. Egalement appelé Vocabulaire Electrotechnique International (IEV) en ligne.

AVA Documents
Document Sharing Hub

Full document details: IEC 61158-5-4-2023

IEC 61158-5-4

Edition 4.0 2023-03

INTERNATIONAL STANDARD

NORME INTERNATIONALE

Industrial communication networks – Fieldbus specifications – Part 5-4: Application layer service definition – Type 4 elements

Réseaux de communication industriels – Spécifications des bus de terrain – Partie 5-4: Définition des services de la couche application – Éléments de type 4

INTERNATIONAL
ELECTROTECHNICAL
COMMISSION

COMMISSION
ELECTROTECHNIQUE
INTERNATIONALE

ICS 25.040.40, 35.100.70, 35.110

ISBN 978-2-8322-7686-0

Warning! Make sure that you obtained this publication from an authorized distributor.
Attention! Veuillez vous assurer que vous avez obtenu cette publication via un distributeur agréé.

® Registered trademark of the International Electrotechnical Commission
Marque déposée de la Commission Electrotechnique Internationale

Documents
Document Sharing Hub

Full document details: IEC 61158-5-4-2023

CONTENTS

FOREWORD 4
INTRODUCTION 6
1 Scope 7
1.1 General 7
1.2 Specifications 8
1.3 Conformance 8
2 Normative references 8
3 Terms, definitions, symbols, abbreviated terms and conventions 9
3.1 ISO/IEC 7498-1 terms 9
3.2 ISO/IEC 8822 terms 9
3.3 ISO/IEC 9545 terms 10
3.4 ISO/IEC 8824-1 terms 10
3.5 Fieldbus data-link layer terms 10
3.6 Fieldbus application layer specific definitions 10
3.7 Abbreviations and symbols 16
3.8 Conventions 17
3.8.1 Overview 17
3.8.2 General conventions 18
3.8.3 Conventions for class definitions 18
3.8.4 Conventions for service definitions 19
4 Concepts 20
4.1 Overview 20
4.2 Architectural relationships 21
4.2.1 Relationship to the Application Layer of the OSI basic reference model 21
4.2.2 Relationships to other fieldbus entities 21
4.3 Fieldbus Application Layer structure 23
4.3.1 Overview 23
4.3.2 Fundamental concepts 23
4.3.3 Fieldbus application processes 23
4.3.4 Application process objects 27
4.3.5 Application entities 29
4.3.6 Fieldbus application service elements 30
4.3.7 Application relationships 33
4.4 Fieldbus Application Layer naming and addressing 35
4.4.1 General 35
4.4.2 Identifying objects accessed through the FAL 35
4.4.3 Addressing APs accessed through the FAL 36
4.5 Architecture summary 36
4.6 FAL service procedures 36
4.6.1 FAL confirmed service procedures 36
4.6.2 FAL unconfirmed service procedures 37
4.7 Common FAL attributes 37
4.8 Common FAL service parameters 38
4.9 APDU size 39
5 Type 4 communication model specification 39
5.1 Concepts 39

AVA Documents
Document Sharing Hub
Full document details: IEC 61158-5-4-2023

5.1.1 Overview ... 39
5.1.2 Application entities ... 39
5.1.3 Gateway and routing ... 41
5.1.4 Architecture summary ... 42
5.1.5 FAL service procedures and time sequence diagrams ... 43
5.2 Variable ASE ... 45
5.2.1 Variable types ... 45
5.2.2 Variable model class specification ... 47
5.2.3 Basic variable type specifications ... 48
5.2.4 Constructed variable type specifications ... 53
5.2.5 Route endpoint ASE ... 57
5.2.6 Route endpoint ASE service specification ... 60
5.3 Application relationship ASE ... 64
5.3.1 Overview ... 64
5.3.2 Application relationship class specification ... 64
5.3.3 Application relationship ASE service specifications ... 66
Bibliography ... 71

Figure 1 – Relationship to the OSI basic reference model ... 21
Figure 2 – Architectural positioning of the fieldbus Application Layer ... 22
Figure 3 – Client/server interactions ... 24
Figure 4 – Pull model interactions ... 25
Figure 5 – Push model interactions ... 26
Figure 6 – APOs services conveyed by the FAL ... 28
Figure 7 – Application entity structure ... 29
Figure 8 – Example FAL ASEs ... 31
Figure 9 – FAL management of objects ... 31
Figure 10 – ASE service conveyance ... 32
Figure 11 – Defined and established AREPs ... 35
Figure 12 – FAL architectural components ... 36
Figure 13 – FAL AE ... 40
Figure 14 – Summary of the FAL architecture ... 42
Figure 15 – FAL service procedure overview ... 43
Figure 16 – Time sequence diagram for the confirmed services ... 44
Figure 17 – Time sequence diagram for unconfirmed services ... 45

Table 1 – REQUEST service parameters ... 60
Table 2 – RESPONSE service parameters ... 61
Table 3 – Error codes by source ... 62
Table 4 – Reserve REP service parameters ... 62
Table 5 – Free AREP service parameters ... 63
Table 6 – Get REP attribute service parameters ... 63
Table 7 – Set REP attribute service parameters ... 64
Table 8 – AR send service parameters ... 68
Table 9 – AR acknowledge service parameters ... 68
Table 10 – AR get attributes service parameters ... 69
Table 11 – AR set attributes service parameters ... 69

Documents
Document Sharing Hub
Full document details: IEC 61158-5-4-2023

INTERNATIONAL ELECTROTECHNICAL COMMISSION

INDUSTRIAL COMMUNICATION NETWORKS – FIELDBUS SPECIFICATIONS –

Part 5-4: Application layer service definition – Type 4 elements

FOREWORD

1) The International Electrotechnical Commission (IEC) is a worldwide organization for standardization comprising all national electrotechnical committees (IEC National Committees). The object of IEC is to promote international co-operation on all questions concerning standardization in the electrical and electronic fields. To this end and in addition to other activities, IEC publishes International Standards, Technical Specifications, Technical Reports, Publicly Available Specifications (PAS) and Guides (hereafter referred to as "IEC Publication(s)"). Their preparation is entrusted to technical committees; any IEC National Committee interested in the subject dealt with may participate in this preparatory work. International, governmental and non-governmental organizations liaising with the IEC also participate in this preparation. IEC collaborates closely with the International Organization for Standardization (ISO) in accordance with conditions determined by agreement between the two organizations.
2) The formal decisions or agreements of IEC on technical matters express, as nearly as possible, an international consensus of opinion on the relevant subjects since each technical committee has representation from all interested IEC National Committees.
3) IEC Publications have the form of recommendations for international use and are accepted by IEC National Committees in that sense. While all reasonable efforts are made to ensure that the technical content of IEC Publications is accurate, IEC cannot be held responsible for the way in which they are used or for any misinterpretation by any end user.
4) In order to promote international uniformity, IEC National Committees undertake to apply IEC Publications transparently to the maximum extent possible in their national and regional publications. Any divergence between any IEC Publication and the corresponding national or regional publication shall be clearly indicated in the latter.
5) IEC itself does not provide any attestation of conformity. Independent certification bodies provide conformity assessment services and, in some areas, access to IEC marks of conformity. IEC is not responsible for any services carried out by independent certification bodies.
6) All users should ensure that they have the latest edition of this publication.
7) No liability shall attach to IEC or its directors, employees, servants or agents including individual experts and members of its technical committees and IEC National Committees for any personal injury, property damage or other damage of any nature whatsoever, whether direct or indirect, or for costs (including legal fees) and expenses arising out of the publication, use of, or reliance upon, this IEC Publication or any other IEC Publications.
8) Attention is drawn to the Normative references cited in this publication. Use of the referenced publications is indispensable for the correct application of this publication.
9) Attention is drawn to the possibility that some of the elements of this IEC Publication may be the subject of patent rights. IEC shall not be held responsible for identifying any or all such patent rights.

Attention is drawn to the fact that the use of the associated protocol type is restricted by its intellectual-property-right holders. In all cases, the commitment to limited release of intellectual-property-rights made by the holders of those rights permits a layer protocol type to be used with other layer protocols of the same type, or in other type combinations explicitly authorized by its intellectual-property-right holders.

NOTE Combinations of protocol types are specified in IEC 61784-1 series and IEC 61784-2 series.

IEC 61158-5-4 has been prepared by subcommittee 65C: Industrial networks, of IEC technical committee 65: Industrial-process measurement, control and automation. It is an International Standard.

This fourth edition cancels and replaces the third edition published in 2019. This edition constitutes a technical revision.

Documents
Document Sharing Hub

Full document details: IEC 61158-5-4-2023

This edition includes the following significant technical change with respect to the previous edition:

a) Use of extended data size in an APDU body. This extension is restricted to nodes operating on a P-NET IP network. There are no technical changes to this sub-part of the standard.

The text of this International Standard is based on the following documents:

Draft	Report on voting
65C/1203/FDIS	65C/1244/RVD

Full information on the voting for its approval can be found in the report on voting indicated in the above table.

The language used for the development of this International Standard is English.

This document was drafted in accordance with ISO/IEC Directives, Part 2, and developed in accordance with ISO/IEC Directives, Part 1 and ISO/IEC Directives, IEC Supplement, available at www.iec.ch/members_experts/refdocs. The main document types developed by IEC are described in greater detail at www.iec.ch/publications.

A list of all the parts of the IEC 61158 series, under the general title *Industrial communication networks – Fieldbus specifications*, can be found on the IEC web site.

The committee has decided that the contents of this document will remain unchanged until the stability date indicated on the IEC website under webstore.iec.ch in the data related to the specific document. At this date, the document will be

- reconfirmed,
- withdrawn,
- replaced by a revised edition, or
- amended.

Documents
Document Sharing Hub

Full document details: IEC 61158-5-4-2023

INTRODUCTION

This document is one of a series produced to facilitate the interconnection of automation system components. It is related to other standards in the set as defined by the "three-layer" fieldbus reference model described in IEC 61158-1.

The application service is provided by the application protocol making use of the services available from the data-link or other immediately lower layer. This document defines the application service characteristics that fieldbus applications and/or system management can exploit.

Throughout the set of fieldbus standards, the term "service" refers to the abstract capability provided by one layer of the OSI Basic Reference Model to the layer immediately above. Thus, the application layer service defined in this document is a conceptual architectural service, independent of administrative and implementation divisions.

Documents
Document Sharing Hub

Full document details: IEC 61158-5-4-2023

INDUSTRIAL COMMUNICATION NETWORKS – FIELDBUS SPECIFICATIONS –

Part 5-4: Application layer service definition – Type 4 elements

1 Scope

1.1 General

The fieldbus application layer (FAL) provides user programs with a means to access the fieldbus communication environment. In this respect, the FAL can be viewed as a "window between corresponding application programs".

This part of IEC 61158 provides common elements for basic time-critical and non-time-critical messaging communications between application programs in an automation environment and material specific to Type 4 fieldbus. The term "time-critical" is used to represent the presence of a time-window, within which one or more specified actions are required to be completed with some defined level of certainty. Failure to complete specified actions within the time window risks failure of the applications requesting the actions, with attendant risk to equipment, plant and possibly human life.

This document defines in an abstract way the externally visible service provided by the Type 4 fieldbus application layer in terms of:

- an abstract model for defining application resources (objects) capable of being manipulated by users via the use of the FAL service;
- the primitive actions and events of the service;
- the parameters associated with each primitive action and event, and the form which they take; and
- the interrelationship between these actions and events, and their valid sequences.

The purpose of this document is to define the services provided to:

- the FAL user at the boundary between the user and the application layer of the fieldbus reference model, and
- Systems Management at the boundary between the application layer and Systems Management of the fieldbus reference model.

This document specifies the structure and services of the Type 4 fieldbus application layer, in conformance with the OSI Basic Reference Model (ISO/IEC 7498-1) and the OSI application layer structure (ISO/IEC 9545).

FAL services and protocols are provided by FAL application-entities (AE) contained within the application processes. The FAL AE is composed of a set of object-oriented application service elements (ASEs) and a layer management entity (LME) that manages the AE. The ASEs provide communication services that operate on a set of related application process object (APO) classes. One of the FAL ASEs is a management ASE that provides a common set of services for the management of the instances of FAL classes.

Documents
Document Sharing Hub
Full document details: IEC 61158-5-4-2023

Although these services specify, from the perspective of applications, how request and responses are issued and delivered, they do not include a specification of what the requesting and responding applications are to do with them. That is, the behavioral aspects of the applications are not specified; only a definition of what requests and responses they can send/receive is specified. This permits greater flexibility to the FAL users in standardizing such object behavior. In addition to these services, some supporting services are also defined in this document to provide access to the FAL to control certain aspects of its operation.

1.2 Specifications

The principal objective of this document is to specify the characteristics of conceptual application layer services suitable for time-critical communications, and thus supplement the OSI Basic Reference Model in guiding the development of application layer protocols for time-critical communications.

A secondary objective is to provide migration paths from previously-existing industrial communications protocols. It is this latter objective which gives rise to the diversity of services standardized as the various Types of IEC 61158, and the corresponding protocols standardized in in subparts of IEC 61158-6.

This document can be used as the basis for formal application programming interfaces. Nevertheless, it is not a formal programming interface, and any such interface will need to address implementation issues not covered by this specification, including

a) the sizes and octet ordering of various multi-octet service parameters, and

b) the correlation of paired request and confirm, or indication and response, primitives.

1.3 Conformance

This document does not specify individual implementations or products, nor does it constrain the implementations of application layer entities within industrial automation systems.

There is no conformance of equipment to this application layer service definition standard. Instead, conformance is achieved through implementation of conforming application layer protocols that fulfill the Type 2 application layer services as defined in this document.

2 Normative references

The following documents are referred to in the text in such a way that some or all of their content constitutes requirements of this document. For dated references, only the edition cited applies. For undated references, the latest edition of the referenced document (including any amendments) applies.

NOTE All parts of the IEC 61158 series, as well as IEC 61784-1 series and IEC 61784-2 series are maintained simultaneously. Cross-references to these documents within the text therefore refer to the editions as dated in this list of normative references.

IEC 61158-3-4:2023, *Industrial communication networks – Fieldbus specifications – Part 3-4: Data-link layer service definition – Type 4 elements*

IEC 61158-4-4:2023, *Industrial communication networks – Fieldbus specifications – Part 4-4: Data-link layer protocol specification – Type 4 elements*

IEC 61158-6-4:2023, *Industrial communication networks – Fieldbus specifications – Part 6-4: Application layer protocol specification – Type 4 elements*

ISO/IEC 7498-1, *Information technology – Open Systems Interconnection – Basic Reference Model – Part 1: The Basic Model*

AVA Documents
Document Sharing Hub

Full document details: IEC 61158-5-4-2023

ISO/IEC 7498-3, *Information technology – Open Systems Interconnection – Basic Reference Model – Part 3: Naming and addressing*

ISO/IEC 8822, *Information technology – Open Systems Interconnection – Presentation service definition*

ISO/IEC 8824-1, *Information technology – Abstract Syntax Notation One (ASN.1) – Part 1: Specification of basic notation*

ISO/IEC 9545, *Information technology – Open Systems Interconnection – Application Layer structure*

ISO/IEC 10731, *Information technology – Open Systems Interconnection – Basic Reference Model – Conventions for the definition of OSI services*

ISO/IEC 60559, *Floating-point arithmetic*

3 Terms, definitions, symbols, abbreviated terms and conventions

For the purposes of this document, the following terms, definitions, symbols, abbreviated terms and conventions apply.

ISO and IEC maintain terminological databases for use in standardization at the following addresses:

- IEC Electropedia: available at https://www.electropedia.org/
- ISO Online browsing platform: available at https://www.iso.org/obp

3.1 ISO/IEC 7498-1 terms

For the purposes of this document, the following terms as defined in ISO/IEC 7498 1 apply:

a) application entity
b) application process
c) application protocol data unit
d) application service element
e) application entity invocation
f) application process invocation
g) application transaction
h) real open system
i) transfer syntax

3.2 ISO/IEC 8822 terms

For the purposes of this document, the following terms as defined in ISO/IEC 8822 apply:

a) abstract syntax
b) presentation context

Documents
Document Sharing Hub

Full document details: IEC 61158-5-4-2023

3.3 ISO/IEC 9545 terms

For the purposes of this document, the following terms as defined in ISO/IEC 9545 apply:

a) application-association
b) application-context
c) application context name
d) application-entity-invocation
e) application-entity-type
f) application-process-invocation
g) application-process-type
h) application-service-element
i) application control service element

3.4 ISO/IEC 8824-1 terms

For the purposes of this document, the following terms as defined in ISO/IEC 8824-1 apply:

a) object identifier
b) type

3.5 Fieldbus data-link layer terms

For the purposes of this document, the following terms apply.

a) DL-Time
b) DL-Scheduling-policy
c) DLCEP
d) DLC
e) DLPDU
f) DLSDU
g) DLSAP
h) fixed tag
i) generic tag
j) link
k) network address
l) node address
m) node
n) tag
o) scheduled
p) unscheduled

3.6 Fieldbus application layer specific definitions

For the purposes of this document, the following terms and definitions apply.

3.6.1
application
function or data structure for which data is consumed or produced

Documents
Document Sharing Hub
Full document details: IEC 61158-5-4-2023

3.6.2
application objects
multiple object classes that manage and provide a run time exchange of messages across the network and within the network device

3.6.3
application process
part of a distributed application on a network, which is located on one device and unambiguously addressed

3.6.4
application process identifier
value that distinguishes an application process among multiple application processes used in a device

3.6.5
application process object
component of an application process that is identifiable and accessible through an FAL application relationship

Note 1 to entry: Application process object definitions are composed of a set of values for the attributes of their class (see the definition for Application Process Object Class Definition). Application process object definitions can be accessed remotely using the services of the FAL Object Management ASE. FAL Object Management services can be used to load or update object definitions, to read object definitions, and to dynamically create and delete application objects and their corresponding definitions.

3.6.6
application process object class
class of application process objects defined in terms of the set of their network-accessible attributes and services

3.6.7
application relationship
cooperative association between two or more application-entity-invocations for the purpose of exchange of information and coordination of their joint operation

Note 1 to entry: This relationship is activated either by the exchange of application-protocol-data-units or as a result of preconfiguration activities.

3.6.8
application relationship application service element
application-service-element that provides the exclusive means for establishing and terminating all application relationships

3.6.9
application relationship endpoint
context and behavior of an application relationship as seen and maintained by one of the application processes involved in the application relationship

Note 1 to entry: Each application process involved in the application relationship maintains its own application relationship endpoint.

3.6.10
attribute
description of an externally visible characteristic or feature of an object

Note 1 to entry: The attributes of an object contain information about variable portions of an object. Typically, they provide status information or govern the operation of an object. Attributes can also affect the behavior of an object. Attributes are divided into class attributes and instance attributes.

Documents
Document Sharing Hub
Full document details: IEC 61158-5-4-2023

3.6.11
behavior
indication of how an object responds to particular events

3.6.12
bit-no
number of a bit in a bitstring or an octet

3.6.13
channel
single physical or logical link of an input or output application object of a server to the process

3.6.14
class
set of objects, all of which represent the same kind of system component

Note 1 to entry: A class is a generalisation of an object; a template for defining variables and methods. All objects in a class are identical in form and behavior, but usually contain different data in their attributes.

3.6.15
class attributes
attribute that is shared by all objects within the same class

3.6.16
class code
unique identifier assigned to each object class

3.6.17
class specific service
service defined by a particular object class to perform a required function which is not performed by a common service

Note 1 to entry: A class specific object is unique to the object class which defines it.

3.6.18
client
<object> object which uses the services of another (server) object to perform a task

3.6.19
client
<message> initiator of a message to which a server reacts

3.6.20
communication objects
components that manage and provide a run time exchange of messages across the network

EXAMPLES: Connection Manager object, Unconnected Message Manager (UCMM) object, and Message Router object.

3.6.21
connection
logical binding between application objects that may be within the same or different devices

Note 1 to entry: Connections may be either point-to-point or multipoint.

3.6.22
conveyance path
unidirectional flow of APDUs across an application relationship

Documents
Document Sharing Hub
Full document details: IEC 61158-5-4-2023

3.6.23
dedicated AR
AR used directly by the FAL User

Note 1 to entry: On Dedicated ARs, only the FAL Header and the user data are transferred.

3.6.24
default DL-address
value 126 as an initial value for DL-address, which has to be changed (e.g. by assignment of a DL-address via the fieldbus) before operation with a DP-master (class 1)

3.6.25
device
physical hardware connected to the link

Note 1 to entry: A device may contain more than one node.

3.6.26
dynamic AR
AR that requires the use of the AR establishment procedures to place it into an established state

3.6.27
endpoint
one of the communicating entities involved in a connection

3.6.28
error
discrepancy between a computed, observed or measured value or condition and the specified or theoretically correct value or condition

3.6.29
error class
general grouping for related error definitions and corresponding error codes

3.6.30
error code
identification of a specific type of error within an error class

3.6.31
event
instance of a change of conditions

3.6.32
FAL subnet
subnetworks composed of one or more data link segments, identified by a subset of the network address

Note 1 to entry: FAL subnets are permitted to contain bridges but not routers.

3.6.33
FIFO variable
Variable Object class, composed of a set of homogeneously typed elements, where the first written element is the first element that can be read.

Note 1 to entry: On the fieldbus only one, complete element can be transferred as a result of one service invocation.

3.6.34
frame
deprecated synonym for DLPDU

Documents
Document Sharing Hub

Full document details: IEC 61158-5-4-2023

3.6.35
interface
<functional unit> shared boundary between two functional units, defined by functional characteristics, signal characteristics, or other characteristics as appropriate

3.6.36
interface
<communication protocol> collection of FAL class attributes and services that represents a specific view on the FAL class

3.6.37
invocation
act of using a service or other resource of an application process

Note 1 to entry: Each invocation represents a separate thread of control that can be described by its context. Once the service completes, or use of the resource is released, the invocation ceases to exist. For service invocations, a service that has been initiated but not yet completed is referred to as an outstanding service invocation. Also for service invocations, an Invoke ID may be used to unambiguously identify the service invocation and differentiate it from other outstanding service invocations.

3.6.38
index
address of an object within an application process

3.6.39
instance
actual physical occurrence of an object within a class that identifies one of many objects within the same object class

EXAMPLE California is an instance of the object class state.

Note 1 to entry: The terms object, instance, and object instance are used to refer to a specific instance.

3.6.40
instance attributes
attribute that is unique to an object instance and not shared by the object class

3.6.41
instantiated
object that has been created in a device

3.6.42
logical device
certain FAL class that abstracts a software component or a firmware component as an autonomous self-contained facility of an automation device

3.6.43
manufacturer ID
identification of each product manufacturer by a unique number

3.6.44
management information
network-accessible information that supports managing the operation of the fieldbus system, including the application layer

Note 1 to entry: Managing includes functions such as controlling, monitoring, and diagnosing.

3.6.45
member
piece of an attribute that is structured as an element of an array

Documents
Document Sharing Hub

Full document details: IEC 61158-5-4-2023

3.6.46
method
<object> a synonym for an operational service which is provided by the server ASE and invoked by a client

3.6.47
module
hardware or logical component of a physical device

3.6.48
network
set of nodes connected by some type of communication medium, including any intervening repeaters, bridges, routers and lower-layer gateways

3.6.49
object
abstract representation of a particular component within a device, usually a collection of related data (in the form of variables) and methods (procedures) for operating on that data that have clearly defined interface and behavior

3.6.50
object specific service
service unique to the object class which defines it

3.6.51
peer
role of an AR endpoint in which it is capable of acting as both client and server

3.6.52
physical device
automation or other network device

3.6.53
property
general term for descriptive information about an object

3.6.54
provider
source of a data connection

3.6.55
publisher
role of an AR endpoint that transmits APDUs onto the fieldbus for consumption by one or more subscribers

Note 1 to entry: A publisher is possible aware of the identity or the number of subscribers, or not and it can publish its APDUs using a dedicated AR.

3.6.56
publishing manager
role of an AR endpoint in which it issues one or more confirmed service request APDUs to a publisher to request the publisher to publish a specified object

Note 1 to entry: Two types of publishing managers are defined by this document, pull publishing managers and push publishing managers, each of which is defined separately

Documents
Document Sharing Hub
Full document details: IEC 61158-5-4-2023

3.6.57
pull subscriber
type of subscriber that recognizes received confirmed service response APDUs as published object data

3.6.58
resource
processing or information capability of a subsystem

3.6.59
route endpoint
object container containing Variable Objects of a variable class

3.6.60
server
<communication protocol> role of an AREP in which it returns a confirmed service response APDU to the client that initiated the request

3.6.61
server
<object> object which provides services to another (client) object

3.6.62
service
operation or function than an object and/or object class performs upon request from another object and/or object class

3.6.63
subscriber
role of an AREP in which it receives APDUs produced by a publisher

3.7 Abbreviations and symbols

AE	Application Entity
AL	Application Layer
ALME	Application Layer Management Entity
ALP	Application Layer Protocol
APO	Application Object
AP	Application Process
APDU	Application Protocol Data Unit
API	Application Process Identifier
AR	Application Relationship
AREP	Application Relationship End Point
ASCII	American Standard Code for Information Interchange
ASE	Application Service Element
Cnf	Confirmation
CR	Communication Relationship
CREP	Communication Relationship End Point
DL-	(as a prefix) Data Link-
DLC	Data Link Connection
DLCEP	Data Link Connection End Point
DLL	Data Link Layer

Documents
Document Sharing Hub
Full document details: IEC 61158-5-4-2023

DLM	Data Link-management
DLSAP	Data Link Service Access Point
DLSDU	DL-service-data-unit
DNS	Domain Name Service
DP	Decentralised Peripherals
FAL	Fieldbus Application Layer
FIFO	First In First Out
HMI	Human-Machine Interface
ID	Identifier
IDL	Interface Definition Language
IEC	International Electrotechnical Commission
Ind	Indication
IP	Internet Protocol
ISO	International Organization for Standardization
LDev	Logical Device
LME	Layer Management Entity
OSI	Open Systems Interconnect
PDev	Physical Device
PDU	Protocol Data Unit
PL	Physical Layer
QoS	Quality of Service
REP	Route Endpoint
Req	Request
Rsp	Response
RT	Runtime
SAP	Service Access Point
SCL	Security Level
SDU	Service Data Unit
SEM	State event matrix
SMIB	System Management Information Base
SMK	System Management Kernel
STD	State transition diagram, used to describe object behavior
VAO	Variable Object

3.8 Conventions

3.8.1 Overview

The FAL is defined as a set of object-oriented ASEs. Each ASE is specified in a separate subclause. Each ASE specification is composed of two parts, its class specification, and its service specification.

The class specification defines the attributes of the class. The attributes are accessible from instances of the class using the Object Management ASE services specified in Clause 5 of this document. The service specification defines the services that are provided by the ASE.

Documents
Document Sharing Hub

Full document details: IEC 61158-5-4-2023

3.8.2 General conventions

This document uses the descriptive conventions given in ISO/IEC 10731.

3.8.3 Conventions for class definitions

Class definitions are described using templates. Each template consists of a list of attributes for the class. The general form of the template is shown below:

FAL ASE:			**ASE Name**
CLASS:	**Class Name**		
CLASS ID:			#
PARENT CLASS:			Parent Class Name
ATTRIBUTES:			
1	(o)	Key Attribute:	numeric identifier
2	(o)	Key Attribute:	name
3	(m)	Attribute:	attribute name(values)
4	(m)	Attribute:	attribute name(values)
4.1	(s)	Attribute:	attribute name(values)
4.2	(s)	Attribute:	attribute name(values)
4.3	(s)	Attribute:	attribute name(values)
5.	(c)	Constraint:	constraint expression
5.1	(m)	Attribute:	attribute name(values)
5.2	(o)	Attribute:	attribute name(values)
6	(m)	Attribute:	attribute name(values)
6.1	(s)	Attribute:	attribute name(values)
6.2	(s)	Attribute:	attribute name(values)
SERVICES:			
1	(o)	OpsService:	service name
2.	(c)	Constraint:	constraint expression
2.1	(o)	OpsService:	service name
3	(m)	MgtService:	service name

1) The "FAL ASE:" entry is the name of the FAL ASE that provides the services for the class being specified.
2) The "CLASS:" entry is the name of the class being specified. All objects defined using this template will be an instance of this class. The class may be specified by this document, or by a user of this document.
3) The "CLASS ID:" entry is a number that identifies the class being specified. This number is unique within the FAL ASE that will provide the services for this class. When qualified by the identity of its FAL ASE, it unambiguously identifies the class within the scope of the FAL. The value "NULL" indicates that the class cannot be instantiated. Class IDs between 1 and 255 are reserved by this document to identify standardized classes. They have been assigned to maintain compatibility with existing national standards. CLASS IDs between 256 and 2048 are allocated for identifying user defined classes.
4) The "PARENT CLASS:" entry is the name of the parent class for the class being specified. All attributes defined for the parent class and inherited by it are inherited for the class being defined, and therefore do not have to be redefined in the template for this class.

NOTE The parent-class "TOP" indicates that the class being defined is an initial class definition. The parent class TOP is used as a starting point from which all other classes are defined. The use of TOP is reserved for classes defined by this document.

Documents
Document Sharing Hub

Full document details: IEC 61158-5-4-2023

5) The "ATTRIBUTES" label indicate that the following entries are attributes defined for the class.
   a) Each of the attribute entries contains a line number in column 1, a mandatory (m) / optional (o) / conditional (c) / selector (s) indicator in column 2, an attribute type label in column 3, a name or a conditional expression in column 4, and optionally a list of enumerated values in column 5. In the column following the list of values, the default value for the attribute may be specified.
   b) Objects are normally identified by a numeric identifier or by an object name, or by both. In the class templates, these key attributes are defined under the key attribute.
   c) The line number defines the sequence and the level of nesting of the line. Each nesting level is identified by period. Nesting is used to specify
      i) fields of a structured attribute (4.1, 4.2, 4.3),
      ii) attributes conditional on a constraint statement (5). Attributes may be mandatory (5.1) or optional (5.2) if the constraint is true. Not all optional attributes require constraint statements as does the attribute defined in (5.2).
      iii) the selection fields of a choice type attribute (6.1 and 6.2).
6) The "SERVICES" label indicates that the following entries are services defined for the class.
   a) An (m) in column 2 indicates that the service is mandatory for the class, while an (o) indicates that it is optional. A (c) in this column indicates that the service is conditional. When all services defined for a class are defined as optional, at least one has to be selected when an instance of the class is defined.
   b) The label "OpsService" designates an operational service (1).
   c) The label "MgtService" designates an management service (2).
   d) The line number defines the sequence and the level of nesting of the line. Each nesting level is identified by period. Nesting within the list of services is used to specify services conditional on a constraint statement.

3.8.4 Conventions for service definitions

3.8.4.1 General

The service model, service primitives, and time-sequence diagrams used are entirely abstract descriptions; they do not represent a specification for implementation.

3.8.4.2 Service parameters

Service primitives are used to represent service user/service provider interactions (ISO/IEC 10731). They convey parameters which indicate information available in the user/provider interaction. In any particular interface, not all parameters need be explicitly stated.

The service specifications of this document uses a tabular format to describe the component parameters of the ASE service primitives. The parameters which apply to each group of service primitives are set out in tables. Each table consists of up to five columns for the

1) Parameter name,
2) request primitive,
3) indication primitive,
4) response primitive, and
5) confirm primitive.

Documents
Document Sharing Hub
Full document details: IEC 61158-5-4-2023

One parameter (or component of it) is listed in each row of each table. Under the appropriate service primitive columns, a code is used to specify the type of usage of the parameter on the primitive specified in the column:

M parameter is mandatory for the primitive

U parameter is a User option, and can be provided or not depending on dynamic usage of the service user. When not provided, a default value for the parameter is assumed.

C parameter is conditional upon other parameters or upon the environment of the service user.

— (blank) parameter is never present.

S parameter is a selected item.

Some entries are further qualified by items in brackets. These may be

a) a parameter-specific constraint:

"(=)" indicates that the parameter is semantically equivalent to the parameter in the service primitive to its immediate left in the table.

b) an indication that some note applies to the entry:

"(n)" indicates that the following note "n" contains additional information pertaining to the parameter and its use.

3.8.4.3 Service procedures

The procedures are defined in terms of

- the interactions between application entities through the exchange of fieldbus Application Protocol Data Units, and
- the interactions between an application layer service provider and an application layer service user in the same system through the invocation of application layer service primitives.

These procedures are applicable to instances of communication between systems which support time-constrained communications services within the fieldbus Application Layer.

4 Concepts

4.1 Overview

The fieldbus is intended to be used in factories and process plants to interconnect primary automation devices (e.g. sensors, actuators, local display devices, annunciators, programmable logic controllers, small single loop controllers, and stand-alone field controls) with control and monitoring equipment located in control rooms.

Primary automation devices are associated with the lowest levels of the industrial automation hierarchy and perform a limited set of functions within a definite time window. Some of these functions include diagnostics, data validation, and handling of multiple inputs and outputs.

These primary automation devices, also termed field devices, are located close to the process fluids, the fabricated part, the machine, the operator and the environment. This use positions the fieldbus at the lowest levels of the Computer Integrated Manufacturing (CIM) architecture.

Some of the expected benefits in using fieldbus are reduction in wiring, increase in amount of data exchanged, wider distribution of control between the primary automation devices and the control room equipment, and the satisfaction of time critical constraints.

Documents
Document Sharing Hub
Full document details: IEC 61158-5-4-2023

Clause 4 describes fundamentals of the FAL. Detailed descriptive information about each of the FAL ASEs can be found in the "Overview" subclause of each of the Communication Model specifications.

4.2 Architectural relationships

4.2.1 Relationship to the Application Layer of the OSI basic reference model

The functions of the FAL have been described according to OSI layering principles. However, its architectural relationship to the lower layers is different, as shown in Figure 1.

– The FAL includes OSI functions together with extensions to cover time-critical requirements. The OSI Application Layer Structure standard (ISO/IEC 9545) was used as a basis for specifying the FAL.
– The FAL directly uses the services of the underlying layer. The underlying layer can be the data link layer or any layer in between. When using the underlying layer, the FAL can provide functions normally associated with the OSI Middle Layers for proper mapping onto the underlying layer.

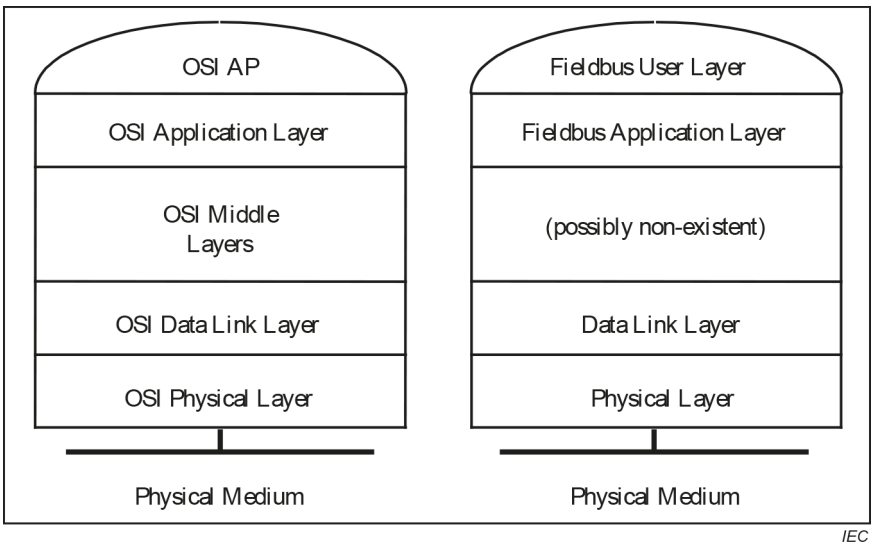

Figure 1 – Relationship to the OSI basic reference model

4.2.2 Relationships to other fieldbus entities

4.2.2.1 General

The fieldbus Application Layer (FAL) architectural relationships, as illustrated in Figure 2, have been designed to support the interoperability needs of time-critical systems distributed within the fieldbus environment.

Within this environment, the FAL provides communications services to time-critical and non-time-critical applications located in fieldbus devices.

In addition, the FAL directly uses the Data Link Layer to transfer its application layer protocol data units. It does this using a set of data transfer services and a set of supporting services used to control the operational aspects of the Data Link Layer.

Documents
Document Sharing Hub
Full document details: IEC 61158-5-4-2023

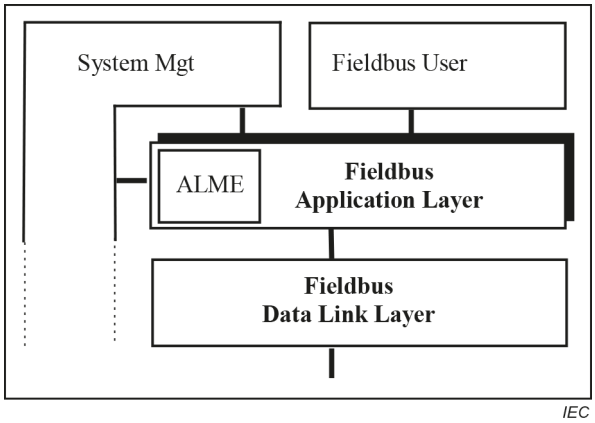

Figure 2 – Architectural positioning of the fieldbus Application Layer

4.2.2.2 Use of the fieldbus Data Link Layer

The fieldbus Application Layer (FAL) provides network access to fieldbus APs. It interfaces directly to the fieldbus Data Link Layer for transfer of its APDUs.

The Data Link Layer provides various types of services to the FAL for the transfer of data between Data Link endpoints (e.g. DLSAPs, DLCEPs).

4.2.2.3 Support for fieldbus applications

Fieldbus applications are represented to the network as application processes (APs). APs are the components of a distributed system that can be individually identified and addressed.

Each AP contains an FAL application entity (AE) that provides network access for the AP. That is, each AP communicates with other APs through its AE. In this sense, the AE provides a window of visibility into the AP.

APs contain identifiable components that are also visible across the network. These components are represented to the network as Application Process Objects (APO). They can be identified by one or more key attributes. They are located at the address of the application process that contains them.

The services used to access them are provided by APO-specific application service elements (ASEs) contained within the FAL. These ASEs are designed to support user, function block, and management applications.

4.2.2.4 Support for system management

The FAL services can be used to support various management operations, including management of fieldbus systems, applications, and the fieldbus network.

4.2.2.5 Access to FAL layer management entities

One layer management entity (LME) can be present in each FAL entity on the network. FALMEs provide access to the FAL for system management purposes.

The set of data accessible by the System Manager is referred to as the System Management Information Base (SMIB). Each fieldbus Application Layer Management Entity (FALME) provides the FAL portion of the SMIB. How the SMIB is implemented is beyond the scope of this document.

Documents
Document Sharing Hub
Full document details: IEC 61158-5-4-2023

4.3 Fieldbus Application Layer structure

4.3.1 Overview

The structure of the FAL is a refinement of the OSI Application Layer Structure given in ISO/IEC 9545. As a result, the organization of 4.3 is similar to that of ISO/IEC 9545. Certain concepts presented here have been refined from ISO/IEC 9545 for the fieldbus environment.

The FAL differs from the other layers of OSI in two principal aspects.

- OSI defines a single type of application layer communications channel, the association, to connect APs to each other. The FAL defines the Application Relationship (AR), of which there are several types, to permit application processes (APs) to communicate with each other.
- The FAL uses the DLL to transfer its PDUs and not the presentation layer. Therefore, there is no explicit presentation context available to the FAL. It is possible that between the same pair (or set) of data link service access points the FAL protocol is not used concurrently with other application layer protocols.

4.3.2 Fundamental concepts

The operation of time critical real open systems is modeled in terms of interactions between time-critical APs. The FAL permits these APs to pass commands and data between them.

Cooperation between APs requires that they share sufficient information to interact and carry out processing activities in a coordinated manner. Their activities can be restricted to a single fieldbus segment, or they can span multiple segments. The FAL has been designed using a modular architecture to support the messaging requirements of these applications.

Cooperation between APs also sometimes requires that they share a common sense of time. The FAL or the Data Link Layer see IEC 61158-3-4 and IEC 61158-4-4 can provide for the distribution of time to all devices. They also can define local device services that can be used by APs to access the distributed time.

The remainder of 4.3 describes each of the modular components of the architecture and their relationships with each other. The components of the FAL are modeled as objects, each of which provides a set of FAL communication services for use by applications. The FAL objects and their relationships are described below. The detailed specifications of FAL objects and their services are provided in the following clauses of this document. IEC 61158-6-4 specifies the protocols necessary to convey these object services between applications.

4.3.3 Fieldbus application processes

4.3.3.1 Definition of the fieldbus AP

In the fieldbus environment, an application can be partitioned into a set of components and distributed across a number of devices on the network. Each of these components is referred to as a fieldbus Application Process (AP). A fieldbus AP is a variation of an Application Process as defined in ISO OSI Reference Model; see ISO/IEC 7498-1 and ISO/IEC 7498-3. Fieldbus APs can be unambiguously addressed by at least one individual Data Link Layer service access point address. Unambiguously addressed, in this context, means that no other AP may simultaneously be located by the same address. This definition does not prohibit an AP from being located by more than one individual or group data link service access point address.

Documents
Document Sharing Hub
Full document details: IEC 61158-5-4-2023

4.3.3.2 Communication services

Fieldbus APs communicate with each other using confirmed and unconfirmed services see ISO/IEC 10731. The services defined in this document for the FAL specify the semantics of the services as seen by the requesting and responding APs. The syntax of the messages used to convey the service requests and responses is defined in IEC 61158-6-4. The AP behavior associated with the services is specified by the AP.

Confirmed services are used to define request/response exchanges between APs.

Unconfirmed services, in contrast, are used to define the unidirectional transfer of messages from one AP to one or more remote APs. From a communications perspective, there is no relationship between separate invocations of unconfirmed services as there is between the request and response of a confirmed service.

4.3.3.3 AP interactions

4.3.3.3.1 General

Within the fieldbus environment, APs can interact with other APs as necessary to achieve their functional objectives. No constraints are imposed by this document on the organization of these interactions or the possible relationships that may exist between them.

For example, in the fieldbus environment, interactions can be based on request/response messages sent directly between APs, or on data/events sent by one AP for use by others. These two models of interactions between APs are referred to as client/server and publisher/subscriber interactions.

The services supported by an interaction model are conveyed by application relationship endpoints (AREPs) associated with the communicating APs. The role that the AREP plays in the interaction (e.g. client, server, peer, publisher, subscriber) is defined as an attribute of the AREP.

4.3.3.3.2 Client/server interactions

Client/server interactions are characterized by a bi-directional data flow between a client AP and one or more server APs. Figure 3 illustrates the interaction between a single client and a single server. In this type of interaction, the client can issue a confirmed or unconfirmed request to the server to perform some task. If the service is confirmed then the server will always return a response. If the service is unconfirmed, the server can return a response using an unconfirmed service defined for this purpose.

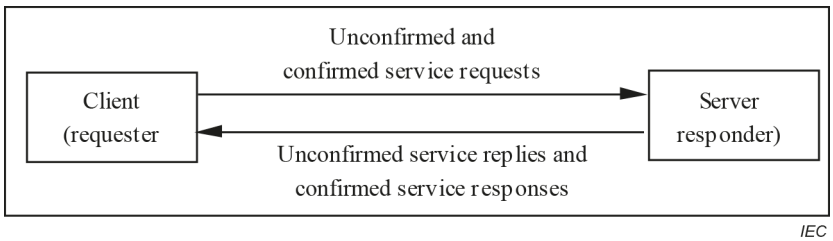

Figure 3 – Client/server interactions

Documents
Document Sharing Hub
Full document details: IEC 61158-5-4-2023

4.3.3.3.3 Publisher/subscriber interactions

4.3.3.3.3.1 General

Publisher/subscriber interactions, on the other hand, involve a single publisher AP, and a group of one or more subscriber APs. This type of interaction has been defined to support variations of two models of interaction between APs, the "pull" model and the "push" model. In both models, the setup of the publishing AP is performed by management and is outside the scope of this document.

4.3.3.3.3.2 Pull model interactions

In the "pull" model, the publisher receives a request to publish from a remote publishing *manager*, and broadcasts (or multicasts) its response across the network. The publishing manager is responsible only for initiating publishing by sending a request to the publisher.

Subscribers wishing to receive the published data listen for responses transmitted by the publisher. In this fashion, data is "pulled" from the publisher by requests from the publishing manager.

Confirmed FAL services are used to support this type of interaction. Two characteristics of this type of interaction differentiate it from the other types of interaction. First, a typical confirmed request/response exchange is performed between publishing manager and the publisher. However, the underlying conveyance mechanism provided by the FAL returns the response not just to the publishing manager, but also to all subscribers wishing to receive the published information. This is accomplished by having the Data Link Layer transmit the response to a group address, rather than to the individual address of the publishing manager. Therefore, the response sent by the publisher contains the published data and is multicast to the publishing manager and to all subscribers.

The second difference occurs in the behavior of the subscribers. Pull model subscribers, referred to as pull subscribers, are capable of accepting published data in confirmed service responses without having issued the corresponding request. Figure 4 illustrates these concepts.

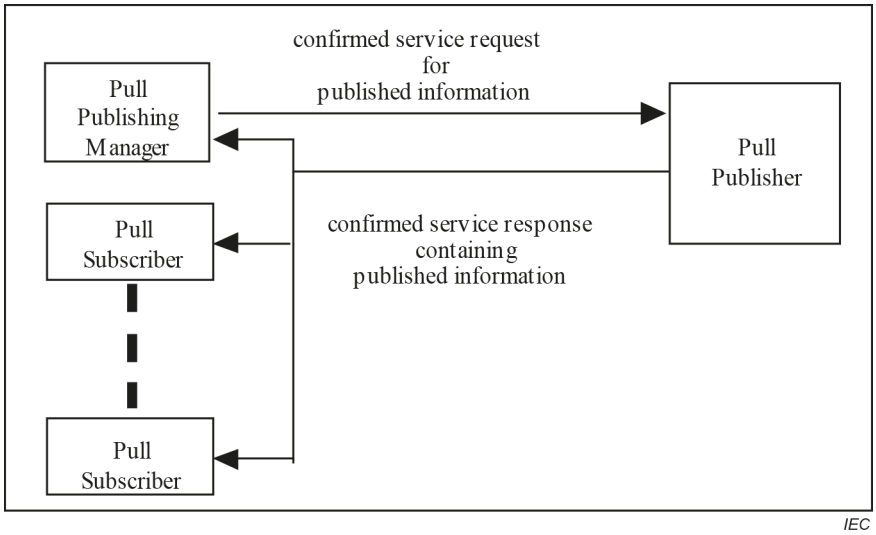

Figure 4 – Pull model interactions

4.3.3.3.3.3 Push model interactions

In the "push" model, two services can be used, one confirmed and one unconfirmed. The confirmed service is used by the subscriber to request to join the publishing. The response to this request is returned to the subscriber, following the client/server model of interaction. This exchange is only necessary when the subscriber and the publisher are located in different APs.

Documents
Document Sharing Hub
Full document details: IEC 61158-5-4-2023

The unconfirmed service used in the Push Model is used by the publisher to distribute its information to subscribers. In this case, the publisher is responsible for invoking the correct unconfirmed service at the appropriate time and for supplying the appropriate information. In this fashion, it is configured to "push" its data onto the network.

Subscribers for the Push Model receive the published unconfirmed services distributed by publishers. Figure 5 illustrates the concept of the Push Model.

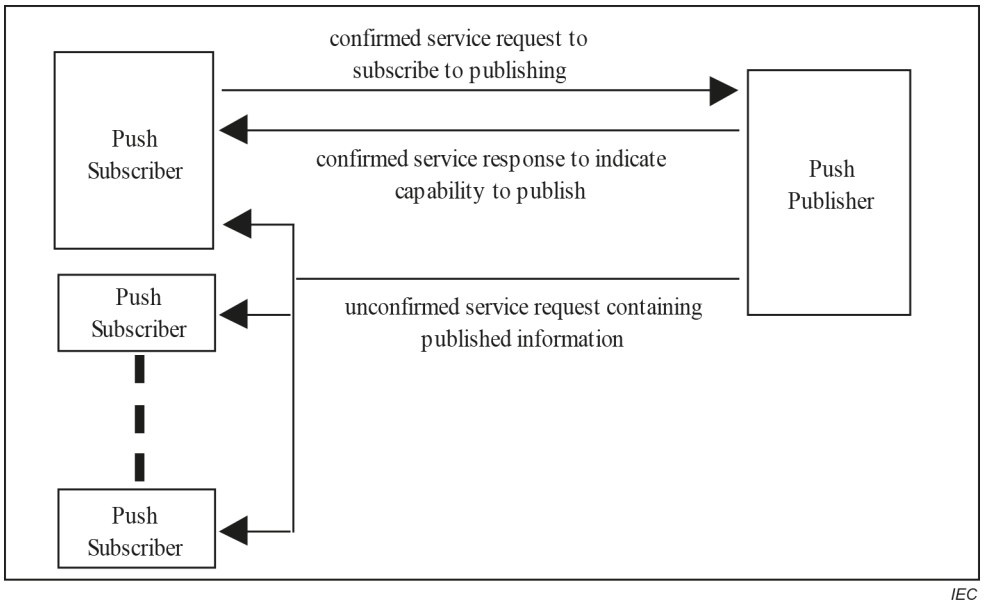

Figure 5 – Push model interactions

4.3.3.3.3.4 Timeliness of published information

To support the perishable nature of published information, the FAL can support four types of timeliness defined for publisher/subscriber interactions. Each make it possible for subscribers of published data to determine if the data they are receiving is up-to-date or "stale". These types are realized through mechanisms within the Data Link Layer (DLL). Each is described briefly below. For a more detailed description, refer to IEC 61158-3-4 and IEC 61158-4-4.

Type	Description
Transparent	This type of timeliness allows the user application process to determine the timeliness quality of data that it generates and have the timeliness quality accompany the information when it is transferred across the network. In this type of timeliness, the network provides no computation or measurement of timeliness. It merely conveys the timeliness quality provided with the data by the user application process.
Residence	When the FAL submits data from the publishing AP to the DLL for transmission, the DLL starts a timer. If the timer expires before the data has been transmitted, the DLL marks the buffer as "not timely" and conveys this timeliness information with the data.
Synchronized	This type of timeliness requires the coordination of two pieces of published information. One is the data to be published and the other is a special "sync mark". When the sync mark is received from the network a timer starts in each of the participating stations. Subsequently, when data is received for transmission by the DLL at the publishing station, or when the transmitted data is received from the network at a subscribing station, the DLL timeliness attribute for the data is set to TRUE. It remains TRUE until the reception of the next sync mark or until the timer expires. Data received after the timer expires but before the next sync mark does not cause the timeliness attribute to be reset to TRUE. It is only reset to TRUE if data is received within the time window after receipt of the sync mark. Data transmitted by the publisher station with the timeliness attribute set to FALSE maintains the setting of FALSE at each of the subscribers, regardless of their timer operation.

Documents
Document Sharing Hub
Full document details: IEC 61158-5-4-2023

Type	Description
Update	This type of timeliness requires the coordination of the same two pieces of published information defined for *synchronized* timeliness. In this type, the sync mark also starts a timer in each of the participating stations. Like *synchronized* timeliness, expiration of the timer always causes the timeliness attribute to be set to FALSE. Unlike *synchronized* timeliness, receipt of new data at any time (not just within the time window started with the receipt of a sync mark) causes the timeliness attribute to be set to TRUE.

4.3.3.4 AP structure

The internals of APs can be represented by one, or more Application Process Objects (APOs) and accessed through one or more Application Entities (AEs). AEs provide the communication capabilities of the AP. For each fieldbus AP, there is one and only one FAL AE. APOs are the network representation of application specific capabilities (user application process objects) of an AP that are accessible through its FAL AE.

4.3.3.5 AP class

An AP class is a definition of the attributes and services of an AP. The standard class definition for APs is defined in this document. User defined classes also can be specified. Class identifiers (described in 3.8.2) are assigned from a set reserved for this purpose.

4.3.3.6 AP type

As described above in the previous subclauses, APs are defined by instantiating an AP class. Each AP definition is composed of the attributes and services selected for the AP from those defined by its AP class. In addition, an AP definition contains values for one or more of the attributes selected for it. When two APs share the same definition, that definition is referred to as an AP type. Thus, an AP type is a generic specification of an AP that can used to define one or more APs.

4.3.4 Application process objects

4.3.4.1 Definition of APO

An application process object (APO) is a network representation of a specific aspect of an AP. Each APO represents a specific set of information and processing capabilities of an AP that are accessible through services of the FAL. APOs are used to represent these capabilities to other APs in a fieldbus system.

From the perspective of the FAL, an APO is modeled as a network accessible object contained within an AP or within another APO (APOs can contain other APOs). APOs provide the network definition for objects contained within an AP that are remotely accessible. The definition of an APO includes an identification of the FAL services that can be used by remote APs for remote access. The FAL services, as shown in Figure 6, are provided by the FAL communications entity of the AP, known as the FAL Applications Entity (FAL AE).

Documents
Document Sharing Hub
Full document details: IEC 61158-5-4-2023

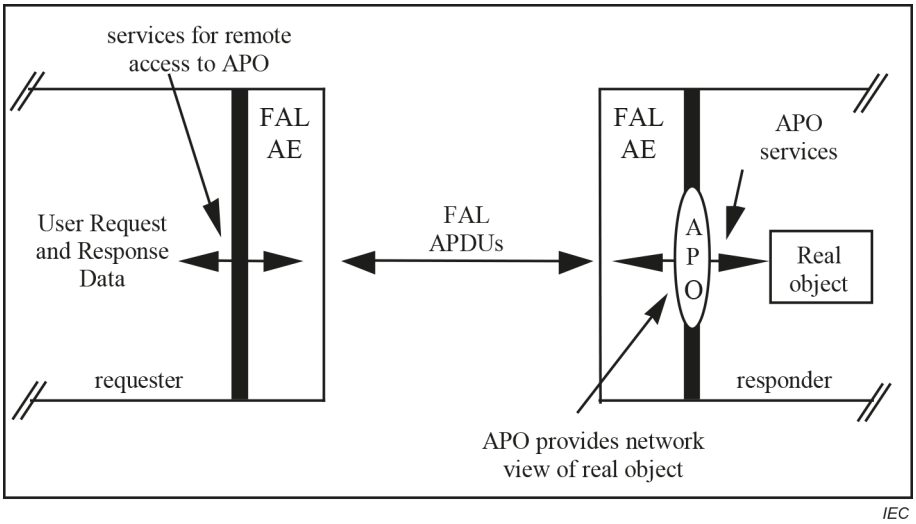

Figure 6 – APOs services conveyed by the FAL

In Figure 6, remote APs acting as clients can access the real object by sending requests through the APO that represents the real object. Local aspects of the AP convert between the network view (the APO) of the real object and the internal AP view of the real object.

To support the publisher/subscriber model of interaction, information about the real object can be published through its APO. Remote APs acting as subscribers see the APO view of the published information instead of having to know any of the real object specific details.

4.3.4.2 APO classes

An APO Class is a generic specification for a set of APOs, each of which is described by the same set of attributes and accessed using the same set of services.

APO Classes provide the mechanism for standardizing network visible aspects of APs. Each standard APO Class definition specifies a particular set of network accessible AP attributes and services. IEC 61158-6-4 specifies the syntax and the procedures used by the FAL protocol to provide remote access to the attributes and services of an APO Class.

Standard APO Classes are specified by this document for the purpose of standardizing remote access to APs. User defined classes can also be specified.

User defined classes are defined as subclasses of standardized APO Classes or of other user-defined classes. They can be defined by identifying new attributes or by indicating that optional attributes for the parent class are mandatory for the subclass. The conventions for defining classes defined in 3.8.2 can be used for this purpose. The method for registering or otherwise making these new class definitions available for public use is beyond the scope of this document.

4.3.4.3 APOs as instances of APO classes

APO Classes are defined in this document using templates. These templates are used not only to define APO Classes, but also to specify the instances of a class.

Each APO defined for an AP is an instance of an APO Class. Each APO provides the network view of a real object contained in an AP. An APO is defined by

1) selecting the attributes from its APO Class template that are to be accessible from the real object;

Documents
Document Sharing Hub
Full document details: IEC 61158-5-4-2023

2) assigning values to one or more attributes indicated as key in the template. Key attributes are used to identify the APO;
3) assigning values to zero, one, or more non-key attributes for the APO. Non-key attributes are used to characterize the APO;
4) selecting the services from the template that can be used by remote APs to access the real object.

Subclause 3.8.2 of this document specifies the conventions for class templates. These conventions provide for the definition of mandatory, optional, and conditional attributes and services.

Mandatory attributes and services are required to be present in all APOs of the class. Optional attributes and services can be selected, on an APO by APO basis, for inclusion in an APO. Conditional attributes and services are defined with an accompanying constraint statement. Constraint statements specify the conditions that indicate whether or not the attribute is to be present in an APO.

4.3.4.4 APO types

APO types provide the mechanism for defining standard APOs.

As described above in the previous subclauses, APOs are defined by instantiating an APO class. Each APO definition is composed of the attributes and services selected for the APO from those defined by its APO class. In addition, an APO definition contain values for one or more of the attributes selected for it. When two APOs share the same definition, except for the key attribute settings, that definition is referred to as an APO type. Thus, an APO type is a generic specification of an APO that can be used to define one or more APOs.

4.3.5 Application entities

4.3.5.1 Definition of FAL AE

An application entity provides the communication capabilities for a single AP. An FAL AE provides a set of services and the supporting protocols to enable communications between APs in a fieldbus environment. The services provided by FAL AEs are grouped into Application Service Elements (ASE), such that the FAL services provided to an AP are defined by the ASEs its FAL AE contains. Figure 7 illustrates this concept.

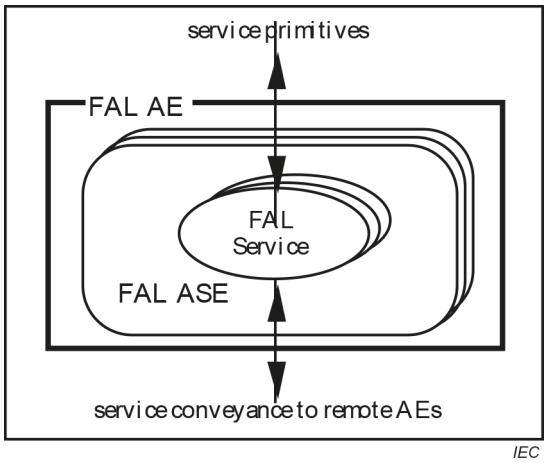

Figure 7 – Application entity structure

Documents
Document Sharing Hub
Full document details: IEC 61158-5-4-2023

4.3.5.2 AE type

Application entities that provide the same set of ASEs are of the same AE-type. Two AEs that share a common set of ASEs are capable of communicating with each other.

4.3.6 Fieldbus application service elements

4.3.6.1 General

An application service element (ASE), as defined in ISO/IEC 9545, is a set of application functions that provide a capability for the interworking of application-entity-invocations for a specific purpose. ASEs provide a set of services for conveying requests and responses to and from application processes and their objects. AEs, as defined above, are represented by a collection of ASE invocations within the AE.

4.3.6.2 FAL services

FAL Services convey functional requests/responses between APs. Each FAL service is defined to convey requests and responses for access to a real object modeled as an FAL accessible object.

The FAL defines both confirmed and unconfirmed services. Confirmed service requests are sent to the AP containing the real object. An invocation of a confirmed service request can be identified by a user supplied Invoke ID. This Invoke ID is returned in the response by the AP containing the real object. When present, it is used by the requesting AP and its FAL AE to associate the response with the appropriate request.

Unconfirmed services can be sent from the AP containing the real object to send information about the object. They also can be sent to the AP containing the real object to access the real object. Both types of unconfirmed services can be defined for the FAL.

4.3.6.3 Definition of FAL ASEs

4.3.6.3.1 General

A modular approach has been taken in the definition of FAL ASEs. The ASEs defined for the FAL are also object-oriented. In general, ASEs provide a set of services designed for one specific object class or for a related set of classes. Common object management ASEs, when present, provide a common set of management services applicable to all classes of objects.

To support remote access to the AP, the Application Relationship ASE is defined. It provides services to the AP for defining and establishing communication relationships with other APs, and it provides services to the other ASEs for conveying their service requests and responses.

Each FAL ASE defines a set of services, APDUs, and procedures that operate on the classes that it represents. Only a subset of the ASE services can be provided to meet the needs of an application. Profiles can be used to define such subsets. Definition of profiles is beyond the scope of this document.

APDUs are sent and received between FAL ASEs that support the same services. Each FAL AE contains, at a minimum, the AR ASE and at least one other ASE. Figure 8 illustrates an example set of the FAL ASEs and their architectural relationships. All APO ASEs follow this example.

Documents
Document Sharing Hub
Full document details: IEC 61158-5-4-2023

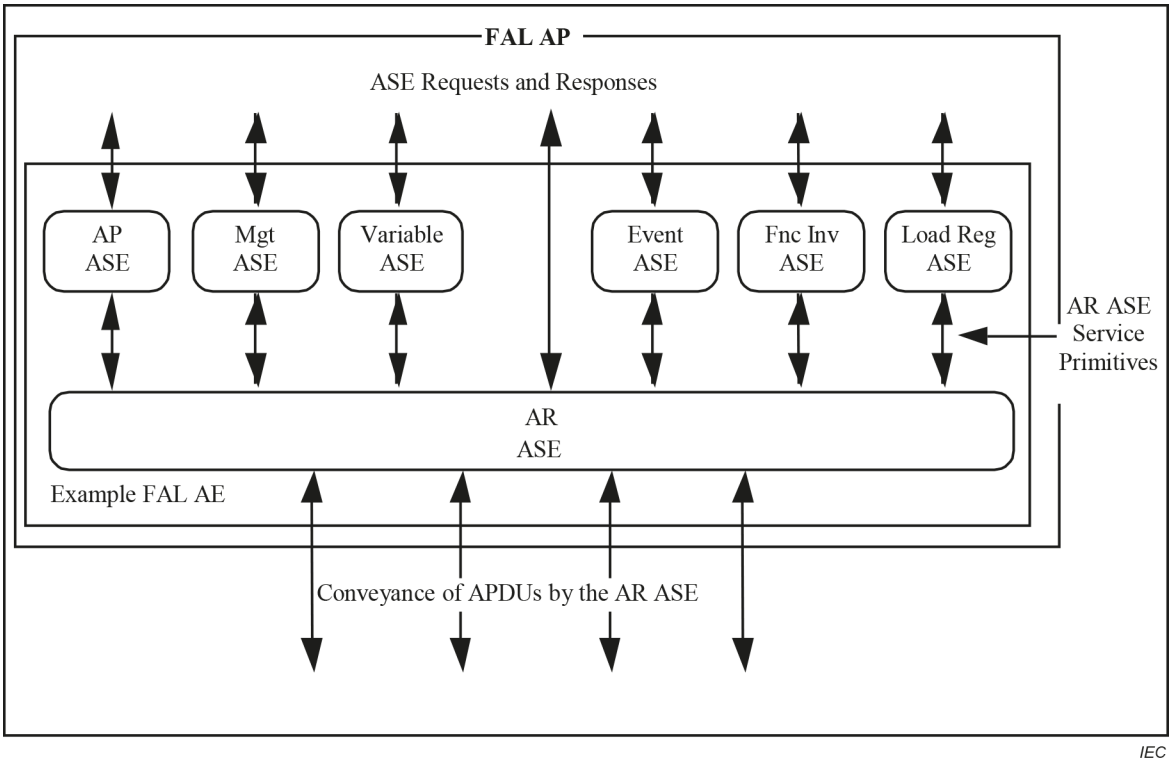

Figure 8 – Example FAL ASEs

4.3.6.3.2 Object management ASE

A special object management ASE can be specified for the FAL to provide services for the management of objects. Its services are used to access object attributes, and create and delete object instances. These services are used to manage network visible AP objects accessed through the FAL. The specific operational services that apply to each object type are specified in the definition of the ASE for the object type. Figure 9 illustrates the integration of management and operational services for an object within an AP.

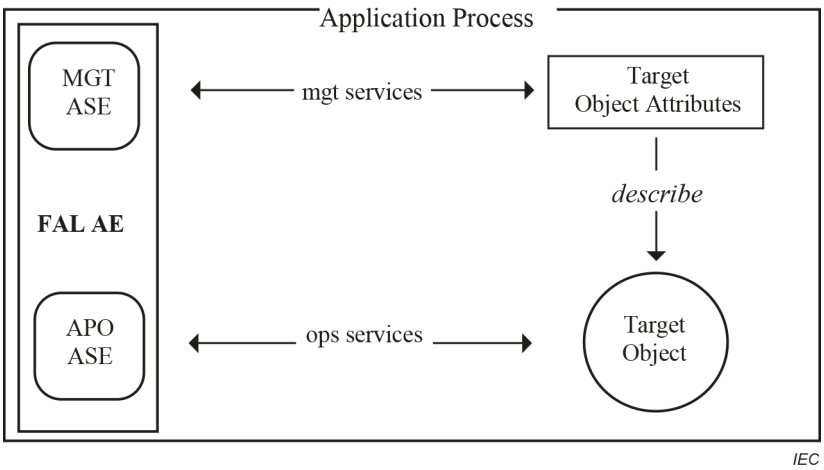

Figure 9 – FAL management of objects

4.3.6.3.3 AP ASE

An AP ASE can be specified for the identification and control of FAL APs. The attributes defined by the AP ASE specify characteristics of the AP about its manufacturer, and list its contents and capabilities.

AVA Documents Document Sharing Hub

Full document details: IEC 61158-5-4-2023

4.3.6.3.4 APO ASEs

The FAL specifies a set of ASEs with services defined for accessing the APOs of an AP. The APO ASEs defined for the FAL are defined by each Communication Model.

4.3.6.3.5 AR ASE

An AR ASE is specified to establish and maintain application relationships (ARs) that are used to convey FAL APDUs between/among APs. ARs represent application layer communication channels between APs. AR ASEs are responsible for providing services at the endpoints of ARs. AR ASE services can be defined for establishing, terminating, and aborting ARs, for conveying APDUs for the AE, and for indicating the local status of the AR to the user. In addition, local services can be defined for accessing certain aspects of AR endpoints.

4.3.6.4 FAL service conveyance

FAL APO ASEs provide services to convey requests and responses between service users and real objects.

To accomplish the task of conveying service requests and responses, three types of activities for the sending user and three corresponding types for the receiving user are defined. At the sending user, they accept service requests and responses to be conveyed. Second, they select the type of FAL APDU that will be used to convey the request or response and encode the service parameters into its body portion. Then they submit the encoded APDU body to the AR ASE for conveyance.

At the receiving user, they receive encoded APDU bodies from the AR ASE. They decode the APDU bodies and extract the service parameters conveyed by them. To conclude the conveyance, they deliver the service request or response to the user. Figure 10 illustrates these concepts.

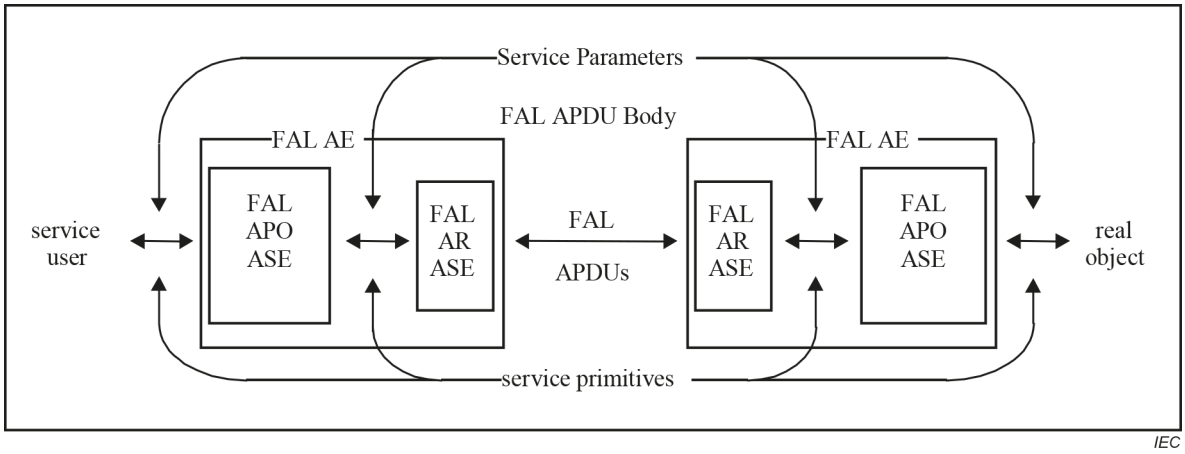

Figure 10 – ASE service conveyance

4.3.6.5 FAL presentation context

The presentation context in the OSI environment is used to distinguish the APDUs of one ASE from another, and to identify the transfer syntax rules used to encode each APDU. However, the fieldbus communications architecture does not include the presentation layer. Therefore, an alternate mechanism is provided for the FAL by each of the specific types of Communication Models.

Documents
Document Sharing Hub
Full document details: IEC 61158-5-4-2023

4.3.7 Application relationships

4.3.7.1 Definition of AR

ARs represent communication channels between APs. They define how information is communicated between APs. Each AR is characterized by how it conveys ASE service requests and responses from one AP to another. These characteristics are described below.

4.3.7.2 AR-endpoints

ARs are defined as a set of cooperating APs. The AR ASE in each AP manages an endpoint of the AR, and maintains its local context. The local context of an AR endpoint is used by the AR ASE to control the conveyance of APDUs on the AR.

4.3.7.3 AR-endpoint classes

ARs are composed of a set of endpoints of compatible classes. AR endpoint classes are used to represent AR endpoints that convey APDUs in the same way. Through the standardization of endpoint classes, ARs for different models of interaction can be defined.

4.3.7.4 AR cardinality

ARs characterize communications between APs. One of the characteristics of an AR is the number of AR endpoints in the AR. ARs that convey services between two APs have a cardinality of 1-to-1. Those that convey services from one AP to a number of APs have a cardinality of 1-to-many. Those that convey services from/to multiple APs have a cardinality of many-to-many.

4.3.7.5 Accessing objects through ARs

ARs provide access to APs and the objects within them through the services of one or more ASEs. Therefore, one characteristic is the set of ASE services that can be conveyed to and from these objects by the AR. The list of services that can be conveyed by the AR are selected from those defined for the AE.

4.3.7.6 AR conveyance paths

ARs are modeled as one or two conveyance paths between AR endpoints. Each conveyance path conveys APDUs in one direction between one or more AR endpoints. Each receiving AR endpoint for a conveyance path receives all APDUs transmitting on the AR by the sending AR endpoint.

4.3.7.7 AREP roles

Because APs interact with each other through endpoints, a basic determinant of their compatibility is the role that they play in the AR. The role defines how an AREP interacts with other AREPs in the AR.

For example, an AREP can operate as a client, a server, a publisher, or a subscriber. When an AREP interacts with another AREP on a single AR as both a client and a server, it is defined to have the role of "peer".

Certain roles can be capable of initiating service requests, while others can be capable only of responding to service requests. This part of the definition of a role identifies the requirement for an AR to be capable of conveying requests in either direction, or only in one direction.

Documents
Document Sharing Hub
Full document details: IEC 61158-5-4-2023

4.3.7.8 AREP buffers and queues

AREPs can be modeled as a queue or as a buffer. APDUs transferred over a queued AREP are delivered in the order received for conveyance. The transfer of APDUs over a buffered AREP is different. In this case, an APDU to be conveyed by the AR ASE is placed in a buffer for transfer. When the Data Link Layer gains access to the network, it transmits the contents of the buffer.

When the AR ASE receives another conveyance request, it replaces the previous contents of the buffer whether or not they were transmitted. Once an APDU is written into a buffer for transfer, it is preserved in the buffer until the next APDU to be transmitted replaces it. While in the buffer, an APDU can be read more than once without deleting it from the buffer or changing its contents.

At the receiving end, the operation is similar. The receiving endpoint places a received APDU into a buffer for access by the AR ASE. When a subsequent APDU is received, it overwrites the previous APDU in the buffer whether or not it was read. Reading the APDU from the buffer is not destructive — it does not destroy or change the contents of the buffer, allowing the contents to be read from the buffer one or more times.

4.3.7.9 User-triggered and scheduled conveyance

Another characteristic of an AREP is when they convey service requests and responses. AREPs that convey them upon submission by the user are called user-triggered. Their conveyance is asynchronous with respect to network operation.

AREPs that convey requests and responses at predefined intervals, regardless of when they are received for transfer are termed scheduled. Scheduled AREPs can be capable of indicating when transferred data was submitted late for transmission, or when it was submitted on time, but transmitted late.

4.3.7.10 AREP timeliness

AREPs convey APDUs between applications using the services of the Data Link Layer. When the timeliness capabilities are defined for an AREP and supported by the Data Link Layer, the AREP forwards the timeliness indicators provided by the Data Link Layer. These timeliness indicators make it possible for subscribers of published data to determine if the data they are receiving is up-to-date or "stale".

To support these types of timeliness, the publishing AREP establishes a publisher data link connection reflecting the type of timeliness configured for it by management. After connection establishment, the AREP receives user data and submits it to the DLL for transmission, where timeliness procedures are performed. When the Data Link Layer has the opportunity to transmit the data, it transmits the current timeliness status with the data.

At the subscriber AREP, a data link connection is opened to receive published data that reflects the type of timeliness configured for it by management. The Data Link Layer computes the timeliness of received data and then delivers it to the AREP. The data is then delivered to the user AP through the appropriate ASE.

4.3.7.11 Definition and creation of AREPs

AREP definitions specify instances of AREP classes. AREPs can be predefined or they can be defined using a "create" service if their AE supports this capability.

AREPs can be pre-defined and pre-established, or they can be pre-defined and dynamically established. Figure 11 depicts these two cases. AREPs also can require both dynamic definition and establishment or they can be dynamically defined such that they can be used without any establishment (they are defined in an established state).

Documents
Document Sharing Hub

Full document details: IEC 61158-5-4-2023

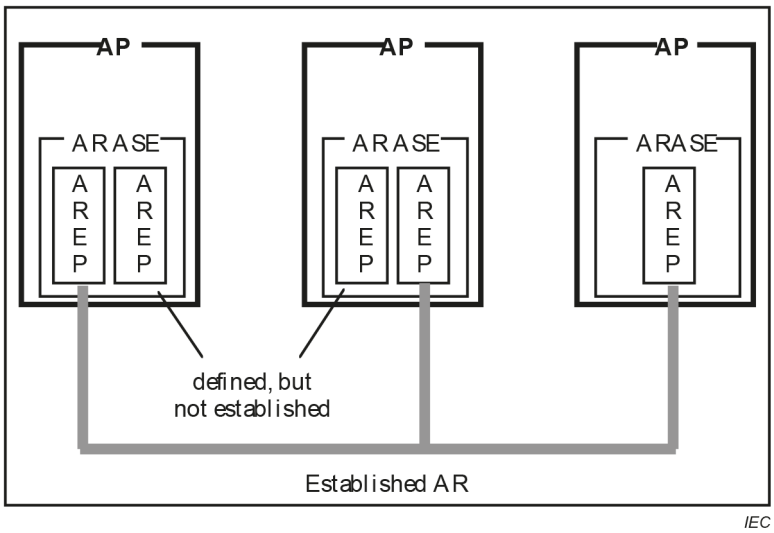

Figure 11 – Defined and established AREPs

4.3.7.12 AR establishment and termination

ARs can be established either before the operational phase of the AP or during its operation. When established during the operation of an AP, the AR is established through the exchange of AR APDUs.

Once an AR has been established, an AR can be terminated gracefully or it can be aborted, depending on the capabilities of the AR.

4.4 Fieldbus Application Layer naming and addressing

4.4.1 General

Subclause 4.4 refines the principles defined in ISO 7498-3 that involve the identification (naming) and location (addressing) of APOs referenced through the fieldbus Application Layer.

Subclause 4.4 defines how names and numeric identifiers are used to identify APOs accessible through the FAL. Subclause 4.4 also indicates how addresses from underlying layers are used to locate APs in the fieldbus environment.

4.4.2 Identifying objects accessed through the FAL

4.4.2.1 General

APOs accessed through the FAL are identified independent of their location. That is, if the location of the AP that contains the APO changes, the APO can still be referenced using the same set of identifiers.

Identifiers for APs and APOs within the FAL are defined as key attributes in the class definitions for APOs. Within these APO definitions, two types of key attributes are commonly used, names and numeric identifiers.

4.4.2.2 Names

Names are string-oriented identifiers. They are defined to permit APs and APOs to be named within the system where they are used. Therefore, although the scope of the name of an APO is specific to the AP in which it resides, the assignment of the name is administered within the system in which it is configured.

Documents
Document Sharing Hub
Full document details: IEC 61158-5-4-2023

Names can be descriptive, although they do not have to be. Descriptive names make it possible to provide meaningful information, such as its use, about the object they name.

Names can also be coded. Coded names make it possible to identify an object using a short, compressed form of a name. They are typically simpler to transfer and process, but not as easy to understand as descriptive names.

4.4.2.3 Numeric identifiers

Numeric identifiers are identifiers whose values are numbers. They are designed for efficient use within the fieldbus system, and can be assigned for efficient access to APOs by their AP.

4.4.3 Addressing APs accessed through the FAL

Fieldbus addresses represent the network locations of APs. Addresses relevant to the FAL are the addresses of the underlying layers that are used to locate the AREPs of an AP.

4.5 Architecture summary

The summary of the FAL architecture is presented in 4.5. Figure 12 illustrates the major components of the FAL architecture and how they relate to each other.

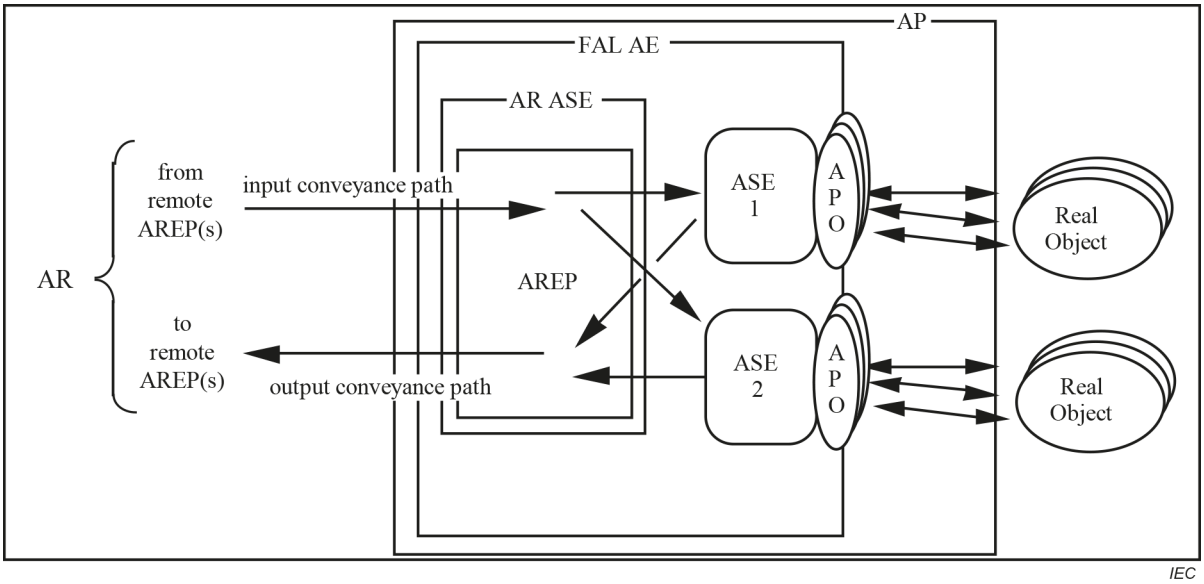

Figure 12 – FAL architectural components

Figure 12 depicts an AP that communicates through the FAL AE. The AP represents its internal real objects as APOs for remote access to them. Two ASEs are shown that provide the remote access services to their related APOs. The AR ASE contains a single AREP that conveys service requests and responses for the ASEs to one or more remote AREPs located in remote APs.

4.6 FAL service procedures

4.6.1 FAL confirmed service procedures

The requesting user submits a confirmed service request primitive to its FAL. The appropriate FAL ASE builds the related confirmed service request APDU Body and conveys it on the specified AR.

Documents
Document Sharing Hub
Full document details: IEC 61158-5-4-2023

Upon receipt of the confirmed service request APDU Body, the responding ASE decodes it. If a protocol error did not occur, the ASE delivers a confirmed service indication primitive to its user.

If the responding user is able to successfully process the request, the user returns a confirmed service response (+) primitive.

If the responding user is unable to successfully process the request, the service fails and the user issues a confirmed service response (-) primitive indicating the reason.

The responding ASE builds a confirmed service response APDU Body for a confirmed service response (+) primitive or a confirmed service error APDU Body for a confirmed service response (–) primitive and conveys it on the specified AR.

Upon receipt of the returned APDU Body the initiating ASE delivers a confirmed service confirmation primitive to its user which specifies success or failure, and the reason for failure if a failure occurred.

4.6.2 FAL unconfirmed service procedures

The requesting user submits an unconfirmed service request primitive to its FAL AE. The appropriate FAL ASE builds the related unconfirmed service request APDU Body and conveys it on the specified AR.

Upon receipt of the unconfirmed request APDU Body, the receiving ASE(s) participating in the AR delivers the appropriate unconfirmed service indication primitive to its user. Timeliness parameters are included in the indication primitive if the AR that conveyed the APDU Body supports timeliness.

4.7 Common FAL attributes

In the specifications of the FAL classes that follow, many classes use the following attributes. Therefore, these attributes are defined here instead of with the other attributes for each of the classes, except for the Data Type class.

ATTRIBUTES:

1	(o)	Key Attribute:	Numeric Identifier
2	(o)	Key Attribute:	Name
3	(o)	Attribute:	User Description
4	(o)	Attribute:	Object Revision

1) Numeric Identifier

   This optional key attribute specifies the numeric id of the object. It is used as a shorthand reference by the FAL protocol to identify the object. There are three possibilities for identification purposes: numeric identifier or name or both. This attribute is required for the Data Type model.

2) Name

   This optional key attribute specifies the name of the object. There are three possibilities for identification purposes: numeric identifier or name or both.

3) User description

   This optional attribute contains user defined descriptive information about the object.

Documents
Document Sharing Hub
Full document details: IEC 61158-5-4-2023

4) Object revision

This optional attribute specifies the revision level of the object. It is a structured attribute composed of major and minor revision numbers. If Object Revision is supported, it contains both a Major Revision and a Minor Revision with a value range 0 to 15 for each. The use of major/minor fields is intended to provide the following features:

– Major revision

The Major Revision field contains the major revision value for the object. A change to the major revision indicates that interoperability is affected by the change.

– Minor revision

The Minor Revision field contains the minor revision value for the object. A change to the minor revision indicates that interoperability was not affected by the change -- that is users of the object will continue to be capable of interoperating with the object when its minor revision is changed, provided that the major revision remains the same.

4.8 Common FAL service parameters

In the specifications of the FAL services that follow, many services use the following parameters. Therefore, they are defined here instead of with the other parameters for each of the services.

– AREP

This parameter contains sufficient information to locally identify the AREP to be used to convey the service. This parameter can use a key attribute of the AREP to identify the application relationship. When an AREP supports multiple contexts (established using the Initiate service) at the same time, the AREP parameter is extended to identify the context as well as the AREP.

– Invoke ID

This parameter identifies this invocation of the service. It is used to associate service requests with responses. Therefore, no two outstanding service invocations can be identified by the same Invoke ID value.

– FAL ASE/FAL class

This parameter specifies the FAL ASE (e.g. AP, AR, Variable, Data Type, Event, Function Invocation, Load Region) and the FAL Class within the ASE (e.g. AREP, Variable List, Notifier, Action).

– Numeric ID

This parameter is the numeric identifier of the object.

– Error info

This parameter provides error information for service errors. It is returned in confirmed service response(-) primitives. It is composed of the following elements.

- Error class

  This parameter indicates the general class of error. Valid values are specified in the definition of Error Code parameter, below.

- Error code

  This parameter identifies the specific service error.

- Additional code

  This optional parameter identifies the error encountered when processing the request specific to the object being accessed. When used, the value submitted in the response primitive is delivered unchanged in the confirmation primitive.

- Additional detail

  This optional parameter contains user data that accompanies the negative response. When used, the value submitted in the response primitive is delivered unchanged in the confirmation primitive.

AVA Documents
Document Sharing Hub

4.9 APDU size

APDU size is Communication Model dependent.

5 Type 4 communication model specification

5.1 Concepts

5.1.1 Overview

The concepts of this model basically follow the common concepts with a few exceptions. The basic principle described in 4.2.2.1 through 4.2.2.3 are applicable for Clause 5. This Type supports Gateway functionality within the application layer. Part of this can also be recognised from the common concepts. However, to promote readability, some elements from Clause 4 are repeated in Clause 5.

5.1.2 Application entities

5.1.2.1 Definition of FAL AE

An FAL AE provides a set of services to enable communications between APs in a fieldbus environment. These services enable a user application in a Client to access user objects in a server.

The functionality of the FAL AE can be divided into two groups.

Application Relation (AR). The AR functionality is responsible for arranging the transportation of APDUs via the network.

Variable Access (VA). The Variable Access functionality is responsible for coding and encoding of APDUs. In a server the VA also convey data directly to / from user objects. How this is done is a local matter and out of scope for this document.

5.1.2.2 FAL services

The services offered by the FAL AE to the user application are called FAL Services. Services for the AR are called AR ASE services and services for the Variable Access are called Route Endpoint ASE services (REP ASE services).

The FAL services provide access to local AR objects, and provide conveyance of requests and responses for access to real objects modelled as FAL accessible objects. The FAL provides as well confirmed as unconfirmed services. Service requests are conveyed to the AP containing the real object.

Figure 13 illustrates the FAL AE and the architectural relationships.

Documents
Document Sharing Hub
Full document details: IEC 61158-5-4-2023

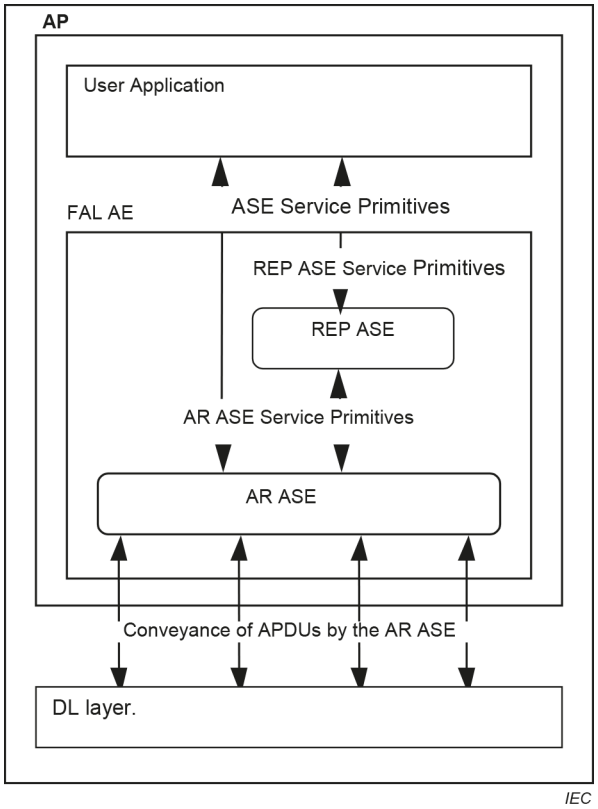

Figure 13 – FAL AE

5.1.2.3 AR ASE

To support access to the remote AP, the Application Relationship ASE is defined. It provides services to the AP for accessing communication-related parameters, and it provides services to the REP ASE for conveying service requests and responses.

The AR ASE provides services at the endpoints of ARs (AREPs).

5.1.2.4 REP ASE

The REP ASE provides a set of services used to read and write network visible attributes of Variable Objects and their application data. As only one ASE type is used remotely, the type is implicit and not transferred.

5.1.2.5 FAL service conveyance and gateway

The FAL AE provides services to convey requests and responses between User Applications and Variable Objects including Gateway functionality.

In a distributed system, application processes communicate with each other by exchanging application layer messages. The AR is defined to support the on-demand exchange of confirmed and unconfirmed services between two application processes. Connectionless data link services are used for the exchanges. The data link layer transfers can be either acknowledged or unacknowledged.

Documents
Document Sharing Hub
Full document details: IEC 61158-5-4-2023

5.1.2.6 Application relationships

5.1.2.6.1 Definition of AR

The AR is responsible for conveying messages between applications. The messages that are conveyed are FAL service requests and responses. Each service request and response is submitted to the AR ASE for transfer. Within the AR only one object type exist, the AR-Endpoint (AREP).

5.1.2.6.2 AR-endpoints

An AR-Endpoint (AREP) represents a service access point to a DLE within the AE. The AR Send Service conveys APDU and route information to the AREP and implicit to the DLE. The AREP is a system management object presenting the user configurable parameters of the related DLE.

This Type has no special system management services, because the attributes of the AREP objects are declared as Variable Objects by the user application. This makes the attributes network visible. The AR Get Attribute and AR Set Attribute services are used by these Variable Objects to access the attribute values.

When an AREP receives an APDU from its DLE (User-triggered) it conveys the APDU to the REP ASE or an AREP (gateway).

5.1.3 Gateway and routing

5.1.3.1 Overview

This Type supports gateway functionality. To identify the destination of a request, a route description is used. This route description holding a complete list of points to pass is sent with the request. On its way to the destination, the route evolves in such a way that it always contains the route back to the requester and the route to the destination. The elements in the route are endpoint and DL addresses.

5.1.3.2 Route endpoint

Within the REP ASE, Route Endpoint objects (REPs) represent endpoints, holding a Route description. An REP represents the starting point for conveying a message. An REP also represents the destination of the APDU.

5.1.3.3 Identification of endpoints

The endpoints are identified by endpoint addresses. These EP addresses are numerical Addresses, taken within an AE from the same name space of numbers, to achieve a unique identification. These EP addresses are used to identify AREPs and REPs.

5.1.3.4 DL addresses

The DLE is identified from the Link by a DL-address. DL-addresses are defined in IEC 61158-4-4, but as they are part of the route, they are mentioned here. There is a one to one relation between the DL-address of a DLE and the endpoint address of the corresponding AREP.

5.1.3.5 Route

The complete Route contains a Destination-Route and a Source-Route.

The Destination-Route describes how to reach the destination REP. It is a sequence of Endpoint addresses and DL-addresses. On its way to the destination, the first element always indicates the address of the receiving DLE, AREP or REP.

AVA Documents
Document Sharing Hub

Full document details: IEC 61158-5-4-2023

The Source Route in the same way describes how to find the way back to the endpoint that initiated the request. It is a sequence of endpoint addresses and DL-addresses. On its way to the destination, the first element always indicates the address of the transmitting DLE, AREP or REP.

5.1.3.6 Destination /source route conversion

A Destination-Route conveyed by an REP is starting with the endpoint address of the local AREP. The next element is the DL-address of the receiving DLE. If the route goes through gateways a pair of addresses shall be added for each gateway, a DL-address and an AREP address. The final address is the endpoint address of the destination REP. The Source address is the endpoint address of the source REP.

The AR Send service removes the first element of the Destination-Route. The DLE inserts its own DL-address in front of the current Source Route before conveying the request to the link.

When a DLE receives an indication from the link, it removes the first element of the Destination Route (its own DL-address). The corresponding AREP inserts its own AREP address in front of the current Source Route before conveying the request to a REP or an AREP.

At the destination REP the Destination-Route holds the endpoint address of the REP, and the Source Route holds the complete route back to the requesting REP.

If any error appears with a request on its way to the destination, the current Source Route can be used for returning an error response.

5.1.4 Architecture summary

A summary of the FAL architecture is presented in Figure 14. It illustrates the major components of the FAL architecture and how they relate to each other.

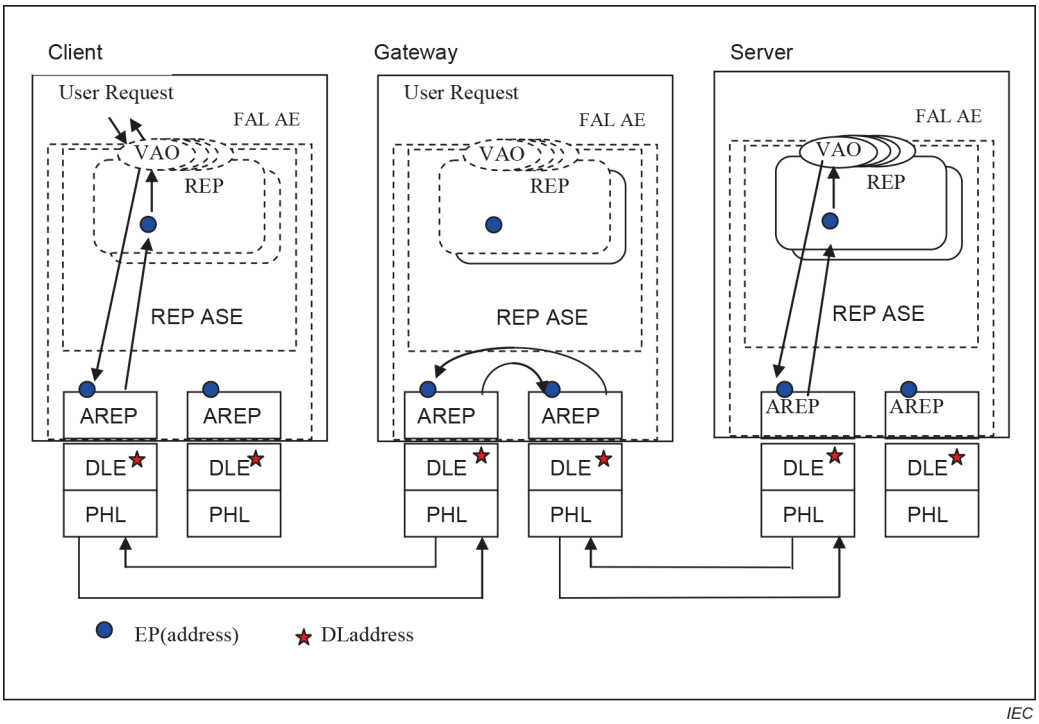

Figure 14 – Summary of the FAL architecture

Documents
Document Sharing Hub
Full document details: IEC 61158-5-4-2023

5.1.5 FAL service procedures and time sequence diagrams

5.1.5.1 Overview

Subclause 5.1.5 describes service procedures for FAL confirmed and unconfirmed services. An overview of the FAL service procedures is given in Figure 15.

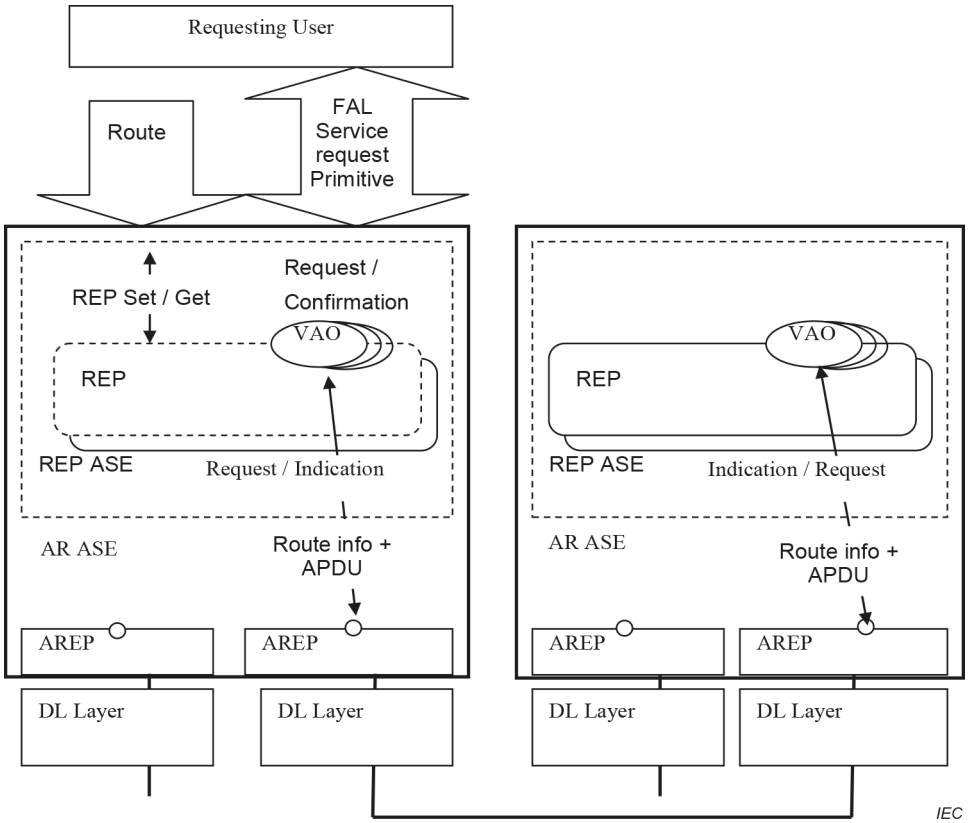

Figure 15 – FAL service procedure overview

5.1.5.2 FAL confirmed service procedures

– At requesting AP:

  The user application uses the REP ASE service "Reserve REP" to reserve a REP. The user application then uses the REP ASE service "Set REP Attribute" to set attributes of the REP, including the Destination Route to the remote REP.

  The requesting user submits a confirmed request primitive to the REP ASE with the REP address as a parameter. The REP ASE builds the related confirmed request APDU and conveys it on the AREP, using an AR Send request primitive. The AREP address is indicated by the first element of the Destination route. The REP ASE starts an associated timer to monitor the request.

  The AREP builds a request DLSDU and submits the route info together with the DLSDU to its DLE. The DLE sends the DLSDU at the first opportunity.

– At responding server AP:

  Upon receipt of the DLSDU, the receiving AREP builds an APDU and delivers the APDU and the received Route to the addressed REP by an AR Send indication primitive.

  The REP ASE handles the indication by data exchange with the addressed Variable Object, builds the related unconfirmed response APDU and conveys it on the AREP, using an AR Send request primitive. The received Source route is used as Destination route for the response.

Documents
Document Sharing Hub
Full document details: IEC 61158-5-4-2023

The AREP builds a request DLSDU and submits the route info, together with the DLSDU to its DLE. It is the task of the DL layer to decide whether to "queue" the DLSDU or send it immediately.

If the REP ASE is not able to process the indication and respond within "MaxIndicationDelay", the REP ASE shall submit an AR Acknowledge request primitive to the receiving AREP, and in this way free the Token. The AR Acknowledge is submitted to the DLE.

– At requesting AP receiving the response:

Upon receipt of the response DLSDU, the receiving AREP conveys the response to the REP ASE. The destination address conveyed to the REP ASE holds the endpoint address of the requesting REP. The REP object can now deliver the response to the requesting user application. This is accomplished by the user invocation of the REP ASE RESPONSE Service.

If the timer expires before the requesting REP has received the response, the REP cancels the associated transaction state machine and delivers the Error response "No answer" to the user application.

5.1.5.3 Confirmed service time sequence diagram

Figure 16 shows the time sequence diagram for the confirmed services.

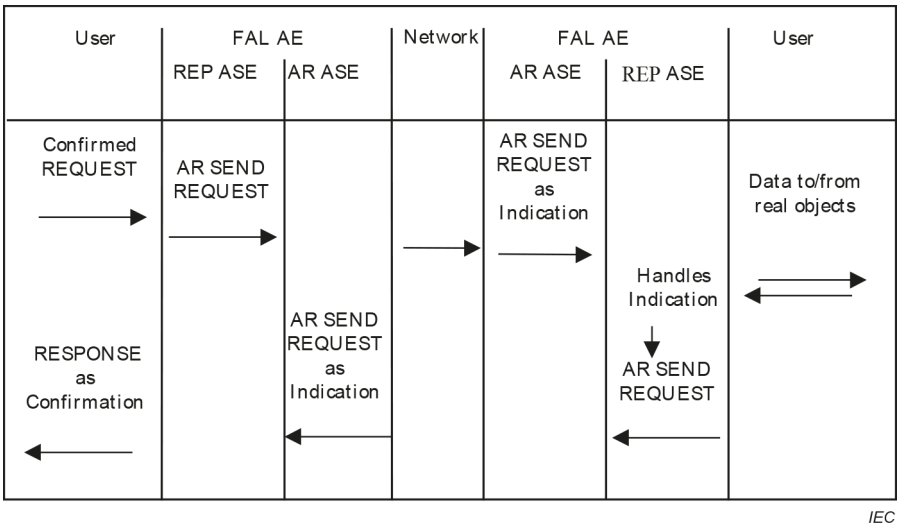

Figure 16 – Time sequence diagram for the confirmed services

5.1.5.4 Unconfirmed request service procedure

– At requesting AP:

The user application uses the REP ASE service "Reserve REP" to reserve a REP. The user application then uses the REP ASE service "Set REP Attribute" to set attributes of the REP, including the Destination Route to the remote REP.

The requesting user submits an unconfirmed request primitive to the REP ASE with the REP address as a parameter. The REP ASE builds the related unconfirmed request APDU and conveys it on the AREP, using an AR Send request primitive. The AREP address is indicated by the first element of the Destination route.

The AREP builds a request DLSDU and submits the route info together with the DLSDU to its DLE. The DLE sends the DLSDU at the first opportunity.

– At responding server AP:

Upon receipt of the DLSDU, the receiving AREP builds an APDU and delivers that and the received Route to the addressed REP by an AR Send indication primitive.

The REP ASE handles the indication by data exchange with the addressed Variable Object.

AVA Documents Document Sharing Hub

5.1.5.5 Unconfirmed service time sequence diagram

Figure 17 shows the time sequence diagram for the unconfirmed services.

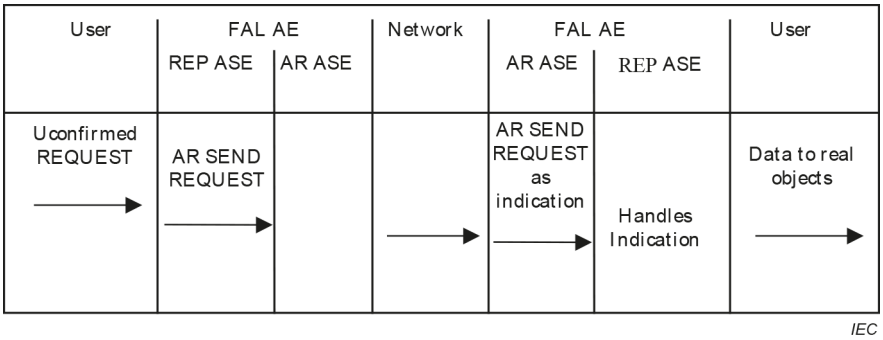

Figure 17 – Time sequence diagram for unconfirmed services

5.1.5.6 Confirmed / unconfirmed service procedure through gateways

Upon receipt of a DLSDU, the receiving AREP delivers an AR Send indication primitive to the local destination. If the endpoint address is a REP address, the APDU + Route is delivered to the REP ASE. If the endpoint address is an AREP address, the AR send service is used to pass it on to the network (Gateway).

For confirmed service Request, an AR Acknowledge is submitted to the "source AREP" unless the response is expected within "MaxIndicationDelay". "MaxIndicationDelay" is an attribute of the "source AREP".

5.2 Variable ASE

5.2.1 Variable types

5.2.1.1 Overview

The Variable ASE specifies the machine independent syntax for application data conveyed by FAL services. The application layer supports the transfer of both basic and constructed variables. The encoding rules for basic variables and constructed variables as specified in 5.2 are provided in IEC 61158-6-4.

Variable Objects (VAOs) are defined as instances of a variable class. The Variable ASE provides access to VAOs. VAOs are identified by a numeric Variable Identifier, and are instances of a variable class.

Basic types are atomic types that cannot be decomposed into more elemental types. Constructed types are types composed of basic types and other constructed types. Their complexity and depth of nesting is free.

Constructed types are packed according to the encoding rules for constructed types. The structure of a constructed type is not network visible. The structure of a constructed type is generated by a compiler and transferred by other means.

All variable classes have the common attributes Variable Identifier, Data Type Identifier, Octet length, Read enable, Write enable and Write protected. All variable classes have the common services Read, Write, Get Variable Attribute and Set Variable Attribute.

This document recommends using floating point representation of measurement values scaled in SI units.

Documents
Document Sharing Hub
Full document details: IEC 61158-5-4-2023