IEC 61162-2

Edition 2.0 2024-04
COMMENTED VERSION

INTERNATIONAL STANDARD

colour inside

Maritime navigation and radiocommunication equipment and systems – Digital interfaces – Part 2: Single talker and multiple listeners, high-speed transmission

IEC 61162-2:2024-04 CMV(en)

AVA Documents
Document Sharing Hub

Full document details: IEC 61162-2 2024 CMV

THIS PUBLICATION IS COPYRIGHT PROTECTED
Copyright © 2024 IEC, Geneva, Switzerland

All rights reserved. Unless otherwise specified, no part of this publication may be reproduced or utilized in any form or by any means, electronic or mechanical, including photocopying and microfilm, without permission in writing from either IEC or IEC's member National Committee in the country of the requester. If you have any questions about IEC copyright or have an enquiry about obtaining additional rights to this publication, please contact the address below or your local IEC member National Committee for further information.

IEC Secretariat
3, rue de Varembé
CH-1211 Geneva 20
Switzerland

Tel.: +41 22 919 02 11
info@iec.ch
www.iec.ch

About the IEC
The International Electrotechnical Commission (IEC) is the leading global organization that prepares and publishes International Standards for all electrical, electronic and related technologies.

About IEC publications
The technical content of IEC publications is kept under constant review by the IEC. Please make sure that you have the latest edition, a corrigendum or an amendment might have been published.

IEC publications search - webstore.iec.ch/advsearchform
The advanced search enables to find IEC publications by a variety of criteria (reference number, text, technical committee, …). It also gives information on projects, replaced and withdrawn publications.

IEC Just Published - webstore.iec.ch/justpublished
Stay up to date on all new IEC publications. Just Published details all new publications released. Available online and once a month by email.

IEC Customer Service Centre - webstore.iec.ch/csc
If you wish to give us your feedback on this publication or need further assistance, please contact the Customer Service Centre: sales@iec.ch.

IEC Products & Services Portal - products.iec.ch
Discover our powerful search engine and read freely all the publications previews, graphical symbols and the glossary. With a subscription you will always have access to up to date content tailored to your needs.

Electropedia - www.electropedia.org
The world's leading online dictionary on electrotechnology, containing more than 22 500 terminological entries in English and French, with equivalent terms in 25 additional languages. Also known as the International Electrotechnical Vocabulary (IEV) online.

Documents
Document Sharing Hub

Full document details: IEC 61162-2 2024 CMV

IEC 61162-2

Edition 2.0 2024-04
COMMENTED VERSION

INTERNATIONAL STANDARD

colour inside

Maritime navigation and radiocommunication equipment and systems – Digital interfaces – Part 2: Single talker and multiple listeners, high-speed transmission

INTERNATIONAL
ELECTROTECHNICAL
COMMISSION

ICS 47.020.70

ISBN 978-2-8322-8713-2

Warning! Make sure that you obtained this publication from an authorized distributor.

® Registered trademark of the International Electrotechnical Commission

Documents
Document Sharing Hub

Full document details: IEC 61162-2 2024 CMV

CONTENTS

FOREWORD 4
~~1 General ....~~
1 Scope 6
2 Normative references 6
3 Terms, definitions and abbreviated terms 7
3.1 Terms and definitions 7
3.2 Abbreviated terms 7
4 Manufacturer's documentation 7
4.1 Standard documents 7
4.2 Additional information 8
5 Hardware specification 8
5.1 General 8
5.2 Interconnecting wires 8
5.3 Conductor definitions 8
5.4 Electrical connection/shield requirements 8
5.5 Connector 9
5.6 Electrical signal characteristics 9
5.6.1 Signal state definitions 10
5.6.2 Talker drive circuits 10
5.6.3 Listener receive circuits 10
5.6.4 Electrical isolation 10
5.6.5 Maximum voltage on the bus 10
6 Data transmission 10
7 Data format protocol 11
~~5.1 Characters ....~~
~~5.2 Fields ....~~
~~5.3 Sentences ....~~
~~5.4 Error detection and handling ....~~
8 Data content 16
9 Applications 16
10 Methods of testing and required test results 16
10.1 Test preparation 16
10.1.1 General 16
10.1.2 Testing under ambient conditions 16
10.2 Test sequence 16
10.3 Standard test signals 16
10.4 Test of the interface 17
10.4.1 Electrical test of the interface 17
10.4.2 Protocol test of input and output 17
10.4.3 Test under maximum interface workload 17
~~Annex A (informative) IMO resolutions and ITU recommendations and relevant IEC/ISO standards to which this standard applies for maritime navigation and radiocommunication equipment and systems ....~~
~~Annex B (informative) Glossary ....~~
Bibliography 28
List of comments 29

AVA Documents
Document Sharing Hub
Full document details: IEC 61162-2 2024 CMV

Figure 1 – Talker/listener connections.....8
Figure 2 – Cables – Electrical shield requirements 9
Figure 3 – Data transmission format 10

~~Table A.1 – Navigation .....~~
~~Table A.2 – Radiocommunications for the global maritime distress and safety system (GMDSS) .....~~

Documents
Document Sharing Hub

Full document details: IEC 61162-2 2024 CMV

INTERNATIONAL ELECTROTECHNICAL COMMISSION

MARITIME NAVIGATION AND RADIOCOMMUNICATION EQUIPMENT AND SYSTEMS – DIGITAL INTERFACES –

Part 2: Single talker and multiple listeners, high-speed transmission

FOREWORD

1) The International Electrotechnical Commission (IEC) is a worldwide organization for standardization comprising all national electrotechnical committees (IEC National Committees). The object of IEC is to promote international co-operation on all questions concerning standardization in the electrical and electronic fields. To this end and in addition to other activities, IEC publishes International Standards, Technical Specifications, Technical Reports, Publicly Available Specifications (PAS) and Guides (hereafter referred to as "IEC Publication(s)"). Their preparation is entrusted to technical committees; any IEC National Committee interested in the subject dealt with may participate in this preparatory work. International, governmental and non-governmental organizations liaising with the IEC also participate in this preparation. IEC collaborates closely with the International Organization for Standardization (ISO) in accordance with conditions determined by agreement between the two organizations.

2) The formal decisions or agreements of IEC on technical matters express, as nearly as possible, an international consensus of opinion on the relevant subjects since each technical committee has representation from all interested IEC National Committees.

3) IEC Publications have the form of recommendations for international use and are accepted by IEC National Committees in that sense. While all reasonable efforts are made to ensure that the technical content of IEC Publications is accurate, IEC cannot be held responsible for the way in which they are used or for any misinterpretation by any end user.

4) In order to promote international uniformity, IEC National Committees undertake to apply IEC Publications transparently to the maximum extent possible in their national and regional publications. Any divergence between any IEC Publication and the corresponding national or regional publication shall be clearly indicated in the latter.

5) IEC itself does not provide any attestation of conformity. Independent certification bodies provide conformity assessment services and, in some areas, access to IEC marks of conformity. IEC is not responsible for any services carried out by independent certification bodies.

6) All users should ensure that they have the latest edition of this publication.

7) No liability shall attach to IEC or its directors, employees, servants or agents including individual experts and members of its technical committees and IEC National Committees for any personal injury, property damage or other damage of any nature whatsoever, whether direct or indirect, or for costs (including legal fees) and expenses arising out of the publication, use of, or reliance upon, this IEC Publication or any other IEC Publications.

8) Attention is drawn to the Normative references cited in this publication. Use of the referenced publications is indispensable for the correct application of this publication.

9) IEC draws attention to the possibility that the implementation of this document may involve the use of (a) patent(s). IEC takes no position concerning the evidence, validity or applicability of any claimed patent rights in respect thereof. As of the date of publication of this document, IEC had not received notice of (a) patent(s), which may be required to implement this document. However, implementers are cautioned that this may not represent the latest information, which may be obtained from the patent database available at https://patents.iec.ch. IEC shall not be held responsible for identifying any or all such patent rights.

This commented version (CMV) of the official standard IEC 61162-2:2024 edition 2.0 allows the user to identify the changes made to the previous IEC 61162-2:1998 edition 1.0. Furthermore, comments from IEC TC 80 experts are provided to explain the reasons of the most relevant changes, or to clarify any part of the content.

A vertical bar appears in the margin wherever a change has been made. Additions are in green text, deletions are in strikethrough red text. Experts' comments are identified by a blue-background number. Mouse over a number to display a pop-up note with the comment.

This publication contains the CMV and the official standard. The full list of comments is available at the end of the CMV.

Documents
Document Sharing Hub

Full document details: IEC 61162-2 2024 CMV

IEC 61162-2 has been prepared by IEC technical committee 80: Maritime navigation and radiocommunication equipment and systems. It is an International Standard.

This second edition cancels and replaces the first edition published in 1998. This edition constitutes a technical revision.

This edition includes the following significant technical changes with respect to the previous edition:

a) alternative hardware is given in 5.1 which may now be as specified in this document or as specified in IEC 61162-1;
b) the data transmission rate given in Clause 6 is now configurable. The default remains as 38 400 (bits/s) but higher rates may be provided;
c) the description of the data format protocol has been removed as this information is given in IEC 61162-1;
d) former Annex A and Annex B have been deleted as now of historic interest.

The text of this International Standard is based on the following documents:

Draft	Report on voting
80/1065/CDV	80/1083/RVC

Full information on the voting for its approval can be found in the report on voting indicated in the above table.

The language used for the development of this International Standard is English.

This document was drafted in accordance with ISO/IEC Directives, Part 2, and developed in accordance with ISO/IEC Directives, Part 1 and ISO/IEC Directives, IEC Supplement, available at www.iec.ch/members_experts/refdocs. The main document types developed by IEC are described in greater detail at www.iec.ch/publications.

The committee has decided that the contents of this document will remain unchanged until the stability date indicated on the IEC website under webstore.iec.ch in the data related to the specific document. At this date, the document will be

- reconfirmed,
- withdrawn, or
- revised.

IMPORTANT – The "colour inside" logo on the cover page of this document indicates that it contains colours which are considered to be useful for the correct understanding of its contents. Users should therefore print this document using a colour printer.

Documents
Document Sharing Hub

Full document details: IEC 61162-2 2024 CMV

MARITIME NAVIGATION AND RADIOCOMMUNICATION EQUIPMENT AND SYSTEMS – DIGITAL INTERFACES –

Part 2: Single talker and multiple listeners, high-speed transmission

~~1 General~~

1 Scope

This part of IEC 61162 contains the requirements for data communication between maritime electronic instruments, navigation and radiocommunication equipment when interconnected via an appropriate interface.

This document is intended to support one-way serial data transmission from a single talker to one or more listeners. This data is in printable ASCII form and ~~may~~ can include any information as specified by approved sentences or information coded according to the rules for proprietary sentences. Typical messages ~~may~~ can be from 11 to a maximum of 79 characters in length and generally require repetition rates up to once per 20 ms.

The electrical definitions in this document are intended to accommodate higher data rates than are specified in IEC 61162-1. Since there is no provision for guaranteed delivery of messages and only limited error-checking capability, it is important this document ~~should be~~ is used with caution in all safety applications.

~~Annex A contains a list of relevant IMO resolutions and ITU recommendations to which this standard applies.~~ 1

2 Normative references

The following documents are referred to in the text in such a way that some or all of their content constitutes requirements of this document. For dated references, only the edition cited applies. For undated references, the latest edition of the referenced document (including any amendments) applies.

IEC 60945~~:1996~~, *Maritime navigation and radiocommunication equipment and systems – General requirements – Methods of testing and required test results*

IEC 61162-1~~:1995~~, *Maritime navigation and radiocommunication equipment and systems – Digital interfaces – Part 1: Single talker and multiple listeners*

ITU-T Recommendation X.27/V.11~~:1996~~, *Electrical characteristics for balanced double-current interchange circuits operating at data signalling rates up to 10 Mbits/s*

~~NMEA 0183 – Version 2.30:1998, *National marine electronics association (USA) – Standard for interfacing marine electronic navigational devices*~~ 2

~~EIA 485:1991, *Electrical characteristics of generators and receivers for use in balanced digital multipoint systems*~~ 2

Documents
Document Sharing Hub
Full document details: IEC 61162-2 2024 CMV

3 Terms, definitions and abbreviated terms

~~Common terms are defined in the glossary of annex B. Where there is a conflict, terms shall be interpreted, wherever possible, in accordance with the references in 1.2.~~

For the purposes of this document, the following terms and definitions apply.

ISO and IEC maintain terminology databases for use in standardization at the following addresses:

- IEC Electropedia: available at https://www.electropedia.org/
- ISO Online browsing platform: available at https://www.iso.org/obp

3.1 Terms and definitions

3.1.1
talker
~~any~~ device which sends data to other devices

Note 1 to entry: The type of talker is identified by a two-character mnemonic as listed in IEC 61162-1.

3.1.2
listener
~~any~~ device which receives data from another device

3.1.3
latency
time interval between an event and its resulting information, including time for processing, transmission and/or reception

3.2 Abbreviated terms 3

EMC electromagnetic compatibility

EUT equipment under test

4 Manufacturer's documentation

4.1 Standard documents

~~Operator~~ Installation manuals ~~or other appropriate literature~~ 4 provided for equipment that is intended to meet the requirements of this document shall contain as a minimum the following information:

a) identification of the A, B and common (C) signal lines (see Figure 1);

b) the output drive capability as a talker;

c) a list of approved sentences, noting unused fields, proprietary sentences transmitted as a talker, data latency and transmission interval for each sentence;

d) the load requirements as a listener;

e) a list of sentences and associated data fields that are required by, or are acceptable to, a listener;

f) the current software and hardware revision, if this is relevant to the interface;

g) an electrical description or schematic of the listener/talker input/output circuits citing actual components and devices used, including connector type and part number;

h) the version number and date of update of the standard for which compliance is sought;

i) list of supported baud rates (bits/s) including any limitations per each baud rate supported. 5

AVA Documents
Document Sharing Hub

Full document details: IEC 61162-2 2024 CMV

4.2 Additional information

As latency, filtering, error handling and data transmission interval can have a serious influence on the performance of a system, the manufacturer shall ~~give careful consideration to~~ consider these aspects. Documentation should include such data where applicable.

5 Hardware specification

5.1 General

One talker and multiple listeners may be connected in parallel over interconnecting wires. Because of EMC requirements, shielded cables are recommended. The number of listeners depends on the output capability, the input drive requirements of the connected devices, and on the use of termination resistors.

Two alternatives apply for the hardware:

1) method based on 5.2 to 5.6;
2) method based on IEC 61162-1. 6

5.2 Interconnecting wires

Interconnection between devices may be by means of a shielded two-conductor twisted-pair wire (A, B) plus any means to secure common signal ground potential (C) for transmitting and receiving devices. For this purpose, a third wire additional to the twisted pair or the inner shield of double-shielded cable with insulated shields may be used.

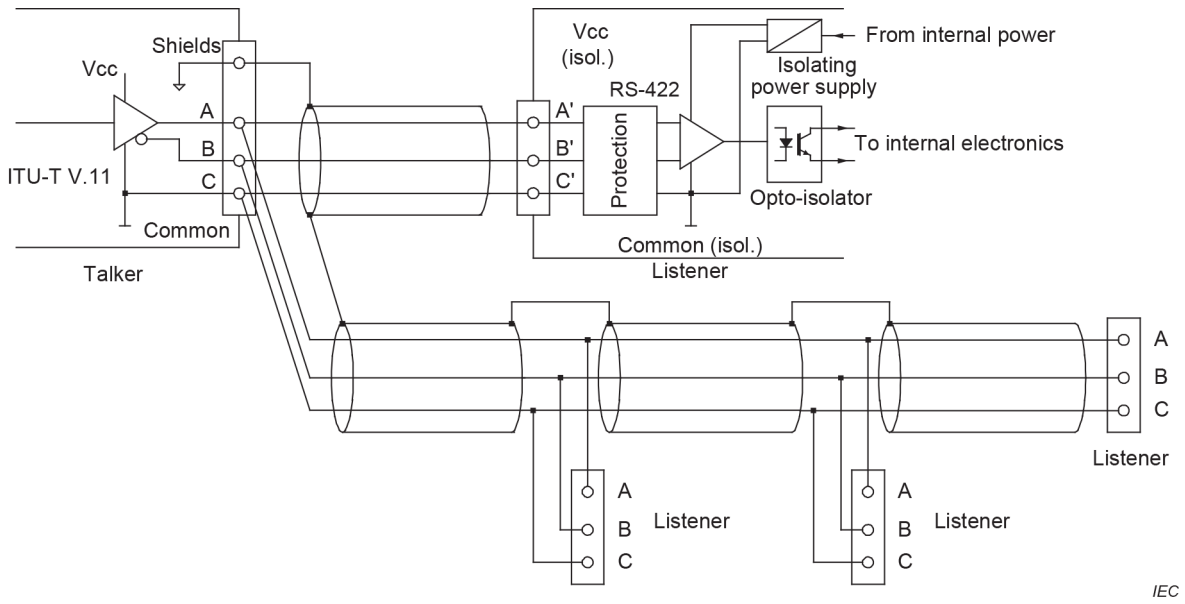

Figure 1 – Talker/listener connections

5.3 Conductor definitions

The conductors referred to in this document are the signal lines A, B, C (common) and shield.

5.4 Electrical connection/shield requirements

All signal and common line connections A, B and C are connected in parallel.

Documents
Document Sharing Hub
Full document details: IEC 61162-2 2024 CMV

With single-shielded cables and a separate wire as common line C (signal ground), the shield shall be connected to the talker chassis and shall not be connected to any listener. However, the shield shall be continuous (unbroken) between all listeners – see Figure 1 and Figure 2 a).

With double-shielded cables and the inner shield used as common line C (signal ground), the outer shield shall be connected to the talker chassis and shall not be connected to any listener. However, the outer shield shall be continuous (unbroken) between all listeners – see Figure 1 and Figure 2 b).

With double-shielded cables and a separate wire as common line C (signal ground), the inner shield shall be connected to the talker chassis and shall not be connected to any listener. However, the inner shield shall be continuous (unbroken) between all listeners. The outer shield may be connected to the chassis on either side if required – see Figure 1 and Figure 2 c).

The cabling shall be designed in a way that stubs are avoided or kept as short as possible. If long cables are necessary, termination at the end of the line according to ITU-T Recommendation X.27/V.11 shall be considered.

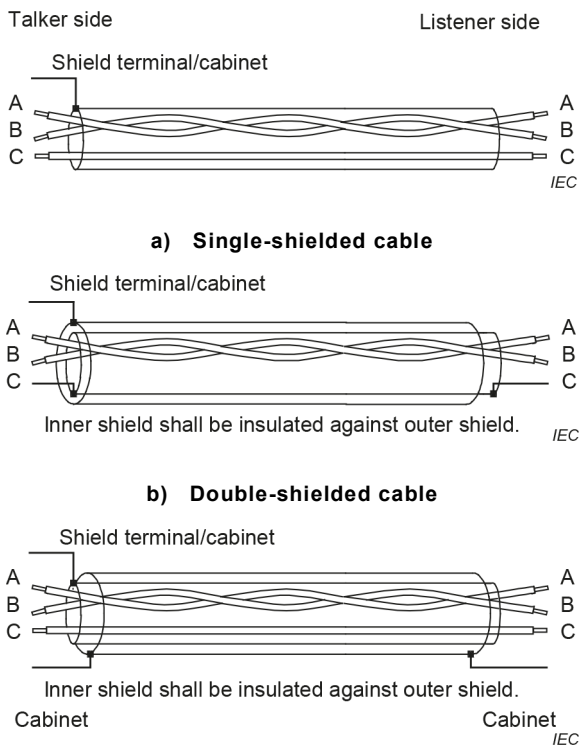

a) Single-shielded cable

b) Double-shielded cable

c) Double-shielded cable with separate wire

Figure 2 – Cables – Electrical shield requirements

5.5 Connector

No standard connector is specified. Wherever possible, readily available commercial connectors shall be used. Manufacturers shall provide means for user identification of the connections used.

5.6 Electrical signal characteristics

~~This subclause describes the electrical characteristics of transmitters and receivers.~~ 7

Documents
Document Sharing Hub
Full document details: IEC 61162-2 2024 CMV

5.6.1 Signal state definitions

The idle, marking, logical 1, OFF or stop bit state is defined by a negative voltage on line A with respect to line B, as in IEC 61162-1.

The active, spacing, logical 0, ON or start bit state is defined by a positive voltage on line A with respect to line B, as in IEC 61162-1.

5.6.2 Talker drive circuits

No provision is made for more than a single talker to be connected to the bus. The drive circuit shall meet, as a minimum, the requirements of ITU-T Recommendation X.27/V.11.

Improved and compatible driver circuits (e.g. ~~EIA~~ TIA-485) used in a compliant way are allowed.

5.6.3 Listener receive circuits

Multiple listeners may be connected to a single talker. The listener's receive circuit shall comply with ITU-T Recommendation X.27/V.11. Optional termination resistors for the line shall be provided. The input terminals A, B and C shall be electrically isolated from the remaining electronics of the listening device. Reference is made to 5.6.4 and a sample circuit shown in Figure 1.

5.6.4 Electrical isolation

Within a listener, there shall be no direct electrical connection between the signal lines A and B, the signal ground C or the shield to ship's mains ground or power line. This isolation shall be in accordance with IEC 60945.

5.6.5 Maximum voltage on the bus

The maximum applied voltage between signal lines A and B and between either line and ground C shall be in accordance with ITU-T Recommendation X.27/V.11.

For protection against miswiring and for unintended connection to earlier talker designs, all receive circuit devices shall be capable of withstanding 15 V between ~~either~~ signal lines A and B and between either line and ground for an indefinite period.

6 Data transmission

Data is transmitted in serial asynchronous form in accordance with ~~1.2~~ IEC 61162-1 **8**. The first bit is a start bit and is followed by data bits, least-significant-bit first as in Figure 3.

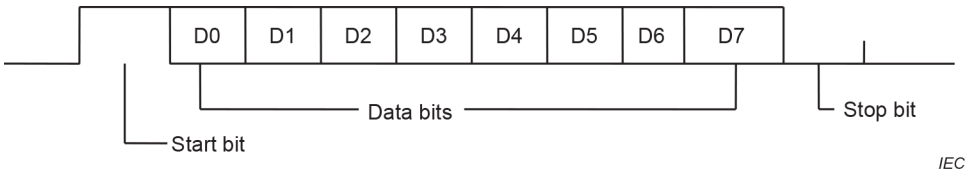

Figure 3 – Data transmission format

The following parameters are used:

– baud rate default and required is 38 400 (bits/s), higher baud rates are allowed based on equipment configuration setup; **5**

– data bits 8 (D7 = 0), parity none;

– stop bits 1.

Documents
Document Sharing Hub
Full document details: IEC 61162-2 2024 CMV

7 Data format protocol

~~5.1 Characters~~

~~All transmitted data shall be interpreted as ASCII characters. The most significant bit of the eight-bit character shall always be transmitted as zero (D7 = 0).~~

~~5.1.1 Reserved characters~~

~~The reserved character set consists of those ASCII characters shown in 6.1 (table 1) of IEC 61162-1. These characters are used for specific formatting purposes, such as sentence and field delimiting, and shall not be used in data fields.~~

~~5.1.2 Valid characters~~

~~The valid character set consists of all printable ASCII characters (HEX 20 to HEX 7E) except those defined as reserved characters. The list of the valid character set is given in 6.1 (table 2) of IEC 61162-1.~~

~~5.1.3 Undefined characters~~

~~ASCII values not specified as either reserved characters or valid characters are excluded and shall not be transmitted at any time.~~

~~5.1.4 Character symbols~~

~~When individual characters are used in this standard to define units of measurement, to indicate the type of data field, type of sentence, etc., they shall be interpreted according to the character symbol in 6.1 (table 3) of IEC 61162-1.~~

~~5.2 Fields~~

~~A field consists of a string of valid characters, or no characters (null field), located between two appropriate delimiter characters.~~

~~5.2.1 Address field~~

~~An address field is the first field in a sentence and follows the "$" delimiter; it serves to define the sentence. Characters within the address field are limited to digits and upper-case letters. The address field shall not be a null field. Only sentences with the following three types of address fields shall be transmitted.~~

~~5.2.1.1 Approved address field~~

~~Approved address fields consist of five characters defined by this standard. The first two characters are the talker identifier, listed in 6.2 (table 4) of IEC 61162-1. The next three characters form the sentence formatter used to define the format and the type of data. A list of approved sentence formatters is given in 6.2 (table 5) of IEC 61162-1.~~

~~5.2.1.2 Query address field~~

~~The query address field consists of five characters and is used for the purpose of requesting transmission of a specific sentence on a separate bus from an identified talker.~~

~~5.2.1.3 Proprietary address field~~

~~The proprietary address field consists of the proprietary character P followed by a three-character manufacturer's mnemonic code, used to identify the talker issuing a proprietary sentence, and any additional characters as required. A list of valid manufacturer's mnemonic codes may be obtained from NMEA.~~

AVA Documents
Document Sharing Hub
Full document details: IEC 61162-2 2024 CMV

~~5.2.2 Data fields~~

~~Data fields in approved sentences follow a "," delimiter and contain valid characters in accordance with the formats illustrated in 6.2 (table 6) of IEC 61162-1. Data fields in proprietary sentences contain only valid characters but are not defined by this standard.~~

~~Because of the presence of variable data fields and null fields, specific data fields shall only be located within a sentence by observing the field delimiters ",". Therefore, it is essential for the listener to locate fields by counting delimiters rather than counting the total number of characters received from the start of the sentence.~~

~~5.2.2.1 Variable length fields~~

~~Although some data fields are defined to have fixed length, many are of variable length in order to allow devices to convey information and to provide data with more or less precision, according to the capability or requirements of a particular device.~~

~~Variable length fields may be alpha-numeric or numeric fields. Variable numeric fields may contain a decimal point and may contain leading or trailing zeros.~~

~~5.2.2.2 Data field types~~

~~Data fields may be alpha, numeric, alphanumeric, variable length, fixed length, fixed/variable (with a portion fixed in length while the remainder varies). Some fields are constant, with their value dictated by a specific sentence definition. The allowable field types are summarized in 6.2 (table 6) of IEC 61162-1.~~

~~5.2.2.3 Null fields~~

~~A null field is a field of length zero, i.e. no characters are transmitted in the field. Null fields shall be used when the value is unreliable or not available.~~

~~For example, if heading information were not available, sending data of "000" is misleading because a user cannot distinguish between "000" meaning no data and a legitimate heading of "000". However, a null field, with no characters at all, clearly indicates that no data is being transmitted.~~

~~Null fields with their delimiters can have the following appearance depending on where they are located in the sentence:~~

~~",," ",*"~~

~~The ASCII NULL character (HEX 00) shall not be used as the null field.~~

~~5.2.3 Checksum field~~

~~A checksum field shall be transmitted in any sentence. The checksum field is the last field in a sentence and follows the checksum delimiter character "*". The checksum is the eight-bit exclusive OR (no start or stop bits) of all characters in the sentence, including "," delimiters, between but not including the "$" and the "*" delimiters.~~

~~The hexadecimal value of the most significant and least significant four bits of the result is converted to two ASCII characters (0-9, A-F) for transmission. The most significant character is transmitted first.~~

~~Examples of the checksum field are: $GPGLL,5057.970,N,00146.110,E,142451,A*27 and $GPVTG,089.0,T,,,15.2,N,,*7F.~~

Documents
Document Sharing Hub
Full document details: IEC 61162-2 2024 CMV

~~5.3 Sentences~~

~~This subclause describes the general structure of sentences. Details of specific sentence formats are found in 6.3 of IEC 61162-1. Some sentences may specify restrictions beyond the general limitations given in this part of this standard. Such restrictions may include defining some fields as fixed length, numeric or text only, required to be non-null, transmitted with a certain frequency, etc.~~

~~The maximum number of characters in a sentence shall be 82, consisting of a maximum of 79 characters between the starting delimiter "$" and the terminating delimiter <CR> <LF>.~~

~~The minimum number of fields in a sentence is one (1). The first field shall be an address field containing the identity of the talker and the sentence formatter which specifies the number of data fields in the sentence, the type of data they contain and the order in which the data fields are transmitted. The remaining portion of the sentence may contain zero or multiple data fields.~~

~~The maximum number of fields allowed in a single sentence is limited only by the maximum sentence length of 82 characters. Null fields may be present in the sentence and shall always be used if data for that field is unavailable.~~

~~All sentences begin with the sentence starting delimiter character "$" and end with the sentence terminating delimiter <CR> <LF>.~~

~~5.3.1 Description of approved sentences~~

~~Approved sentences are those designed for general use and detailed in this standard. Approved sentences are listed in 6.3 of IEC 61162-1 and shall be used wherever possible. Other sentences, not recommended for new designs, may be found in practice. Such sentences are listed in NMEA 0183. Information on such sentences may be obtained from NMEA (see 5.3.3).~~

~~An approved sentence contains, in the order shown, the following elements:~~

~~*ASCII*~~	~~*HEX*~~	~~*Description*~~
~~"$"~~	~~24~~	~~– start of sentence~~
~~<address field>~~		~~– talker identifier and sentence formatter~~
~~"," <data field>~~		~~– zero or more data fields~~
~~"," <data field>~~		
~~"*" <checksum field>~~		~~– checksum field~~
~~<CR> <LF>~~	~~0D 0A~~	~~– end of sentence~~

~~5.3.1.1 Approval sentence structure~~

~~The following provides a summary explanation of the approved sentence structure:~~

~~$aaccc, c---c*hh<CR> <LF>~~

~~*ASCII*~~	~~*HEX*~~	~~*Description*~~
~~"$"~~	~~24~~	~~*Start of sentence:* starting delimiter~~
~~aaccc~~		~~*Address field:* alphanumeric characters identifying type of talker, and sentence formatter. The first two characters identify the talker. The last three are the sentence formatter mnemonic code identifying the data type and the string format of the successive fields. Mnemonics will be used as far as possible to facilitate read-outs by users.~~

AVA Documents
Document Sharing Hub

~~","~~	~~2C~~	~~*Field delimiter:* starts each field except address and checksum fields. If it is followed by a null field, it is all that remains to indicate no data in a field.~~
~~c---c~~		~~*Data sentence block:* follows address field and is a series of data fields containing all of the data to be transmitted. Data field sequence is fixed and identified by third and subsequent characters of the address field (the sentence formatter). Data fields may be of variable length and are preceded by delimiters ",".~~
~~"*"~~	~~2A~~	~~*Checksum delimiter:* follows last data field of the sentence. It indicates that the following two alphanumeric characters show the HEX value of the checksum.~~
~~hh~~		~~*Checksum field:* the absolute value calculated by exclusive-OR'ing the eight data bits (no start bits or stop bits) of each character in the sentence, between, but excluding "$" and "*". The hexadecimal value of the most significant and least significant four bits of the result are converted to two ASCII characters (0-9, A-F) for transmission. The most significant character is transmitted first.~~
~~<CR> <LF>~~	~~0D 0A~~	~~*End of sentence:* sentence terminating delimiter.~~

~~5.3.2 Query sentences~~

~~Query sentences are intended to request approved sentences to be transmitted in a form of two-way communication. The use of query sentences implies that the listener shall have the capability of being a talker with its own bus.~~

~~The approved query sentence contains, in the order shown, the following elements:~~

~~*ASCII*~~	~~*HEX*~~	~~*Description*~~
~~"$"~~	~~24~~	~~start of sentence~~
~~<aa>~~		~~talker identifier of requester~~
~~<aa>~~		~~talker identifier for device from which data is being requested~~
~~"Q"~~		~~query character identifies query address~~
~~","~~		~~data field delimiter~~
~~<ccc>~~		~~approved sentence formatter of data being requested~~
~~"*" <checksum field>~~		~~checksum field~~
~~<CR> <LF>~~	~~0D 0A~~	~~end of sentence~~

~~5.3.2.1 Reply to query sentence~~

~~The reply to a query sentence is the approved sentence that was requested. The use of query sentences requires cooperation between the devices that are interconnected. A reply to a query sentence is not mandatory and there is no specified time delay between the receipt of a query and the reply.~~

~~5.3.3 Proprietary sentences~~

~~These are sentences not included within this standard; these provide a means for manufacturers to use the sentence structure definitions of this standard to transfer data which does not fall within the scope of approved sentences. This will generally be for one of the following reasons.~~

~~a) Data is intended for another device from the same manufacturer, is device specific, and not in a form or of a type of interest to the general user.~~

AVA Documents
Document Sharing Hub

~~b) Data is being used for test purposes prior to the adoption of approved sentences.~~

~~c) Data is not of a type and general usefulness which merits the creation of an approved sentence.~~

~~The manufacturer's reference list of mnemonic codes is a component of the equivalent specification NMEA 0183.*~~

~~A proprietary sentence contains, in the order shown, the following elements:~~

ASCII	*HEX*	*Description*
"$"	24	start of sentence
"P"	50	proprietary sentence ID
<aaa>		manufacturer's mnemonic code
<address field>		talker identifier and sentence formatter
<valid characters, manufacturer's data>		
"*" <checksum field>		checksum field
<CR> <LF>	0D 0A	end of sentence

~~Beyond limiting overall sentence length and requiring the use of only valid characters, details of proprietary data fields are not included in this standard. However, it is required that such sentences be published in the manufacturer's manuals for reference.~~

~~5.3.4 Valid sentences~~

~~Approved sentences, query sentences and proprietary sentences are the only valid sentences. Sentences of any other form are non-valid and shall not be transmitted on the bus.~~

~~5.3.5 Sentence transmission timing~~

~~Frequency of sentence transmission shall be consistent with the basic measurement or calculation cycle but generally not more frequently than once per 20 ms.~~

~~It is desirable that sentences be transmitted with a minimum inter-character spacing, preferable as near continuous burst, but under no circumstances shall the time to complete the transmission of a sentence be greater than 100 ms.~~

~~5.3.6 Additions to approved sentences~~

~~In order to allow for improvements or additions, future revisions of this standard may modify existing sentences by adding new data fields after the last data field but before the checksum delimiter character "*" and checksum field. Listeners shall determine the end of the sentence by recognition of "<CR> <LF>" and "*" rather than by counting field delimiters. The checksum value shall be computed on all received characters between, but not including, "$" and "*" whether or not the listener recognizes all fields.~~

~~5.4 Error detection and handling~~

~~Listening devices shall detect errors in data transmission including:~~

- ~~checksum error;~~
- ~~invalid characters;~~

~~* The NMEA secretariat maintains the master reference list which comprises codes registered and formally adopted by NMEA.~~

AVA Documents
Document Sharing Hub
Full document details: IEC 61162-2 2024 CMV

~~– incorrect length of talker identifier and/or formatter;~~

~~– time out.~~

~~Listening devices shall use only correct sentences.~~ 9

Refer to IEC 61162-1.

8 Data content

~~This clause is identical with clause 6 of IEC 61162-1.~~

Refer to IEC 61162-1. 10

9 Applications

~~This clause is identical with clause 7 of IEC 61162-1. For the purpose of compatibility with that standard, in case of modifications, no dedicated specification is made in this standard.~~

Refer to IEC 61162-1. 10

10 Methods of testing and required test results

10.1 Test preparation

10.1.1 General

The manufacturer shall, unless otherwise agreed, set up the EUT (equipment under test) as well as all necessary test equipment and ensure that it is operational before testing commences. The manufacturer shall provide sufficient technical documentation of the EUT.

10.1.2 Testing under ambient conditions

All tests shall be carried out under the ambient conditions defined in the specific standard for the EUT. If no ambient conditions are defined, the temperature range between +10 °C and +35 °C shall be applied.

10.2 Test sequence

Where appropriate, tests against different subclauses of this document may be carried out simultaneously.

10.3 Standard test signals

For testing transmitting interfaces, those standard IEC 61162 sentences and proprietary messages shall be used which the EUT transmits during normal operation.

For testing receiving interfaces of the EUT, those IEC 61162 sentences and proprietary messages shall be applied which are received/used by the EUT during its normal operation.

Documents
Document Sharing Hub

Full document details: IEC 61162-2 2024 CMV