IEC 61169-10

Edition 1.0 2024-02

INTERNATIONAL STANDARD

NORME INTERNATIONALE

Radio- frequency connectors – Part 10: Sectional specification for RF coaxial connectors with inner diameter of outer conductor 3 mm (0,12 in) with snap-on coupling – Characteristic impedance 50 Ω (Type SMB)

Connecteurs pour fréquences radioélectriques – Partie 10: Spécification intermédiaire relative aux connecteurs coaxiaux pour fréquences radioélectriques avec diamètre intérieur du conducteur extérieur de 3 mm (0,12 in) à couplage par encliquetage – Impédance caractéristique 50 Ω (type SMB)

IEC 61169-10:2024-02(en-fr)

Documents
Document Sharing Hub
Full document details: IEC 61169-10-2024

THIS PUBLICATION IS COPYRIGHT PROTECTED
Copyright © 2024 IEC, Geneva, Switzerland

All rights reserved. Unless otherwise specified, no part of this publication may be reproduced or utilized in any form or by any means, electronic or mechanical, including photocopying and microfilm, without permission in writing from either IEC or IEC's member National Committee in the country of the requester. If you have any questions about IEC copyright or have an enquiry about obtaining additional rights to this publication, please contact the address below or your local IEC member National Committee for further information.

Droits de reproduction réservés. Sauf indication contraire, aucune partie de cette publication ne peut être reproduite ni utilisée sous quelque forme que ce soit et par aucun procédé, électronique ou mécanique, y compris la photocopie et les microfilms, sans l'accord écrit de l'IEC ou du Comité national de l'IEC du pays du demandeur. Si vous avez des questions sur le copyright de l'IEC ou si vous désirez obtenir des droits supplémentaires sur cette publication, utilisez les coordonnées ci-après ou contactez le Comité national de l'IEC de votre pays de résidence.

IEC Secretariat
3, rue de Varembé
CH-1211 Geneva 20
Switzerland

Tel.: +41 22 919 02 11
info@iec.ch
www.iec.ch

About the IEC
The International Electrotechnical Commission (IEC) is the leading global organization that prepares and publishes International Standards for all electrical, electronic and related technologies.

About IEC publications
The technical content of IEC publications is kept under constant review by the IEC. Please make sure that you have the latest edition, a corrigendum or an amendment might have been published.

IEC publications search - webstore.iec.ch/advsearchform
The advanced search enables to find IEC publications by a variety of criteria (reference number, text, technical committee, …). It also gives information on projects, replaced and withdrawn publications.

IEC Just Published - webstore.iec.ch/justpublished
Stay up to date on all new IEC publications. Just Published details all new publications released. Available online and once a month by email.

IEC Customer Service Centre - webstore.iec.ch/csc
If you wish to give us your feedback on this publication or need further assistance, please contact the Customer Service Centre: sales@iec.ch.

IEC Products & Services Portal - products.iec.ch
Discover our powerful search engine and read freely all the publications previews, graphical symbols and the glossary. With a subscription you will always have access to up to date content tailored to your needs.

Electropedia - www.electropedia.org
The world's leading online dictionary on electrotechnology, containing more than 22 500 terminological entries in English and French, with equivalent terms in 25 additional languages. Also known as the International Electrotechnical Vocabulary (IEV) online.

A propos de l'IEC
La Commission Electrotechnique Internationale (IEC) est la première organisation mondiale qui élabore et publie des Normes internationales pour tout ce qui a trait à l'électricité, à l'électronique et aux technologies apparentées.

A propos des publications IEC
Le contenu technique des publications IEC est constamment revu. Veuillez vous assurer que vous possédez l'édition la plus récente, un corrigendum ou amendement peut avoir été publié.

Recherche de publications IEC - webstore.iec.ch/advsearchform
La recherche avancée permet de trouver des publications IEC en utilisant différents critères (numéro de référence, texte, comité d'études, …). Elle donne aussi des informations sur les projets et les publications remplacées ou retirées.

IEC Just Published - webstore.iec.ch/justpublished
Restez informé sur les nouvelles publications IEC. Just Published détaille les nouvelles publications parues. Disponible en ligne et une fois par mois par email.

Service Clients - webstore.iec.ch/csc
Si vous désirez nous donner des commentaires sur cette publication ou si vous avez des questions contactez-nous: sales@iec.ch.

IEC Products & Services Portal - products.iec.ch
Découvrez notre puissant moteur de recherche et consultez gratuitement tous les aperçus des publications, symboles graphiques et le glossaire. Avec un abonnement, vous aurez toujours accès à un contenu à jour adapté à vos besoins.

Electropedia - www.electropedia.org
Le premier dictionnaire d'électrotechnologie en ligne au monde, avec plus de 22 500 articles terminologiques en anglais et en français, ainsi que les termes équivalents dans 25 langues additionnelles. Egalement appelé Vocabulaire Electrotechnique International (IEV) en ligne.

Documents
Document Sharing Hub

Full document details: IEC 61169-10-2024

IEC 61169-10

Edition 1.0 2024-02

INTERNATIONAL STANDARD

NORME INTERNATIONALE

Radio- frequency connectors – Part 10: Sectional specification for RF coaxial connectors with inner diameter of outer conductor 3 mm (0,12 in) with snap-on coupling – Characteristic impedance 50 Ω (Type SMB)

Connecteurs pour fréquences radioélectriques – Partie 10: Spécification intermédiaire relative aux connecteurs coaxiaux pour fréquences radioélectriques avec diamètre intérieur du conducteur extérieur de 3 mm (0,12 in) à couplage par encliquetage – Impédance caractéristique 50 Ω (type SMB)

INTERNATIONAL
ELECTROTECHNICAL
COMMISSION

COMMISSION
ELECTROTECHNIQUE
INTERNATIONALE

ICS 33.120.30

ISBN 978-2-8322-8277-9

Warning! Make sure that you obtained this publication from an authorized distributor.
Attention! Veuillez vous assurer que vous avez obtenu cette publication via un distributeur agréé.

® Registered trademark of the International Electrotechnical Commission
Marque déposée de la Commission Electrotechnique Internationale

Documents
Document Sharing Hub

Full document details: IEC 61169-10-2024

CONTENTS

FOREWORD 3
1 Scope 5
2 Normative references 5
3 Terms and definitions 5
4 Mating face and gauge information 6
4.1 Dimensions − General connectors – Grade 2 6
4.1.1 Connector with pin centre contact 6
4.1.2 Connector with socket centre contact 7
4.2 Gauges 9
4.2.1 Gauge pin for socket centre contact 9
4.2.2 Gauge for outer contact of connector with pin centre contact 9
4.3 Dimensions – Standard test connectors – Grade 0 11
4.3.1 Connectors with pin centre contact 11
4.3.2 Connector with socket centre contact 12
5 Quality assessment procedures 14
5.1 General 14
5.2 Ratings and characteristics 14
5.3 Test schedule and inspection requirements 17
5.3.1 Acceptance tests 17
5.3.2 Periodic tests 17
5.3.3 Procedures for the quality conformance 20
6 Instructions for preparation of detail specifications 20
6.1 General 20
6.2 Identification of the component 20
6.3 Performance 20
6.4 Marking, ordering information and related matters 21
6.5 Selection of tests, test conditions and severities 21
6.6 Blank detail specification pro-forma for SMB connectors 21

Figure 1 – Connector with pin centre contact 6
Figure 2 – Connector with socket centre contact 8
Figure 3 – Gauge pin for socket centre contact 9
Figure 4 – Gauge for outer contact of connector with pin centre contact 10
Figure 5 – Connector with pin centre contact 11
Figure 6 – Connector with socket in centre contact 13

Table 1 – Dimensions of connector with pin centre contact 7
Table 2 – Dimensions of connector with socket centre contact 8
Table 3 – Dimensions of gauge pin for socket centre contact 9
Table 4 – Dimensions of gauge for outer contact of connector with pin centre contact 10
Table 5 – Dimensions of connector with pin centre contact 12
Table 6 – Dimensions of connector with socket centre contact 14
Table 7 – Preferred climatic categories 15
Table 8 – Ratings and characteristics 15
Table 9 – Acceptance tests 17
Table 10 – Periodic tests 18

AVA Documents
Document Sharing Hub

Full document details: IEC 61169-10-2024

INTERNATIONAL ELECTROTECHNICAL COMMISSION

RADIO-FREQUENCY CONNECTORS –

Part 10: Sectional specification for RF coaxial connectors with inner diameter of outer conductor 3 mm (0,12 in) with snap-on coupling – Characteristic impedance 50 Ω (Type SMB)

FOREWORD

1) The International Electrotechnical Commission (IEC) is a worldwide organization for standardization comprising all national electrotechnical committees (IEC National Committees). The object of IEC is to promote international co-operation on all questions concerning standardization in the electrical and electronic fields. To this end and in addition to other activities, IEC publishes International Standards, Technical Specifications, Technical Reports, Publicly Available Specifications (PAS) and Guides (hereafter referred to as "IEC Publication(s)"). Their preparation is entrusted to technical committees; any IEC National Committee interested in the subject dealt with may participate in this preparatory work. International, governmental and non-governmental organizations liaising with the IEC also participate in this preparation. IEC collaborates closely with the International Organization for Standardization (ISO) in accordance with conditions determined by agreement between the two organizations.
2) The formal decisions or agreements of IEC on technical matters express, as nearly as possible, an international consensus of opinion on the relevant subjects since each technical committee has representation from all interested IEC National Committees.
3) IEC Publications have the form of recommendations for international use and are accepted by IEC National Committees in that sense. While all reasonable efforts are made to ensure that the technical content of IEC Publications is accurate, IEC cannot be held responsible for the way in which they are used or for any misinterpretation by any end user.
4) In order to promote international uniformity, IEC National Committees undertake to apply IEC Publications transparently to the maximum extent possible in their national and regional publications. Any divergence between any IEC Publication and the corresponding national or regional publication shall be clearly indicated in the latter.
5) IEC itself does not provide any attestation of conformity. Independent certification bodies provide conformity assessment services and, in some areas, access to IEC marks of conformity. IEC is not responsible for any services carried out by independent certification bodies.
6) All users should ensure that they have the latest edition of this publication.
7) No liability shall attach to IEC or its directors, employees, servants or agents including individual experts and members of its technical committees and IEC National Committees for any personal injury, property damage or other damage of any nature whatsoever, whether direct or indirect, or for costs (including legal fees) and expenses arising out of the publication, use of, or reliance upon, this IEC Publication or any other IEC Publications.
8) Attention is drawn to the Normative references cited in this publication. Use of the referenced publications is indispensable for the correct application of this publication.
9) IEC draws attention to the possibility that the implementation of this document may involve the use of (a) patent(s). IEC takes no position concerning the evidence, validity or applicability of any claimed patent rights in respect thereof. As of the date of publication of this document, IEC had not received notice of (a) patent(s), which may be required to implement this document. However, implementers are cautioned that this may not represent the latest information, which may be obtained from the patent database available at https://patents.iec.ch. IEC shall not be held responsible for identifying any or all such patent rights.

IEC 61169-10 has been prepared by subcommittee 46F: RF and microwave passive components, of IEC technical committee 46: Cables, wires, waveguides, RF connectors, RF and microwave passive components and accessories. It is an International Standard.

The text of this International Standard is based on the following documents:

Draft	Report on voting
46F/658/FDIS	46F/665/RVD

Full information on the voting for its approval can be found in the report on voting indicated in the above table.

Documents
Document Sharing Hub

Full document details: IEC 61169-10-2024

The language used for the development of this International Standard is English.

This document was drafted in accordance with ISO/IEC Directives, Part 2, and developed in accordance with ISO/IEC Directives, Part 1 and ISO/IEC Directives, IEC Supplement, available at www.iec.ch/members_experts/refdocs. The main document types developed by IEC are described in greater detail at www.iec.ch/publications.

A list of all parts of the IEC 61169 series, under the general title: *Radio-frequency connectors*, can be found on the IEC website.

The committee has decided that the contents of this document will remain unchanged until the stability date indicated on the IEC website under webstore.iec.ch in the data related to the specific document. At this date, the document will be

- reconfirmed,
- withdrawn, or
- revised.

Documents
Document Sharing Hub

Full document details: IEC 61169-10-2024

RADIO-FREQUENCY CONNECTORS –

Part 10: Sectional specification for RF coaxial connectors with inner diameter of outer conductor 3 mm (0,12 in) with snap-on coupling – Characteristic impedance 50 Ω (Type SMB)

1 Scope

This part of IEC 61169, which is a sectional specification (SS), provides information and rules for the preparation of detail specifications (DS) for series SMB RF coaxial connectors with snap-on coupling with a characteristic impedance of 50 Ω.

This document prescribes mating face dimensions for high performance connectors – grade 2, dimensional details of standard test connectors − grade 0, gauging information and tests selected from IEC 61169-1, applicable to all detail specifications relating to series SMB RF connectors.

This document indicates recommended performance characteristics to be considered when writing a detail specification and it covers test schedules and inspection requirements for assessment levels M and H.

The series SMB connectors are used to connect with all kinds of RF cables and microstrips in microwave transmission systems. The operating frequency is up to 4 GHz.

2 Normative references

The following documents are referred to in the text in such a way that some or all of their content constitutes requirements of this document. For dated references, only the edition cited applies. For undated references, the latest edition of the referenced document (including any amendments) applies.

IEC 61169-1:2013, *Radio frequency connectors – Part 1: Generic specification – General requirements and measuring methods*

IEC 62153-4-7, *Metallic cables and other passive components test methods − Part 4-7: Electromagnetic compatibility (EMC) − Test method for measuring of transfer impedance Z_T and screening attenuation a_S or coupling attenuation a_C of connectors and assemblies − Triaxial tube in tube method*

3 Terms and definitions

No terms and definitions are listed in this document.

ISO and IEC maintain terminology databases for use in standardization at the following addresses:

- IEC Electropedia: available at https://www.electropedia.org/
- ISO Online browsing platform: available at https://www.iso.org/obp

Documents
Document Sharing Hub

Full document details: IEC 61169-10-2024

4 Mating face and gauge information

4.1 Dimensions − General connectors – Grade 2

4.1.1 Connector with pin centre contact

Metric dimensions are original dimensions. All undimensioned pictorial information is for reference only.

The mating face of connector with pin centre contact is shown in Figure 1 and its dimensions are shown in Table 1.

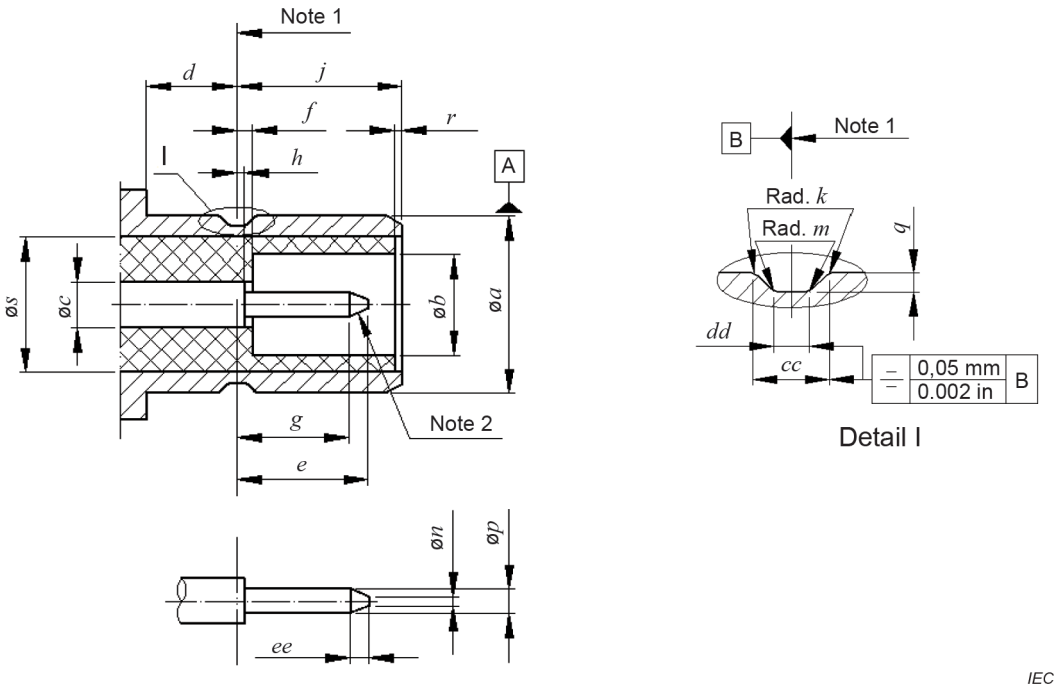

NOTE 1 Mechanical and electrical reference plane.

NOTE 2 The shape of the top is optional.

NOTE 3 For dimensions, see Table 1.

Figure 1 – Connector with pin centre contact

Documents
Document Sharing Hub
Full document details: IEC 61169-10-2024

Table 1 – Dimensions of connector with pin centre contact

Ref.	mm		in		Notes
	Min.	Max.	Min.	Max.	
a	3,66	3,71	0,144	0,146	
b	2,08	-	0,082	-	
c [a]	-	-	-	-	
d	1.65	-	0,065	-	
e	-	2,97	-	0,117	
f	-	0,18	-	0,007	
g	1,32	-	0,052	-	
h	-	0,18	-	0,007	
j	3,33	3,58	0,131	0,141	
k	0,05	0,15	0,002	0,006	
m	-	0,13	-	0,005	
n	-	0,25	-	0,010	
p	0,48	0,53	0,019	0,021	
q	0,15	0,25	0,006	0,010	
r	0,0	-	0,00	-	
s	3,05 (nom)		0,120 (nom)		
cc	0,69	0,94	0,027	0,037	
dd	0,28	0,38	0,011	0,015	
ee	0,25	-	0,01	-	

[a] The selected dimension shall meet the requirement of 50 Ω characteristics.

4.1.2 Connector with socket centre contact

The mating face of connector with socket centre contact is shown in Figure 2 and its dimensions are shown in Table 2.

Documents
Document Sharing Hub
Full document details: IEC 61169-10-2024

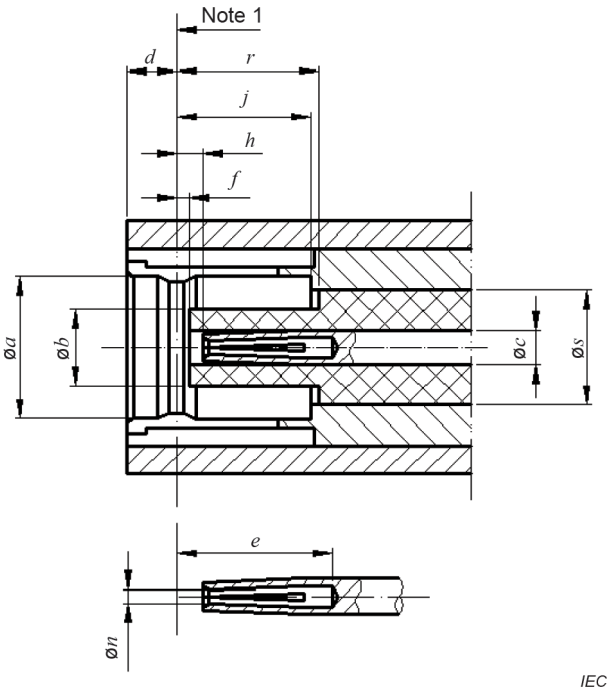

NOTE 1 Mechanical and electrical reference plane.

NOTE 2 For dimensions, see Table 2.

Figure 2 – Connector with socket centre contact

Table 2 – Dimensions of connector with socket centre contact

Ref.	mm		in		Notes
	Min.	Max.	Min.	Max.	
a [a]	-	-	-	-	
b	-	2,06	-	0,081	
c [b]	-	-	-	-	
d	-	1,63	-	0,064	
e	2,97	-	0,117	-	
f	0,18	-	0,007	-	
h	0,18	0,94	0,007	0,037	
j [a]	3,58	-	0,141	-	
n [c]	-	-	-	-	
r	3,58	-	0,141	-	
s [b]	3,05 (nom)		0,120 (nom)		

[a] Refer to the detail drawing of plug interface-groove in 4.1.1; the shape and size of external contact should meet the requirements of electrical and mechanical properties.

[b] The selected dimension shall meet the requirement of 50 Ω characteristics.

[c] Bore diameter closed to meet electrical and mechanical requirements.

Documents
Document Sharing Hub
Full document details: IEC 61169-10-2024

4.2 Gauges

4.2.1 Gauge pin for socket centre contact

The gauge pin for socket centre contact is shown in Figure 3 and its dimensions are shown in Table 3.

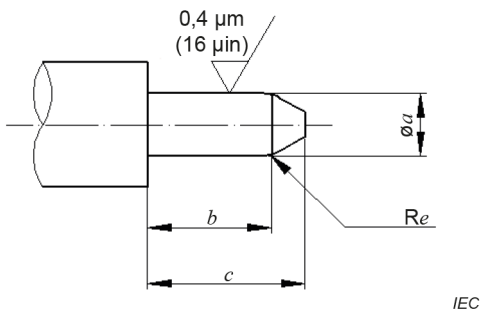

NOTE For dimensions, see Table 3.

Figure 3 – Gauge pin for socket centre contact

Table 3 – Dimensions of gauge pin for socket centre contact

Gauge A (For sizing purpose)					Gauge B (For measurement of gauge retention force for outer conductor) Mass of gauge: 28 g ± 1 g			
Ref.	mm		in		mm		in	
	Min.	Max.	Min.	Max.	Min.	Max.	Min.	Max.
a	0,533	0,538	0,021 0	0,021 2	0,477	0,482	0,018 8	0,190
b	1,27	-	0,05	-	1,27	-	0,05	-
c	-	2,5	-	0,098	-	2,5	-	0,098
e	-	0,4	-	0,015 7	-	0,4	-	0,015 7
Material: steel, polished.								

The test procedure is as follows:

a) Sizing test

The gauge A shall be inserted into the socket-centre contact three times. This is a sizing operation.

b) Retention test

After sizing test, the gauge B shall be inserted into socket-centre contact. The contact shall retain the mass of the gauge B in a vertical downward position.

This test may also be carried out on the connector with the insulator unremoved.

4.2.2 Gauge for outer contact of connector with pin centre contact

The gauge for outer contact of connector with pin centre contact is shown in Figure 4 and its dimensions are shown in Table 4.

Documents
Document Sharing Hub
Full document details: IEC 61169-10-2024

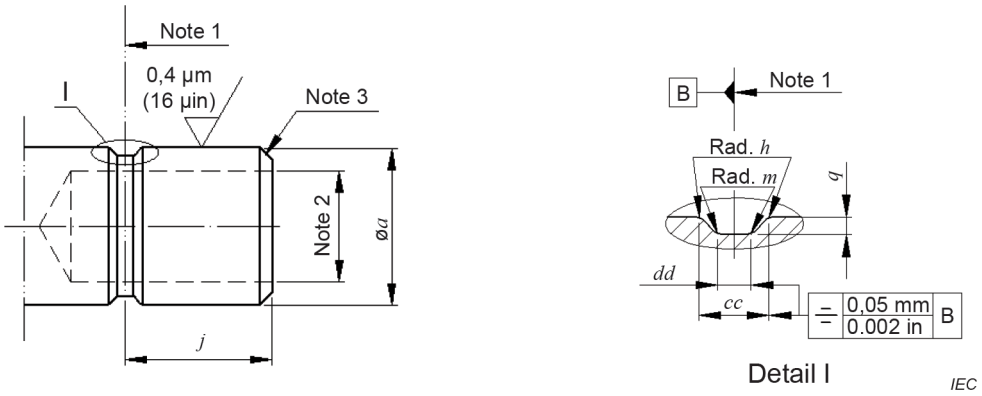

NOTE 1 Mechanical and electrical reference plane.

NOTE 2 Enable the inner conductor and insulator of the jack connector to be inserted into the inner hole.

NOTE 3 Rounding or chamfering is allowed, up to 0,38 mm (0,015 in).

NOTE 4 For dimensions, see Table 4.

Figure 4 – Gauge for outer contact of connector with pin centre contact

Table 4 – Dimensions of gauge for outer contact of connector with pin centre contact

Ref.	Gauge C (For sizing purpose)				Gauge D (For measurement of gauge retention force for outer conductor) Mass of gauge: 800 g ± 10 g			
	mm		in		mm		in	
	Min.	Max.	Min.	Max.	Min.	Max.	Min.	Max.
a	3,68	3,71	0,145 0	0,146 0	3,68	3,71	0,145 0	0,146 0
j	3,33	3,58	0,131	0,141	3,33	3,58	0,131	0,141
h	0,05	0,15	0,002	0,006	0,05	0,15	0,002	0,006
m	-	0,13	-	0,005	-	0,13	-	0,005
q	0,23	0,25	0,009	0,010	0,15	0,18	0,006	0,007
cc	0,91	0,94	0,036	0,037	0,69	0,71	0,027	0,028
dd	0,36	0,38	0,014	0,015	0,28	0,30	0,011	0,012
Material: steel, polished.								

The test procedure is as follows:

a) Sizing test

The outer contact shall be inserted into the gauge C once. This is a sizing operation.

b) Retention test

After sizing test, the outer contact shall be inserted into the gauge D. The outer contact shall retain the gauge in a vertical downward direction.

This test may also be carried out on the connector with the contact element unremoved.

Documents
Document Sharing Hub
Full document details: IEC 61169-10-2024

4.3 Dimensions – Standard test connectors – Grade 0

4.3.1 Connectors with pin centre contact

The interface of connector with pin centre contact is shown in Figure 5, dimensions are shown in Table 5.

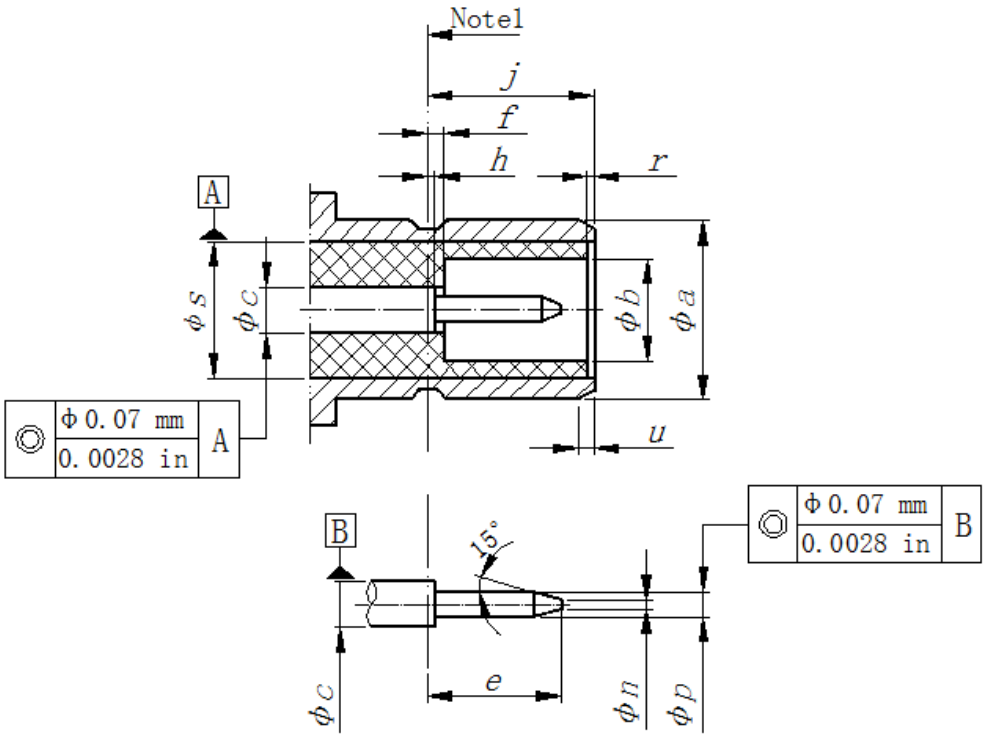

NOTE 1 Mechanical and electrical reference plane.

NOTE 2 For dimensions, see Table 5.

Figure 5 – Connector with pin centre contact

Documents
Document Sharing Hub
Full document details: IEC 61169-10-2024

Table 5 – Dimensions of connector with pin centre contact

Ref.	mm		in		Notes
	Min.	Max.	Min.	Max.	
a	3,66	3,71	0,144	0,146	
b [a]	2,08	2,15	0,082	0,085	
c [b]	-	-	-	-	
e	2,39	2,72	0,094	0,107	
f	−0,24 [c]	0,11	−0,009 5 [c]	0,004 5	
h	−0,11 [c]	0,09	−0,004 5 [c]	0,003 5	
j	3,48	3,53	0,137	0,139	
n	-	0,25	-	0,010	
p	0,48	0,53	0,019	0,021	
r	0,04	0,24	0,001 5	0,009 5	
s [b]	3,05	3,07	0,120	0,121	
u	0,102	0,178	0,004	0,007	chamf.
Dimensions not noted in this table are shown in 4.1.1.					

[a] The size of PTFE medium with dielectric constant of 2,02 and the PTFE medium shall be used.

[b] The selected diameter shall meet the requirements of 50 Ω ±0,5 Ω characteristic impedance.

[c] The maximum absolute value relative to the left of the datum (towards the cable).

4.3.2 Connector with socket centre contact

The mating face of standard test connector with socket centre contact is shown in Figure 6 and its dimensions are shown in Table 6.

Documents
Document Sharing Hub
Full document details: IEC 61169-10-2024

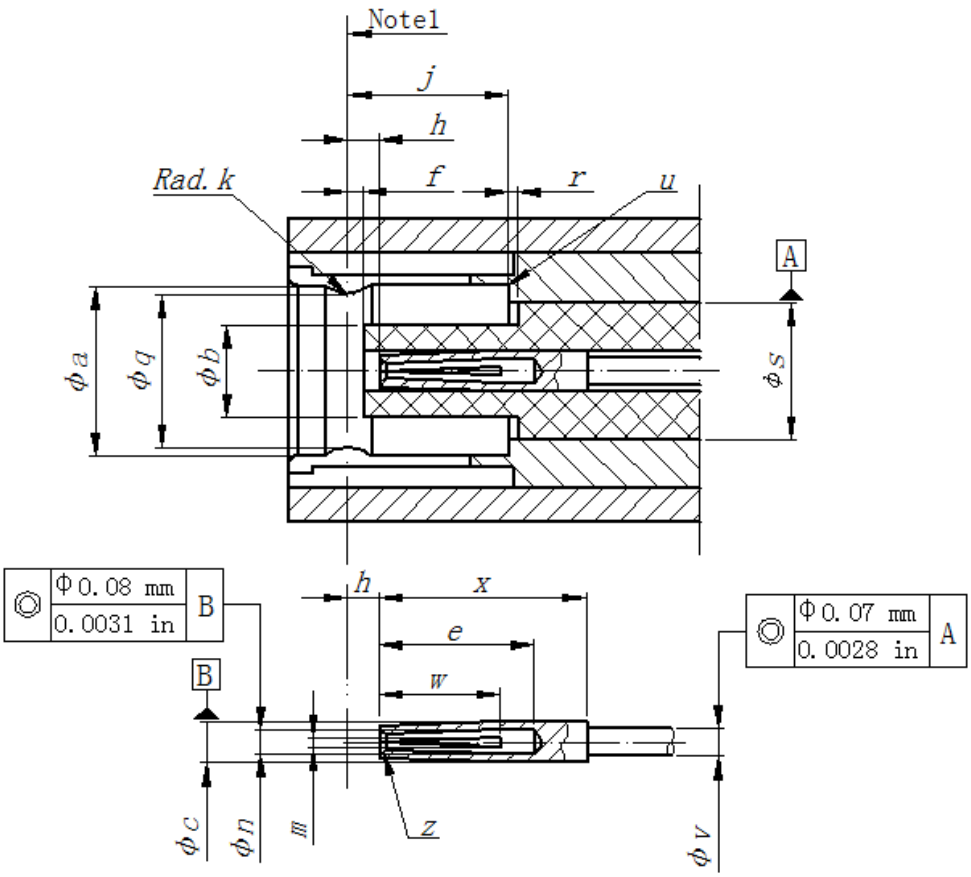

NOTE 1 Mechanical and electrical reference plane.

NOTE 2 For dimensions, see Table 6.

Figure 6 – Connector with socket in centre contact

Documents
Document Sharing Hub
Full document details: IEC 61169-10-2024

Table 6 – Dimensions of connector with socket centre contact

Ref.	mm		in		Notes
	Min.	Max.	Min.	Max.	
a	3,73	3,78	0,147	0,149	
b [a]	2,01	2,06	0,079	0,081	
c [b]	1,01	1,03	0,039 6	0,040 4	
e	2,79	-	0,110	-	
f	0,27	0,52	0,010 5	0,020 5	
h	0,29	0,57	0,011 5	0,022 5	
j	3,58	3,78	0,141	0,149	
k	0,64	0,76	0,025	0,030	
q	3,40	3,45	0,134	0,136	
r	−0,01 [c]	0,29	−0,000 5 [c]	0,011 5	
s [d]	3,05	3,07	0,120	0,121	
u	-	0,08	-	0,003	
v [d]	-	-	-	-	
w	1,52	1,78	0,060	0,070	
x	3,37	3,49	0,132 5	0,137 5	
m	0,13	0,23	0,005	0,009	
z	0,05	0,15	0,002	0,005	chamf.×45°
Dimensions not noted in this table are shown in 4.1.2.					

[a] The size of PTFE medium with dielectric constant of 2,02 and the PTFE medium shall be used.

[b] Insert dimensions using a standard needle gauge with diameter 0,51 mm (0,020 in).

[c] The maximum absolute value relative to the right of the datum (towards the cable).

[d] The selected diameter shall meet the requirements of 50 Ω ± 0,5 Ω characteristic impedance.

5 Quality assessment procedures

5.1 General

Subclauses 5.2 to 5.3 provide recommended ratings, performance and test conditions to be considered when writing a detail specification (DS). They also provide an appropriate schedule of tests with minimum levels of conformance inspection sampling, together with the pro forma blank detail specification (BDS) and instructions for the preparation of a detail specification.

5.2 Ratings and characteristics

Preferred climatic categories are given in Table 7.

The values indicated below are recommended for SMB series RF connectors and are given for the writer of the detail specification. They are applicable for the condition when the connectors are fully mated. Rating and characteristics are given in Table 8.

Certain tests are listed without any recommended values being given. These tests will usually not be required. When these tests are required, appropriate values shall be entered in the detail specification at the discretion of the specification writer.

Documents
Document Sharing Hub
Full document details: IEC 61169-10-2024

Table 7 – Preferred climatic categories

Climate series	Temperature range	Steady damp heat
55/155/21	−55 °C ~ +155 °C	21 days

Table 8 – Ratings and characteristics

Ratings and characteristics	IEC 61169-1:2013 Subclause	Value	Remarks including any deviations from standard test methods
Electrical			
Nominal impedance		50 Ω	
Frequency range[a] – Grade 2 connectors		 DC to 4 GHz	
Return loss[a] – Grade 2 connectors – straight styles – right-angle styles – component mounting styles – solder bucket and PCB mounting styles	9.2.1	≤ −20 dB ≤ −14,42 dB ≤ −13,98 dB ≤ −12,04 dB See DS See DS	 DC to 1 GHz DC to 4 GHz DC to 1 GHz DC to 4 GHz
Centre contact resistance [b] – initial – after conditioning	9.2.3	 ≤ 5 mΩ ≤ 15 mΩ	
Outer conductor resistance [b] – initial – after conditioning	9.2.3	 ≤ 2,5 mΩ ≤ 10 mΩ	
Insulation resistance – initial – after conditioning	9.2.5	 ≥ 1 GΩ ≥ 500 mΩ	
Voltage proof – Voltage proof at sea –level [c,d] – Voltage proof at 4,4 kPa	9.2.6	 1 000 V 250 V	 4,4 kPa approximately equivalent to 20 km
Screening effectiveness [e] (straight cabled connectors only)	9.2.7	≥ 70 dB, at 1 GHz	
Discharge test (corona effect) – Discharge test at sea	9.2.8	See DS	(86 to 106) kPa
– Discharge test at 4,4 kPa		See DS	4,4 kPa approximately equivalent to 20 km
Mechanical			
Centre contact captivation – axial force – torque	9.3.5	 10 N 0,02 N·m	 Only applicable to the centre contact with captivation structure. After the test, the centre contact shall comply with the requirements of the interface dimensions.

Documents
Document Sharing Hub
Full document details: IEC 61169-10-2024