IEC 61169-18

Edition 1.0 2011-01

INTERNATIONAL STANDARD

NORME INTERNATIONALE

colour inside

Radio-frequency connectors – Part 18: Sectional specification – Radio frequency coaxial connectors of type SSMA

Connecteurs pour fréquences radioélectriques – Partie 18: Spécification intermédiaire – Connecteurs coaxiaux pour fréquences radioélectriques de type SSMA

IEC 61169-18:2011

Documents
Document Sharing Hub

Full document details: IEC 61169-18 2011

THIS PUBLICATION IS COPYRIGHT PROTECTED
Copyright © 2011 IEC, Geneva, Switzerland

All rights reserved. Unless otherwise specified, no part of this publication may be reproduced or utilized in any form or by any means, electronic or mechanical, including photocopying and microfilm, without permission in writing from either IEC or IEC's member National Committee in the country of the requester.
If you have any questions about IEC copyright or have an enquiry about obtaining additional rights to this publication, please contact the address below or your local IEC member National Committee for further information.

Droits de reproduction réservés. Sauf indication contraire, aucune partie de cette publication ne peut être reproduite ni utilisée sous quelque forme que ce soit et par aucun procédé, électronique ou mécanique, y compris la photocopie et les microfilms, sans l'accord écrit de la CEI ou du Comité national de la CEI du pays du demandeur.
Si vous avez des questions sur le copyright de la CEI ou si vous désirez obtenir des droits supplémentaires sur cette publication, utilisez les coordonnées ci-après ou contactez le Comité national de la CEI de votre pays de résidence.

IEC Central Office
3, rue de Varembé
CH-1211 Geneva 20
Switzerland
Email: inmail@iec.ch
Web: www.iec.ch

About the IEC

The International Electrotechnical Commission (IEC) is the leading global organization that prepares and publishes International Standards for all electrical, electronic and related technologies.

About IEC publications

The technical content of IEC publications is kept under constant review by the IEC. Please make sure that you have the latest edition, a corrigenda or an amendment might have been published.

- Catalogue of IEC publications: www.iec.ch/searchpub
The IEC on-line Catalogue enables you to search by a variety of criteria (reference number, text, technical committee,…). It also gives information on projects, withdrawn and replaced publications.
- IEC Just Published: www.iec.ch/online_news/justpub
Stay up to date on all new IEC publications. Just Published details twice a month all new publications released. Available on-line and also by email.
- Electropedia: www.electropedia.org
The world's leading online dictionary of electronic and electrical terms containing more than 20 000 terms and definitions in English and French, with equivalent terms in additional languages. Also known as the International Electrotechnical Vocabulary online.
- Customer Service Centre: www.iec.ch/webstore/custserv
If you wish to give us your feedback on this publication or need further assistance, please visit the Customer Service Centre FAQ or contact us:
Email: csc@iec.ch
Tel.: +41 22 919 02 11
Fax: +41 22 919 03 00

A propos de la CEI

La Commission Electrotechnique Internationale (CEI) est la première organisation mondiale qui élabore et publie des normes internationales pour tout ce qui a trait à l'électricité, à l'électronique et aux technologies apparentées.

A propos des publications CEI

Le contenu technique des publications de la CEI est constamment revu. Veuillez vous assurer que vous possédez l'édition la plus récente, un corrigendum ou amendement peut avoir été publié.

- Catalogue des publications de la CEI: www.iec.ch/searchpub/cur_fut-f.htm
Le Catalogue en-ligne de la CEI vous permet d'effectuer des recherches en utilisant différents critères (numéro de référence, texte, comité d'études,…). Il donne aussi des informations sur les projets et les publications retirées ou remplacées.
- Just Published CEI: www.iec.ch/online_news/justpub
Restez informé sur les nouvelles publications de la CEI. Just Published détaille deux fois par mois les nouvelles publications parues. Disponible en-ligne et aussi par email.
- Electropedia: www.electropedia.org
Le premier dictionnaire en ligne au monde de termes électroniques et électriques. Il contient plus de 20 000 termes et définitions en anglais et en français, ainsi que les termes équivalents dans les langues additionnelles. Egalement appelé Vocabulaire Electrotechnique International en ligne.
- Service Clients: www.iec.ch/webstore/custserv/custserv_entry-f.htm
Si vous désirez nous donner des commentaires sur cette publication ou si vous avez des questions, visitez le FAQ du Service clients ou contactez-nous:
Email: csc@iec.ch
Tél.: +41 22 919 02 11
Fax: +41 22 919 03 00

Documents
Document Sharing Hub

Full document details: IEC 61169-18 2011

IEC 61169-18

Edition 1.0 2011-01

INTERNATIONAL STANDARD

NORME INTERNATIONALE

colour inside

Radio-frequency connectors – Part 18: Sectional specification – Radio frequency coaxial connectors of type SSMA

Connecteurs pour fréquences radioélectriques – Partie 18: Spécification intermédiaire – Connecteurs coaxiaux pour fréquences radioélectriques de type SSMA

INTERNATIONAL ELECTROTECHNICAL COMMISSION

COMMISSION ELECTROTECHNIQUE INTERNATIONALE

PRICE CODE
CODE PRIX

T

ICS 33.120.30

ISBN 978-2-88912-319-3

® Registered trademark of the International Electrotechnical Commission
Marque déposée de la Commission Electrotechnique Internationale

Documents
Document Sharing Hub

Full document details: IEC 61169-18 2011

CONTENTS

FOREWORD 4
1 Scope 6
2 Normative references 6
3 Mating face and gauge information 6
3.1 Dimensions - High performance connectors – Grade 1 6
3.1.1 Connector with pin-centre contact 7
3.1.2 Connector with socket-centre contact 8
3.2 Gauges 9
3.2.1 Gauge pins for socket-centre contact 9
3.2.2 Test procedure 9
3.3 Dimensions - standard test connectors – Grade 0 10
3.3.1 Connector with pin-centre contact 10
3.3.2 Connector with socket-centre contact 11
4 Quality assessment procedure 12
4.1 General 12
4.2 Standard ratings and characteristics (see Clause 6 of IEC 61169-1) 12
4.3 Test schedule and inspection requirements – Acceptance tests 15
4.3.1 Acceptance tests 15
4.3.2 Periodic tests 15
4.4 Procedures 18
4.4.1 Quality conformance inspection 18
4.4.2 Qualification approval and its maintenance 18
5 Instructions for preparation of detail specifications 18
5.1 General 18
5.2 Identification of the component 18
5.3 Performance 19
5.4 Marking, ordering information and related matters 19
5.5 Selection of tests, test conditions and severities 19
5.6 Blank detail specification pro-forma for type SSMA connector 20

Figure 1 – Connector with pin-centre contact (for dimensions and notes, see Table 1) 7
Figure 2 – Connector with socket-centre contact (for dimensions and notes, see Table 2) 8
Figure 3 – Gauge pins for socket-centre contact (for dimensions and notes, see Table 3) 9
Figure 4 – Connector with pin-centre contact (for dimensions and notes, see Table 4) 10
Figure 5 – Connector with socket-centre contact (for dimensions and notes, see Table 5) 11

Documents
Document Sharing Hub
Full document details: IEC 61169-18 2011

Table 1 – Dimensions of connector with pin-centre contact 7
Table 2 – Dimensions of connector with socket-centre contact 8
Table 3 – Dimensions of gauge pins for socket-centre contact 9
Table 4 – Dimensions of connector with pin-centre contact 10
Table 5 – Dimensions of connector with socket-centre contact 12
Table 6 – Rating and characteristics 13
Table 7 – Acceptance tests 15
Table 8 – Periodic tests 16

Documents
Document Sharing Hub

Full document details: IEC 61169-18 2011

INTERNATIONAL ELECTROTECHNICAL COMMISSION

RADIO-FREQUENCY CONNECTORS –

Part 18: Sectional specification – Radio frequency coaxial connectors of type SSMA

FOREWORD

1) The International Electrotechnical Commission (IEC) is a worldwide organization for standardization comprising all national electrotechnical committees (IEC National Committees). The object of IEC is to promote international co-operation on all questions concerning standardization in the electrical and electronic fields. To this end and in addition to other activities, IEC publishes International Standards, Technical Specifications, Technical Reports, Publicly Available Specifications (PAS) and Guides (hereafter referred to as "IEC Publication(s)"). Their preparation is entrusted to technical committees; any IEC National Committee interested in the subject dealt with may participate in this preparatory work. International, governmental and non-governmental organizations liaising with the IEC also participate in this preparation. IEC collaborates closely with the International Organization for Standardization (ISO) in accordance with conditions determined by agreement between the two organizations.
2) The formal decisions or agreements of IEC on technical matters express, as nearly as possible, an international consensus of opinion on the relevant subjects since each technical committee has representation from all interested IEC National Committees.
3) IEC Publications have the form of recommendations for international use and are accepted by IEC National Committees in that sense. While all reasonable efforts are made to ensure that the technical content of IEC Publications is accurate, IEC cannot be held responsible for the way in which they are used or for any misinterpretation by any end user.
4) In order to promote international uniformity, IEC National Committees undertake to apply IEC Publications transparently to the maximum extent possible in their national and regional publications. Any divergence between any IEC Publication and the corresponding national or regional publication shall be clearly indicated in the latter.
5) IEC itself does not provide any attestation of conformity. Independent certification bodies provide conformity assessment services and, in some areas, access to IEC marks of conformity. IEC is not responsible for any services carried out by independent certification bodies.
6) All users should ensure that they have the latest edition of this publication.
7) No liability shall attach to IEC or its directors, employees, servants or agents including individual experts and members of its technical committees and IEC National Committees for any personal injury, property damage or other damage of any nature whatsoever, whether direct or indirect, or for costs (including legal fees) and expenses arising out of the publication, use of, or reliance upon, this IEC Publication or any other IEC Publications.
8) Attention is drawn to the Normative references cited in this publication. Use of the referenced publications is indispensable for the correct application of this publication.
9) Attention is drawn to the possibility that some of the elements of this IEC Publication may be the subject of patent rights. IEC shall not be held responsible for identifying any or all such patent rights.

International Standard IEC 61169-18 has been prepared by subcommittee 46F: R.F. and microwave passive components, of IEC technical committee 46: Cables, wires, waveguides, R.F. connectors, R.F. and microwave passive components and accessories.

This first edition cancels and replaces IEC/PAS 61169-18, published in 2009, of which it constitutes a minor revision. The only change between the PAS and this standard is the removal of inch dimensions for each of the figures.

The text of this standard is based on the following documents:

CDV	Report on voting
46F/136/CDV	46F/162/RVC

Full information on the voting for the approval of this standard can be found in the report on voting indicated in the above table.

Documents
Document Sharing Hub
Full document details: IEC 61169-18 2011

The French version of this standard has not been voted upon.

This publication has been drafted in accordance with the ISO/IEC Directives, Part 2.

A list of all parts of the IEC 61169 series, published under the general title *Radio-frequency connectors*, can be found on the IEC website.

The committee has decided that the contents of this publication will remain unchanged until the stability date indicated on the IEC web site under "http://webstore.iec.ch" in the data related to the specific publication. At this date, the publication will be

- reconfirmed,
- withdrawn,
- replaced by a revised edition, or
- amended.

IMPORTANT – The 'colour inside' logo on the cover page of this publication indicates that it contains colours which are considered to be useful for the correct understanding of its contents. Users should therefore print this document using a colour printer.

Documents
Document Sharing Hub

Full document details: IEC 61169-18 2011

RADIO-FREQUENCY CONNECTORS –

Part 18: Sectional specification – Radio frequency coaxial connectors of type SSMA

1 Scope

SSMA series connectors with characteristic impedance 50 Ω are used for millimeter wave applications, connecting with RF cables or micro strips. The operating frequency limit is up to 35 GHz. The coupling thread is 10-36 UNS thread.

This sectional specification provides information and rules for preparation of detail specification of SSMA series R.F connectors together with the pro-forma blank detail specification.

It also prescribes mating face dimensions for grade 1 high performance connectors, dimensional detail of grade 0 standard test connectors, gauging information and tests selected from IEC 61169-1 applicable to all detail specifications relating to SSMA series RF connectors.

This specification indicates recommended performance characteristics to be considered when writing a detail specification and it covers test schedules and inspection requirements for assessment levels M and H.

2 Normative references

The following referenced documents are indispensable for the application of this document. For dated references, only the edition cited applies. For undated references, the latest edition of the referenced document (including any amendments) applies.

IEC 61169-1:19981992, *Radio-frequency connectors – Part 1: Generic specification – General requirements and measuring methods*[1]
Amendment 1 (1996)
Amendment 2 (1997)

3 Mating face and gauge information

3.1 Dimensions – High performance connectors – Grade 1

All undimensioned pictorial configurations are for reference purpose only.

[1] There exists a consolidated edition 1.2 (1998) that comprises IEC 61169-1:1992, its Amendment 1:1996 and its Amendment 2:1997.

AVA Documents
Document Sharing Hub

Full document details: IEC 61169-18 2011

3.1.1 Connector with pin-centre contact

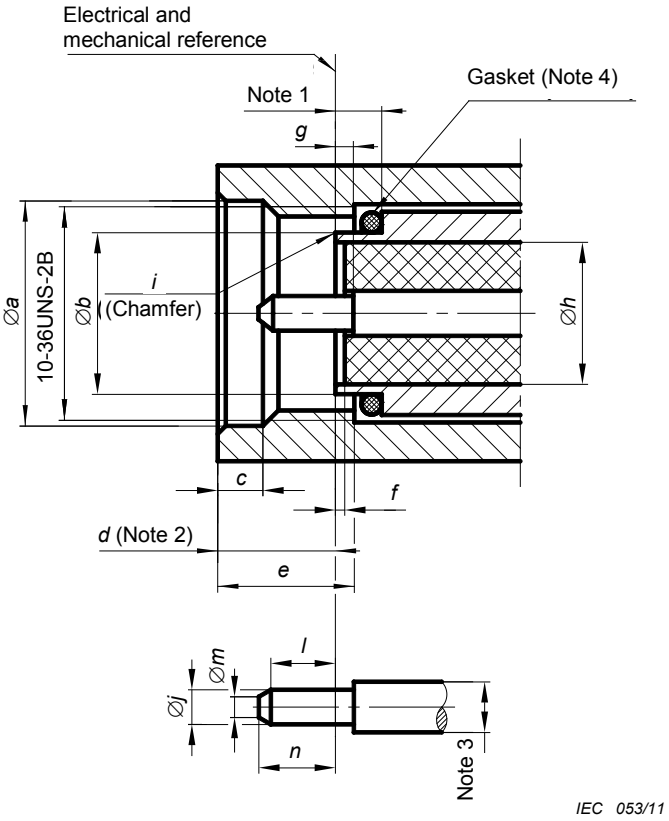

Figure 1 – Connector with pin-centre contact (for dimensions and notes, see Table 1)

Table 1 – Dimensions of connector with pin-centre contact

Ref.	mm	
	Min.	Max.
a	4,98	-
b	3,15	3,22
c	0,38	1,14
d	-	3,43
e	2,54	-
f	0,00	0,18
g	0,00	0,25
h	2,79 nominal	
i	0,08 max. × 45° or R0,08 max.	
j	0,495	0,528
l	1,00	-
m	-	0,25
n	-	1,65

Documents
Document Sharing Hub
Full document details: IEC 61169-18 2011

NOTE 1 Dimensions are such that the reference planes coincide and the connectors meet the required environmental performance.

NOTE 2 Dimension for coupling nut to screw forward.

NOTE 3 The diameters are chosen upon the assumption that the PTFE dielectric has a dielectric constant of 2,02 to give an impedance of 50 Ω.

NOTE 4 For grade 1 connectors, the design of which is free, the sealing gasket is mandatory.

3.1.2 Connector with socket-centre contact

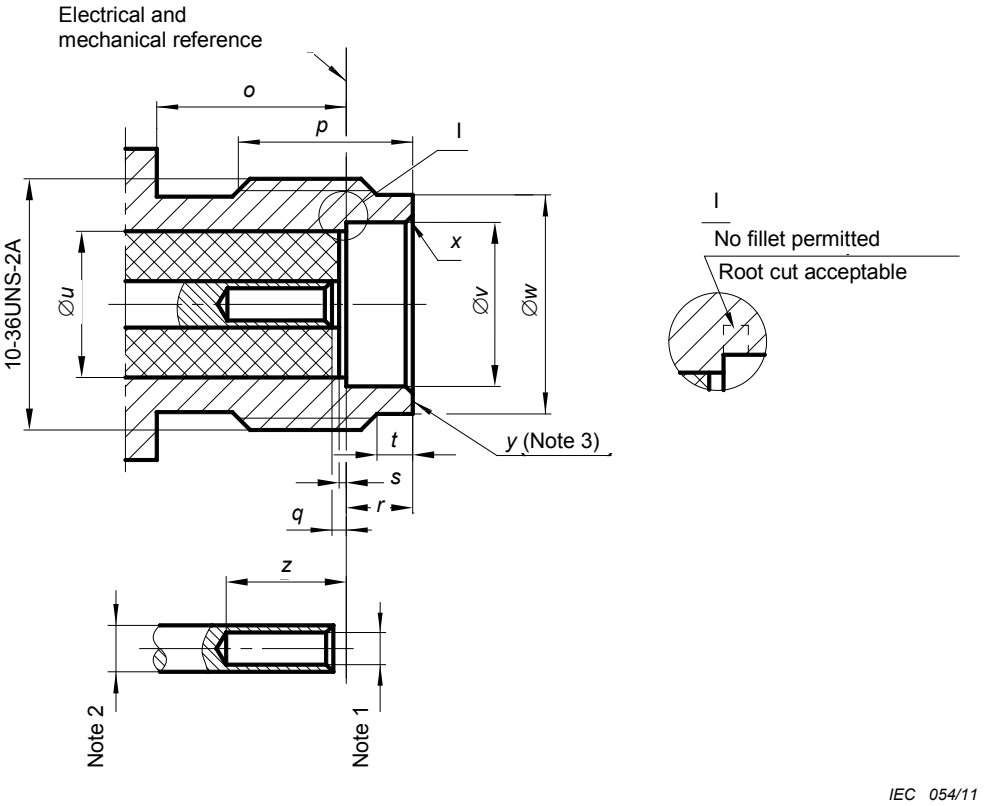

Figure 2 – Connector with socket-centre contact (for dimensions and notes, see Table 2)

Table 2 – Dimensions of connector with socket-centre contact

Ref.	mm	
	Min.	Max.
o	3,91	-
p	4,32	-
q	0,00	0,25
r	1,88	1,98
s	0,00	0,18
t	0,38	1,14
u	2,79 nominal	
v	3,231	3,300
w	3,89	4,06

Documents
Document Sharing Hub
Full document details: IEC 61169-18 2011

Ref.	mm	
	Min.	Max.
x	45°	
y	0,25	-
z	2,92	-

NOTE 1 Resilient contact may be closed or open entry, method of resilience is optional.

NOTE 2 The diameters are chosen upon the assumption that the PTFE dielectric has a dielectric constant of 2,02 to give an impedance of 50 Ω.

NOTE 3 *y* refers to the width of the end surface platform.

3.2 Gauges

3.2.1 Gauge pins for socket-centre contact

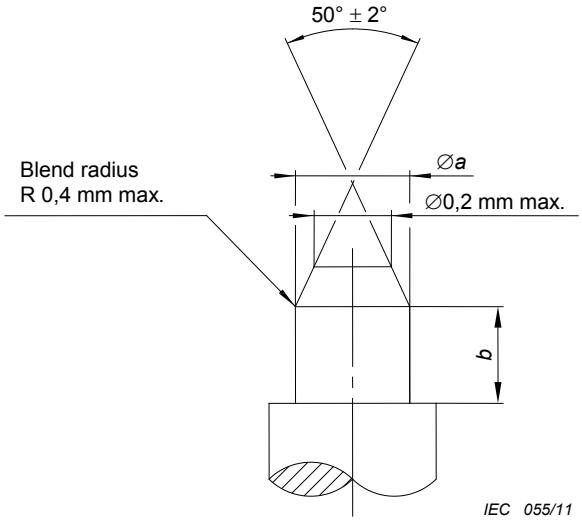

Figure 3 – Gauge pins for socket-centre contact (for dimensions and notes, see Table 3)

Table 3 – Dimensions of gauge pins for socket-centre contact

Gauge A **Maximum material for sizing purposes**			**Gauge B** **Minimum material for measurement of retention force**	
Ref.	mm		mm	
	Min.	Max.	Min.	Max.
a	0,528	0,533	0,492	0,495
b	1,25	1,35	1,25	1,35
Material: steel, polished, surface roughness: Ra=0,4 μm maximum. Mass of gauge: 26 g ± 1 g.				

3.2.2 Test procedure

The gauge A shall be inserted into the socket-centre contact three times with a minimum depth of 1,25 mm.

AVA Documents Document Sharing Hub

This is a sizing operation and should only be carried out when the socket-centre contact is removed from the connector.

After this, the gauge B shall have a withdrawal force of 0,25 N minimum after inserted into socket-centre contact .The contact shall retain the mass of the gauge in a vertical downward position.

This test also shall be carried out on connector when the socket-centre contact is not removed. In this case, there is not any sizing operation.

3.3 Dimensions – Standard test connectors – Grade 0

3.3.1 Connector with pin-centre contact

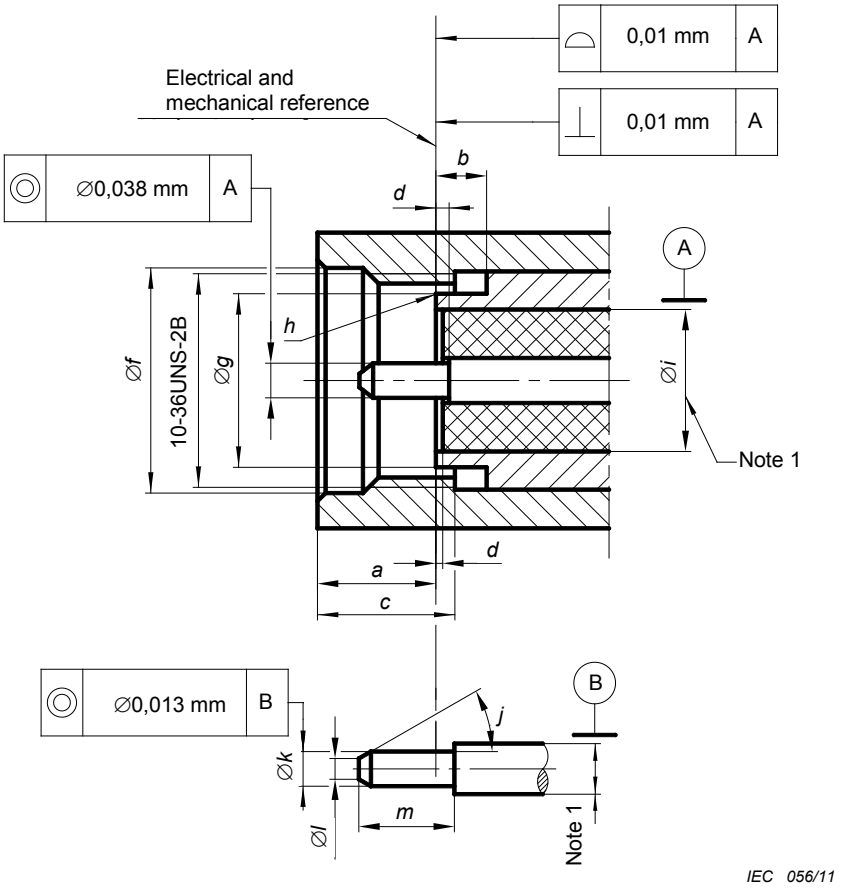

Figure 4 – Connector with pin-centre contact (for dimensions and notes, see Table 4)

Table 4 – Dimensions of connector with pin-centre contact

Ref.	mm	
	Min.	Max.
a	2,54	3,40
b	2,03	-
c	2,54	4,32
d	0,000	0,076
e	0,000	0,050
f	4,98	5,21

Documents
Document Sharing Hub
Full document details: IEC 61169-18 2011

Ref.	mm	
	Min.	Max.
g	3,17	3,22
h	0,08 max × 45°or R0,08 max	
i	2,79 nominal	
j	35°	48°
k	0,495	0,528
l	-	0,25
m	1,40	1,65
NOTE 1 The diameters are chosen upon the assumption that the PTFE dielectric has a dielectric constant of 2,02 to give an impedance of 50 Ω ± 0,5 Ω.		

3.3.2 Connector with socket-centre contact

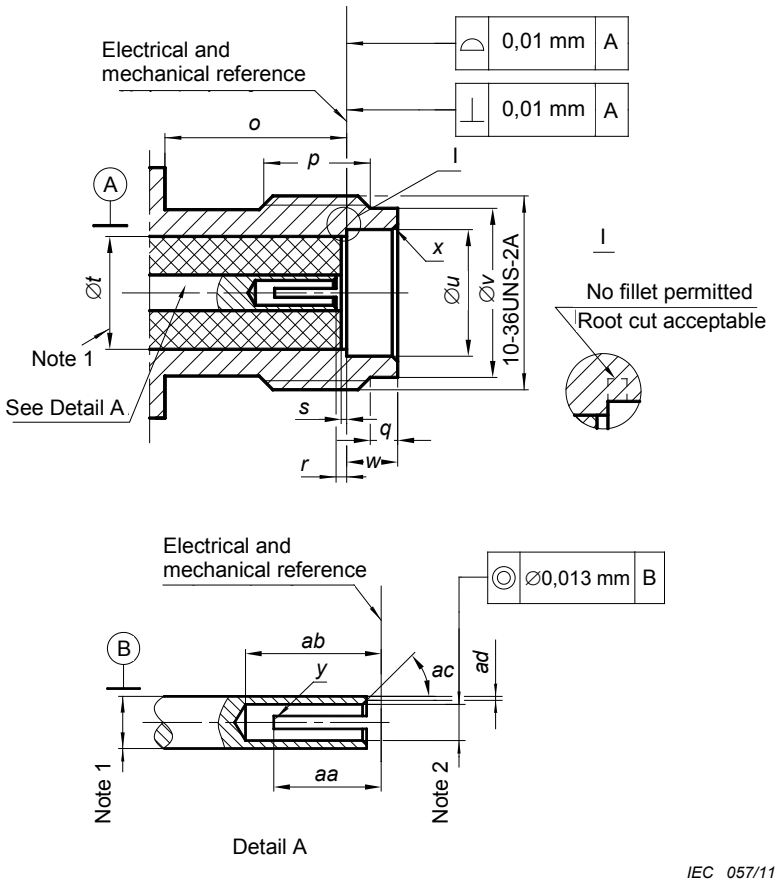

Figure 5 – Connector with socket-centre contact (for dimensions and notes, see Table 5)

Documents
Document Sharing Hub
Full document details: IEC 61169-18 2011

Table 5 – Dimensions of connector with socket-centre contact

Ref.	mm	
	Min.	Max.
o	3,89	-
p	3,81	-
q	0,38	1,14
r	0,000	0,076
s	0,000	0,050
t	2,79 nominal	
u	3,23	3,28
v	3,89	4,04
w	1,88	1,98
x	0,13 max × 45°	
y	2 slots - 0,13/0,15 wide	
aa	1,52	1,80
ab	2,92	3,30
ac	42°	48°
ad	0,05	-

NOTE 1 The diameters are chosen upon the assumption that the PTFE dielectric has a dielectric constant of 2,02 to give an impedance of 50 Ω ± 0,5 Ω.

NOTE 2 Design for slotting is optional, and should meet electrical and mechanical requirements, when mating with Ø0,495 mm to Ø 0,528 mm pin.

4 Quality assessment procedure

4.1 General

The following subclauses provide recommended rating, performance and test conditions to be considered when writing a detail specification. They also provide an appropriate schedule of tests with minimum levels of conformance inspection sampling, together with the pro-forma blank detail specification (BDS) and instructions for the preparation of a detail specification.

4.2 Standard ratings and characteristics (see Clause 6 of IEC 61169-1)

The values indicated below are recommended for SSMA series RF connectors and are given for the writer of the detail specification. They are applicable for the condition when the connectors are fully mated.

Certain tests are listed without any recommended values being given. These tests will usually not be required. When these tests are required, appropriate values shall be entered in the detail specification at the discretion of the specification writer.

Documents
Document Sharing Hub

Full document details: IEC 61169-18 2011

Table 6 – Rating and characteristics

Rating and characteristics	IEC 61169-1 Subclause	Values	Remarks including any deviations from standard test methods
Electrical			
Nominal impedance		50 Ω	
Frequency range Grade 1 connectors		DC to 35 GHz	Or upper frequency limit of cable
Reflection factor[a] Grade 1 connectors – For flexible cable – straight styles – right-angle styles – For semi-rigid and semi-flexible cable – straight styles – right-angle styles – Component mounting styles – Solder bucket and PCB mounting styles	9.2.1	≤0,090+0,01f ≤0,090+0,011f ≤0,034+0,004f ≤0,048+0,004f See DS See DS	
Centre contact resistance[b] – initial – after conditioning	9.2.3	≤4,0 mΩ ≤10,0 mΩ	
Outer conductor continuity [b] – initial – after conditioning	9.2.3	≤2,5 mΩ ≤7,5 mΩ	
Insulation resistance [b] – initial – after conditioning	9.2.5	≥ 1 GΩ ≥ 200 MΩ	
Proof voltage at sea-level [c d] – non-cable styles – semi-rigid and semi-flexible 2,16 mm (0,086 in) diameter – semi-rigid and semi-flexible 1,19 mm (0,047 in) diameter	9.2.6	750 V 750 V 500 V	
Proof voltage at 4,4 kPa [c d] – non-cable styles – semi-rigid and semi-flexible 2,16 mm (0,086 in) diameter – semi-rigid and semi-flexible 1,19 mm (0,047 in) diameter		150 V 150 V 100 V	4,4 kPa approximately equivalent to 20 km
Environmental test voltage at sea level[c d] – non-cable styles – semi-rigid and semi-flexible 2,16 mm (0,086 in) diameter – semi-rigid and semi-flexible 1,19 mm (0,047 in) diameter		250 V 250 V 175 V	
Environmental test voltage at 4,4 kPa[c d] – non-cable styles – semi-rigid and semi-flexible 2,16 mm (0,086 in) diameter	9.2.6	65 V 65 V	4,4 kPa approximately equivalent to 20 km

AVA Documents
Document Sharing Hub

Rating and characteristics	IEC 61169-1 Subclause	Values	Remarks including any deviations from standard test methods
– semi-rigid and semi-flexible 1,19 mm (0,047 in) diameter		45 V	
Screening effectiveness (straight cables only)[g]	9.2.8	≥ 90 dB, at 1 GHz	
Discharge test (corona effect)	9.2.9	See DS	Extinction voltage
Mechanical			
Gauge retention force (resilient contacts) – centre contacts – outer contacts	9.3.4	 ≥ 0,25 N na[f]	
Centre contact captivation – axial force – torque	9.3.5	 22 N ≤0,018 N·m	Maximum displacement 0,25 mm in each direction
Engagement and separation – coupling nut friction	9.3.6	 ≤0,12 N·m	 Can be carried out by hand
Coupling moment – normally moment – moment resistance	9.3.6	 0,6 to 0,8 N·m 1,1 N·m	
Mechanical tests on cable fixing – cable rotation (nutation) – cable pulling – cable bending – cable torsion	 9.3.7.2 9.3.8 9.3.9 9.3.10	 See DS See DS See DS See DS	
Strength of coupling mechanism	9.3.11	≥100 N	
Bending moment	9.3.12	0,15 N·m	
Vibration	9.3.3	100 m/s^2 10 Hz to 500 Hz	10 g_n
Bump	9.3.13	na[f]	
Shock	9.3.14	500 m/s^2 1/2 sine wave 11 ms	50 g_n
Environmental			
Climatic category	9.4.2	A: 55/125/21 B: 40/085/21	
Sealing non-hermetic	9.4.5.1	≤100 kPa·cm^3/h max	100 kPa to 110 kPa differential
Hermetic	9.4.5.2	≤10^{-3} Pa·cm^3/s	100 kPa to 110 kPa differential
Salt mist	9.4.6	48 h spray	
Sulphur dioxide	9.4.8	na[f]	
Endurance			
Mechanical endurance	9.5	500 operations	
High temperature endurance [e]	9.6	Category A: 250 h at 125 °C Category A: 250 h at 85 °C	

AVA Documents
Document Sharing Hub
Full document details: IEC 61169-18 2011

a	These values apply to basic connector. In practice, these may be influenced by the cable used and reference should always be made to the actual values given in the detail specification.
b	Values for a single pair of connectors.
c	Voltages are r.m.s values of AC at 40 Hz to 65 Hz, unless otherwise specified.
d	Some cables usable with these connectors have ratings lower than the values given here.
e	For certain connectors, the upper temperature limit is restricted by the cable characteristics. Reference should be made to the relevant cable specification. When semi-rigid and semi-flexible cables are used, the upper temperature is limited to 115 °C maximum.
f	na - not applicable.
g	When interfaces are fully mated.

4.3 Test schedule and inspection requirements – Acceptance tests

4.3.1 Acceptance tests

Table 7 – Acceptance tests

	Test method	Assessment level M (higher)				Assessment level H (lower)			
	IEC 61169-1 subclause	Test required	IL	AQL %	Period	Test required	IL	AQL %	Period
Group A1 Visual examination	9.1.2	a	II	1,0	Lot By Lot	a	S-3	1,5	Lot By Lot
Group B1 Outline dimension	9.1.3.1	a	S-4	0,40		a	S-3	4,0	
Mechanical compatibility	9.1.3.3	a	II	1,0		a	S-3	1,5	
Engagement and separation	9.3.6	a	S-4	0,40		a	S-3	1,5	
Gauge retention (resilient contacts)	9.3.4	ia	II	1,0		ia	S-3	1,5	
Sealing non-hermetic	9.4.5.1	ia	II	0,65		ia	S-3	1,0	
hermetic	9.4.5.2	ia	II	0,015		ia	II	0,025	
Voltage proof	9.2.6	a	S-4	0,40		a	II	4,0	
Solderability (d)	9.3.2.1.1	ia	S-4	0,40		ia	S-3	4,0	
Insulation resistance	9.2.5	a	S-4	0,40		a	S-3	4,0	
For the symbols, abbreviations and procedures see the end of Table 8.									

4.3.2 Periodic tests

There are no group C tests for levels H and M.

AVA Documents
Document Sharing Hub
Full document details: IEC 61169-18 2011