IEC 61169-4

Edition 1.0 2008-04

INTERNATIONAL STANDARD

NORME INTERNATIONALE

colour inside

Radio-frequency connectors – Part 4: RF coaxial connectors with inner diameter of outer conductor 16 mm (0,63 in) with screw lock – Characteristic impedance 50 Ω (type 7-16)

Connecteurs pour fréquences radioélectriques – Partie 4: Connecteurs coaxiaux pour fréquences radioélectriques de diamètre intérieur du conducteur extérieur de 16 mm (0,63 in) à verrouillage à vis – Impédance caractéristique 50 Ω (type 7-16)

IEC 61169-4:2008-04(EN-FR)

AVA Documents
Document Sharing Hub

Full document details: IEC 61169-4 2008

THIS PUBLICATION IS COPYRIGHT PROTECTED

Copyright © 2008 IEC, Geneva, Switzerland

All rights reserved. Unless otherwise specified, no part of this publication may be reproduced or utilized in any form or by any means, electronic or mechanical, including photocopying and microfilm, without permission in writing from either IEC or IEC's member National Committee in the country of the requester. If you have any questions about IEC copyright or have an enquiry about obtaining additional rights to this publication, please contact the address below or your local IEC member National Committee for further information.

Droits de reproduction réservés. Sauf indication contraire, aucune partie de cette publication ne peut être reproduite ni utilisée sous quelque forme que ce soit et par aucun procédé, électronique ou mécanique, y compris la photocopie et les microfilms, sans l'accord écrit de l'IEC ou du Comité national de l'IEC du pays du demandeur. Si vous avez des questions sur le copyright de l'IEC ou si vous désirez obtenir des droits supplémentaires sur cette publication, utilisez les coordonnées ci-après ou contactez le Comité national de l'IEC de votre pays de résidence.

IEC Central Office
3, rue de Varembé
CH-1211 Geneva 20
Switzerland

Tel.: +41 22 919 02 11
Fax: +41 22 919 03 00
info@iec.ch
www.iec.ch

About the IEC
The International Electrotechnical Commission (IEC) is the leading global organization that prepares and publishes International Standards for all electrical, electronic and related technologies.

About IEC publications
The technical content of IEC publications is kept under constant review by the IEC. Please make sure that you have the latest edition, a corrigenda or an amendment might have been published.

IEC Catalogue - webstore.iec.ch/catalogue
The stand-alone application for consulting the entire bibliographical information on IEC International Standards, Technical Specifications, Technical Reports and other documents. Available for PC, Mac OS, Android Tablets and iPad.

IEC publications search - www.iec.ch/searchpub
The advanced search enables to find IEC publications by a variety of criteria (reference number, text, technical committee,…). It also gives information on projects, replaced and withdrawn publications.

IEC Just Published - webstore.iec.ch/justpublished
Stay up to date on all new IEC publications. Just Published details all new publications released. Available online and also once a month by email.

Electropedia - www.electropedia.org
The world's leading online dictionary of electronic and electrical terms containing more than 30 000 terms and definitions in English and French, with equivalent terms in 14 additional languages. Also known as the International Electrotechnical Vocabulary (IEV) online.

IEC Glossary - std.iec.ch/glossary
More than 55 000 electrotechnical terminology entries in English and French extracted from the Terms and Definitions clause of IEC publications issued since 2002. Some entries have been collected from earlier publications of IEC TC 37, 77, 86 and CISPR.

IEC Customer Service Centre - webstore.iec.ch/csc
If you wish to give us your feedback on this publication or need further assistance, please contact the Customer Service Centre: csc@iec.ch.

A propos de l'IEC
La Commission Electrotechnique Internationale (IEC) est la première organisation mondiale qui élabore et publie des Normes internationales pour tout ce qui a trait à l'électricité, à l'électronique et aux technologies apparentées.

A propos des publications IEC
Le contenu technique des publications IEC est constamment revu. Veuillez vous assurer que vous possédez l'édition la plus récente, un corrigendum ou amendement peut avoir été publié.

Catalogue IEC - webstore.iec.ch/catalogue
Application autonome pour consulter tous les renseignements bibliographiques sur les Normes internationales, Spécifications techniques, Rapports techniques et autres documents de l'IEC. Disponible pour PC, Mac OS, tablettes Android et iPad.

Recherche de publications IEC - www.iec.ch/searchpub

La recherche avancée permet de trouver des publications IEC en utilisant différents critères (numéro de référence, texte, comité d'études,…). Elle donne aussi des informations sur les projets et les publications remplacées ou retirées.

IEC Just Published - webstore.iec.ch/justpublished

Restez informé sur les nouvelles publications IEC. Just Published détaille les nouvelles publications parues. Disponible en ligne et aussi une fois par mois par email.

Electropedia - www.electropedia.org

Le premier dictionnaire en ligne de termes électroniques et électriques. Il contient plus de 30 000 termes et définitions en anglais et en français, ainsi que les termes équivalents dans 14 langues additionnelles. Egalement appelé Vocabulaire Electrotechnique International (IEV) en ligne.

Glossaire IEC - std.iec.ch/glossary
Plus de 55 000 entrées terminologiques électrotechniques, en anglais et en français, extraites des articles Termes et Définitions des publications IEC parues depuis 2002. Plus certaines entrées antérieures extraites des publications des CE 37, 77, 86 et CISPR de l'IEC.

Service Clients - webstore.iec.ch/csc

Si vous désirez nous donner des commentaires sur cette publication ou si vous avez des questions contactez-nous: csc@iec.ch.

Documents
Document Sharing Hub

Full document details: IEC 61169-4 2008

IEC 61169-4

Edition 1.0 2008-04

INTERNATIONAL STANDARD

NORME INTERNATIONALE

colour inside

Radio-frequency connectors – Part 4: RF coaxial connectors with inner diameter of outer conductor 16 mm (0,63 in) with screw lock – Characteristic impedance 50 Ω (type 7-16)

Connecteurs pour fréquences radioélectriques – Partie 4: Connecteurs coaxiaux pour fréquences radioélectriques de diamètre intérieur du conducteur extérieur de 16 mm (0,63 in) à verrouillage à vis – Impédance caractéristique 50 Ω (type 7-16)

INTERNATIONAL ELECTROTECHNICAL COMMISSION

COMMISSION ELECTROTECHNIQUE INTERNATIONALE

PRICE CODE
CODE PRIX T

ICS 29.120.10

ISBN 978-2-8322-1353-7

Warning! Make sure that you obtained this publication from an authorized distributor.
Attention! Veuillez vous assurer que vous avez obtenu cette publication via un distributeur agréé.

AVA Documents
Document Sharing Hub

® Registered trademark of the International Electrotechnical Commission
Marque déposée de la Commission Electrotechnique Internationale

Full document details: IEC 61169-4 2008

CONTENTS

FOREWORD 4
1 Scope 6
2 Normative references 6
3 Mating face and gauge information 6
3.1 Dimensions –General connectors – Grade 2 7
3.1.1 Connector with pin centre contact 7
3.1.2 Connector with socket centre contact 8
3.2 Gauges for general purpose connectors - Grade 2 9
3.2.1 Gauges for connector with socket centre contact 9
3.3 Dimensions – standard test connectors – Grade 0 10
3.3.1 Standard test connector with pin centre contact 10
3.3.2 Standard test connector with socket centre contact 10
4 Quality assessment procedures 11
4.1 General 11
4.2 Ratings and characteristics 11
4.3 Test Schedule and Inspection requirements 14
4.3.1 Acceptance tests 14
4.3.2 Periodic tests 15
4.4 Procedures 16
4.4.1 Quality conformance inspection 16
4.4.2 Qualification approval and its maintenance 16
5 Instructions for preparation of detail specifications 17
5.1 General 17
5.2 Identification of the Detail specification 17
5.3 Identification of the component 17
5.4 Performance 17
5.5 Marking, ordering information and related matters 18
5.6 Selection of tests, test conditions and severities 18
5.7 Blank detail specification pro-forma for type 7-16 connector 19

Figure 1 – Connector with pin centre contact 7
Figure 2 – Connector with socket centre contact 8
Figure 3 – Gauge pin for socket centre contact 9
Figure 4 – Gauge ring for socket outer contact 9
Figure 5 – Slotted centre contact 11

Table 1 – Connector with pin centre contact. 7
Table 2 – Connector with socket centre contact 8
Table 3 – Tolerance for the standard connector with pin centre contact. 10
Table 4 – Tolerance for the standard connector with socket centre contact 10
Table 5 – Slotted centre contact 11
Table 6 – Preferred climatic categories (see IEC 60068-1): 12
Table 7 – Ratings and characteristics 13

AVA Documents
Document Sharing Hub

Full document details: IEC 61169-4 2008

Table 8 – Acceptance tests 14
Table 9 – Periodic tests 15

Documents
Document Sharing Hub

Full document details: IEC 61169-4 2008

INTERNATIONAL ELECTROTECHNICAL COMMISSION

RADIO-FREQUENCY CONNECTORS –

Part 4: RF coaxial connectors with inner diameter of outer conductor 16 mm (0,63 in) with screw lock – Characteristic impedance 50 Ω (type 7-16)

FOREWORD

1) The International Electrotechnical Commission (IEC) is a worldwide organization for standardization comprising all national electrotechnical committees (IEC National Committees). The object of IEC is to promote international co-operation on all questions concerning standardization in the electrical and electronic fields. To this end and in addition to other activities, IEC publishes International Standards, Technical Specifications, Technical Reports, Publicly Available Specifications (PAS) and Guides (hereafter referred to as "IEC Publication(s)"). Their preparation is entrusted to technical committees; any IEC National Committee interested in the subject dealt with may participate in this preparatory work. International, governmental and non-governmental organizations liaising with the IEC also participate in this preparation. IEC collaborates closely with the International Organization for Standardization (ISO) in accordance with conditions determined by agreement between the two organizations.
2) The formal decisions or agreements of IEC on technical matters express, as nearly as possible, an international consensus of opinion on the relevant subjects since each technical committee has representation from all interested IEC National Committees.
3) IEC Publications have the form of recommendations for international use and are accepted by IEC National Committees in that sense. While all reasonable efforts are made to ensure that the technical content of IEC Publications is accurate, IEC cannot be held responsible for the way in which they are used or for any misinterpretation by any end user.
4) In order to promote international uniformity, IEC National Committees undertake to apply IEC Publications transparently to the maximum extent possible in their national and regional publications. Any divergence between any IEC Publication and the corresponding national or regional publication shall be clearly indicated in the latter.
5) IEC provides no marking procedure to indicate its approval and cannot be rendered responsible for any equipment declared to be in conformity with an IEC Publication.
6) All users should ensure that they have the latest edition of this publication.
7) No liability shall attach to IEC or its directors, employees, servants or agents including individual experts and members of its technical committees and IEC National Committees for any personal injury, property damage or other damage of any nature whatsoever, whether direct or indirect, or for costs (including legal fees) and expenses arising out of the publication, use of, or reliance upon, this IEC Publication or any other IEC Publications.
8) Attention is drawn to the Normative references cited in this publication. Use of the referenced publications is indispensable for the correct application of this publication.
9) Attention is drawn to the possibility that some of the elements of this IEC Publication may be the subject of patent rights. IEC shall not be held responsible for identifying any or all such patent rights.

International Standard IEC 61169-4 has been prepared by subcommittee 46F: RF and microwave passive components, of IEC technical committee 46: Cables, wires, waveguides, r.f. connectors, r.f. and microwave passive components and accessories.This standard cancels and replaces IEC/PAS 61169-4 published in 2006. This first edition constitutes a technical revision.

This bilingual version (2014-01) corresponds to the monolingual English version, published in 2008-04.

The text of this standard is based on the following documents:

FDIS	Report on voting
46F/60/FDIS	46F/71/RVD

Documents
Document Sharing Hub

Full document details: IEC 61169-4 2008

Full information on the voting for the approval of this standard can be found in the report on voting indicated in the above table.

The French version of this standard has not been voted upon.

This publication has been drafted in accordance with the ISO/IEC Directives, Part 2.

A list of all parts of IEC 61169 series, published under the general title *Radio-frequency connectors,* can be found on the IEC website.

The committee has decided that the contents of this publication will remain unchanged until the maintenance result date indicated on the IEC web site under "http://webstore.iec.ch" in the data related to the specific publication. At this date, the publication will be

- reconfirmed,
- withdrawn,
- replaced by a revised edition, or
- amended.

IMPORTANT – The 'colour inside' logo on the cover page of this publication indicates that it contains colours which are considered to be useful for the correct understanding of its contents. Users should therefore print this document using a colour printer.

Documents
Document Sharing Hub

Full document details: IEC 61169-4 2008

RADIO-FREQUENCY CONNECTORS –

Part 4: RF coaxial connectors with inner diameter of outer conductor 16 mm (0,63 in) with screw lock – Characteristic impedance 50 Ω (type 7-16)

1 Scope

This part of IEC 61169, which is a sectional specification (SS), provides information and rules for the preparation of detail specifications (DS) for type 7-16 R.F. coaxial connectors with screw lock.

The connectors are normally used with 50 Ω flexible and semi-rigid r.f. cables for middle power applications in an operating frequency range up to 7,5 GHz.

It describes the interface dimensions for general purpose grade 2 connectors, dimensional details for standard test connectors, grade 0, together with gauging information and the mandatory tests selected from QC 22000 (IEC 61169-1), applicable to all DS relating to type 7-16 connectors.

This specification indicates the recommended performance characteristics to be considered when writing a DS and covers test schedules and inspection requirements.

2 Normative references

The following referenced documents are indispensable for the application of this document. For dated references, only the edition cited applies. For undated references, the latest edition of the referenced document (including any amendments) applies.

IEC 61169-1, *Radio-frequency connectors – Part 1: Generic specification – General requirements and measuring methods*

IEC 62037, *RF connectors, connector cable assemblies, and cables - Intermodulation level measurement*

3 Mating face and gauge information

Metric dimension are original dimensions.

All undimensioned pictorial configurations are for reference purpose only.

Documents
Document Sharing Hub

Full document details: IEC 61169-4 2008

3.1 Dimensions – General connectors – Grade 2

3.1.1 Connector with pin centre contact

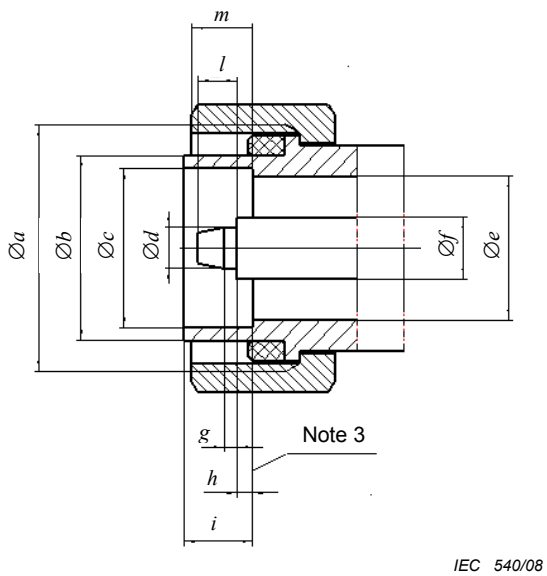

NOTE For dimensions see Table 1.

Figure 1 – Connector with pin centre contact

Table 1 – Connector with pin centre contact

Reference	Millimetres		Inches		Notes
	Minimum	Maximum	Minimum	Maximum	
a	M29×1,5		M29×1,5		2
b	20,6	21,4	0,811	0,843	
c	18,03	18,21	0,7098	0,7169	
d	4,96	5,04	0,1953	0,1984	
e	15,85	16,25	0,6240	0,6398	
f	7 (nominal)		0,276 (nominal)		1
g	1,4	1,6	0,0551	0,0630	
h	1,47	1,77	0,0579	0,0697	
i	7,00	8,00	0,276	0,315	
l	-	4,5	-	0,177	
m	7,00	9,00	0,276	0,354	

NOTE 1 The tolerance on this dimension is determined by the tolerance of characteristic impedance.

NOTE 2 M29×1,5 indicates metric screw thread with nominal diameter 29 mm (1,141 in) and pitch 1,5 mm (0,059 in).

NOTE 3 Mechanical and electrical reference plane (see Figure 1).

Documents
Document Sharing Hub
Full document details: IEC 61169-4 2008

3.1.2 Connector with socket centre contact

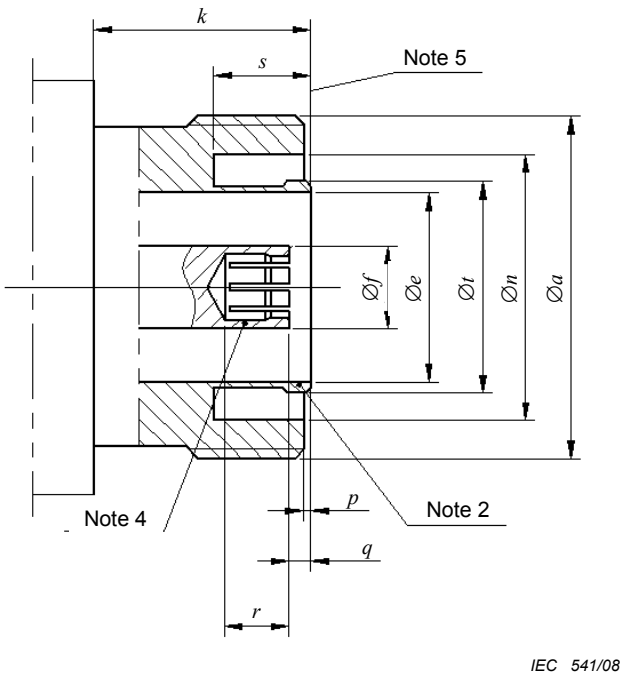

NOTE For dimensions see Table 2.

Figure 2 – Connector with socket centre contact

Table 2 – Connector with socket centre contact

Reference	Millimetres		Inches		Note
	Minimum	Maximum	Minimum	Maximum	
a	M29×1,5		M29×1,5		3
e	15,85	16,25	0,6240	0,6398	
f	7(nominal)		0,276(nominal)		1
k	10	-	0,394	-	
n	22,1	22,9	0,870	0,902	
p	0,5	0,7	0,0197	0,0276	
q	1,77	2,07	0,0697	0,0815	
r	5	-	0,197	-	
s	8,1	-	0,319	-	
t	17,84	18,02	0,7024	0,7094	2

NOTE 1 The tolerances on this dimensions is determined by the tolerance of characteristic impedance.

NOTE 2 Standard is a non-slotted outer contact. If a slotted outer contact is required, the slotting should be bent outwards to 18,5 mm (0,728 in) maximum. The slotted sleeve should meet the gauge retention force (see Figure 2).

NOTE 3 M29×1,5 indicates metric screw thread with nominal diameter 29 mm (1,141 in) and pitch 1,5 mm (0,59 in).

NOTE 4 Slot design optional. Contact to be closed to meet the gauge retention force (see Figure 2).

NOTE 5 Mechanical and electrical reference plane (see Figure 2).

Documents
Document Sharing Hub
Full document details: IEC 61169-4 2008

3.2 Gauges for general purpose connectors – Grade 2

3.2.1 Gauges for connector with socket centre contact

3.2.1.1 Centre contact

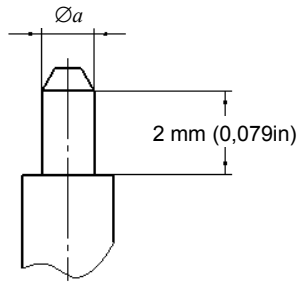

IEC 542/08

Figure 3 – Gauge pin for socket centre contact

Test procedure

a) A steel test pin (Figure 3) with a diameter a of $5{,}1^{+0}_{-0{,}01}$ mm ($0{,}2008^{+0}_{-0{,}0004}$ in) and a 0,4 µm (16 µin) maximum finish shall be inserted once into the centre contact a minimum distance of 2 mm (0,079 in).

b) A second steel test pin (Figure 3) with a diameter a of $4{,}96^{+0}_{-0{,}01}$ mm ($0{,}1953^{+0}_{-0{,}0004}$ in) and a 0,4 µm (16 µin) maximum finish shall have a minimum retention force of 6 N after insertion into the centre contact.

It is recommended that this gauge should have a mass of 600 g.

3.2.1.2 Outer contact

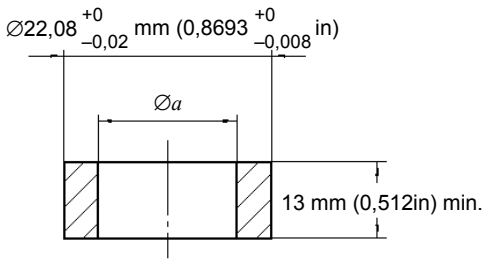

IEC 543/08

Figure 4 – Gauge ring for socket outer contact

a) For non-slotted outer contacts, a steel test ring (Figure 4) with inner diameter a of $18{,}03^{0}_{-0.01}$ mm ($0{,}7098^{0}_{-0.0004}$ in) and a 0,4 µm(16 µin) maximum finish shall be pushed over the outer contact of connector. The force required to push this test ring on to the connector a minimum distance of 8 mm(0,315 in) shall not exceed 40 N.

b) For slotted outer contacts, a steel test ring (Figure 4) with inner diameter a of $18{,}23^{+0{,}02}_{0}$ mm($0{,}7177^{+0{,}0008}_{0}$ in) and a 0,4 µm (16 µin)max finish shall be placed over the outer contact of the connector. The test ring shall uniformly meet the outer contact when pushed no more than 3 mm (0,12 in) over this contact.

AVA Documents
Document Sharing Hub

The retention force for the gauge ring shall be 15 N min.

3.3 Dimensions – standard test connectors – Grade 0

In order to carry out the reflection coefficient measurement according to 9.2.1 of IEC 61169-1, the measure equipment should be provided with the standard test connector. The standard test connector with the tolerances specified in 3.3.1and 3.3.2 guarantee an accuracy of characteristic impendance of ±0,75 Ω.

3.3.1 Standard test connector with pin centre contact

The dimensions of the standard test connector with pin centre contact shall be as specified in 3.1.1, but with the tolerance given in Table 3:

Table 3 – Tolerance for the standard connector with pin centre contact.

Dimension	Millimetres		Inches	
	Minimum	Maximum	Minimum	Maximum
d	4,99	5,00	0,196 46	0,196 85
e	16,05	16,07	0,631 89	0,632 68
f	6,971	6,981	0,274 45	0,274 84
h	1,73	1,75	0,068 11	0,068 90

3.3.2 Standard test connector with socket centre contact

The dimensions of the standard test connector with socket centre contact shall be as specified in 3.1.2, but with the tolerance given in Table 4:

Table 4 – Tolerance for the standard connector with socket centre contact

Dimension	Millimetres		Inches	
	Minimum	Maximum	Minimum	Maximum
e	16,05	16,07	0,63189	0,63268
f	6,971	6,981	0,27445	0,27484
q	1,79	1,81	0,07047	0,07126

Additionally, dimensions of the slotted centre contact (Figure 5) shall be as follows:

Documents
Document Sharing Hub
Full document details: IEC 61169-4 2008

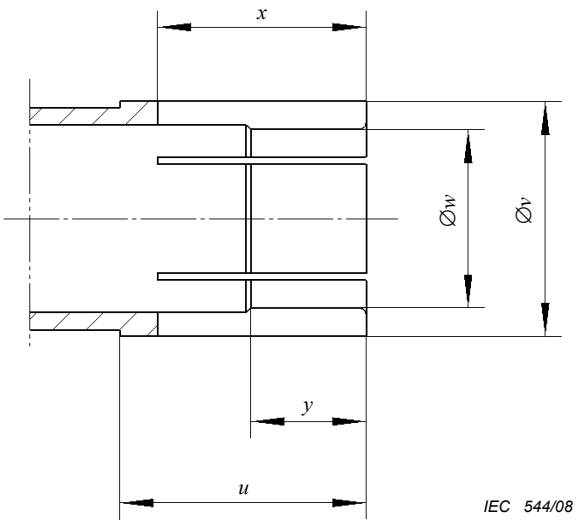

NOTE For dimensions see Table 5.

Figure 5 – Slotted centre contact

Table 5 – Slotted centre contact

Dimension	Millimetres		Inches		Note
	Minimum	Maximum	Minimum	Maximum	
u	7,2	7,4	0,2835	0,2913	
v	6,997	7,003	0,275473	0,275709	1
w	To fulfil requirements of dimension v				
x	6,9	7,1	0,2717	0,2795	2
y	1,2		0,0472		
NOTE 1 When pin gauge Ø 4,99 mm (0,19646 in) min. Ø 5,00 mm (0,19685 in) max. is inserted to 2 mm depth.					
NOTE 2 Six slots spaced 60° apart 0,3 mm (0,0118 in) wide.					

4 Quality assessment procedures

4.1 General

The following subclauses provide recommended ratings, performance and test conditions to be considered when writing a detail specification (DS). They also provide an appropriate schedule of tests with minimum levels of conformance

4.2 Ratings and characteristics

The values indicated below are recommended for type 7-16 connectors and are given for the writer of the detail specification .They are applicable for the condition when the connectors are fully mated .

Certain tests will usually not be required. When these tests are required appropriate values shall be entered in the detail specification at the discretion of the specification writer.

Documents
Document Sharing Hub
Full document details: IEC 61169-4 2008

The connectors have a maximum working voltage of 4 k V at sea level (350 V at 44 mbar/ 20 000 m altitude). Connection to the cable may be made either by crimping or soldering, depending upon design.

NOTE 2 All voltages specified in this standard are r.m.s. values of a.c. voltages. All test voltages are a.c. voltages of 50 Hz to 60 Hz.

NOTE 3 For details of symbols, abbreviations and procedures, see 7.3.2.

Table 6 – Preferred climatic categories (see IEC 60068-1):

Category	Designation letter*	Temperature range	Damp heat, steady state
40/85/21	A	–40 °C to +85 °C	21 days
55/155/56	B	–55 °C to +155 °C	56 days
* To be included in the IEC type designation (see Clause 3).			

Documents
Document Sharing Hub
Full document details: IEC 61169-4 2008

Table 7 – Ratings and characteristics

Ratings and characteristics	IEC 61169-1 subclause	Value	Remarks including any deviations from standard test methods
Electrical			
Nominal impedance		50 Ω	
Frequency range – Grade 2 connectors		Up to 7,5 GHz	
Reflection factor	9.2.1		
– straight styles [1]		≤ 0,1	
– right angle styles		As specified in the DS	
– component mounting styles		As specified in the DS	
– solder bucket and PCB mounting styles		As specified in the DS	
Centre contact resistance	9.2.3		
– initial		≤ 0,4 mΩ	
– after conditioning		≤ 0,8 mΩ	
Outer conductor continuity [1]	9.2.3		
– initial		≤ 1,5 mΩ	
– after conditioning		≤ 1,9 mΩ	
Insulation resistance [1]	9.2.5		
– initial		≥ 10 GΩ	
– after conditioning		≥ 100 MΩ	
Proof voltage at sea level [2, 3]	9.2.6	3000 V	
Proof voltage at 4,4 kPa [2, 3]	9.2.6	350 V	4,4 kPa approximately equivalent to 20 km
Screening effectiveness (straight cabled connectors only)	9.2.8	110 dB at 1 GHz	Z_t ≤ 0,02 mΩ applied torque 25 Nm
Discharge test (corona) – at sea level (cable 60096 IEC 50-3)	9.2.9	≥ 2 800 V	Extinction voltage
Intermodulation level	IEC 62037	Over -155 dBc	Test power 20 W
Mechanical			
Centre contact captivation – axial force – torque	9.3.5	200 N, 1 min Na	Maximum displacement 0,25 mm each direction
Engagement and separation force and torque, – axial force – torque	9.3.6	≤ 28 N < 30 Nm.	
Gauge retention force (resilient contacts) – centre – outer	9.3.4	>10 N <20 N >15 N < 45 N	Only for slotted contacts
Mechanical tests on cable fixing cable pulling, force minimum	9.3.7	500 N climatic category A 500 N climatic category B	
Cable bending	9.3.9	300 N climatic category A 150 N climatic category B	Bending number 10 Bending angle 90°
Cable torsion	9.3.10	5 Nm climatic category A 2,5 Nm climatic category B	

AVA Documents
Document Sharing Hub