IEC 61169-53

Edition 1.0 2015-09

INTERNATIONAL STANDARD

NORME INTERNATIONALE

colour inside

Radio-frequency connectors – Part 53: Sectional specification for RF coaxial connectors with inner diameter of outer conductor 16 mm with screw lock – Characteristic impedance 50 Ω (Type S7-16)

Connecteurs pour fréquences radioélectriques – Partie 53: Spécification intermédiaire relative aux connecteurs coaxiaux pour fréquences radioélectriques avec diamètre intérieur des conducteurs extérieurs de 16 mm à verrouillage à vis – Impédance caractéristique 50 Ω (Type S7-16)

IEC 61169-53:2015-09(en-fr)

AVA Documents
Document Sharing Hub
Full document details: IEC 61169-53 2015

THIS PUBLICATION IS COPYRIGHT PROTECTED

Copyright © 2015 IEC, Geneva, Switzerland

All rights reserved. Unless otherwise specified, no part of this publication may be reproduced or utilized in any form or by any means, electronic or mechanical, including photocopying and microfilm, without permission in writing from either IEC or IEC's member National Committee in the country of the requester. If you have any questions about IEC copyright or have an enquiry about obtaining additional rights to this publication, please contact the address below or your local IEC member National Committee for further information.

Droits de reproduction réservés. Sauf indication contraire, aucune partie de cette publication ne peut être reproduite ni utilisée sous quelque forme que ce soit et par aucun procédé, électronique ou mécanique, y compris la photocopie et les microfilms, sans l'accord écrit de l'IEC ou du Comité national de l'IEC du pays du demandeur. Si vous avez des questions sur le copyright de l'IEC ou si vous désirez obtenir des droits supplémentaires sur cette publication, utilisez les coordonnées ci-après ou contactez le Comité national de l'IEC de votre pays de résidence.

IEC Central Office
3, rue de Varembé
CH-1211 Geneva 20
Switzerland

Tel.: +41 22 919 02 11
Fax: +41 22 919 03 00
info@iec.ch
www.iec.ch

About the IEC
The International Electrotechnical Commission (IEC) is the leading global organization that prepares and publishes International Standards for all electrical, electronic and related technologies.

About IEC publications
The technical content of IEC publications is kept under constant review by the IEC. Please make sure that you have the latest edition, a corrigenda or an amendment might have been published.

IEC Catalogue - webstore.iec.ch/catalogue
The stand-alone application for consulting the entire bibliographical information on IEC International Standards, Technical Specifications, Technical Reports and other documents. Available for PC, Mac OS, Android Tablets and iPad.

IEC publications search - www.iec.ch/searchpub
The advanced search enables to find IEC publications by a variety of criteria (reference number, text, technical committee,…). It also gives information on projects, replaced and withdrawn publications.

IEC Just Published - webstore.iec.ch/justpublished
Stay up to date on all new IEC publications. Just Published details all new publications released. Available online and also once a month by email.

Electropedia - www.electropedia.org
The world's leading online dictionary of electronic and electrical terms containing more than 30 000 terms and definitions in English and French, with equivalent terms in 15 additional languages. Also known as the International Electrotechnical Vocabulary (IEV) online.

IEC Glossary - std.iec.ch/glossary
More than 60 000 electrotechnical terminology entries in English and French extracted from the Terms and Definitions clause of IEC publications issued since 2002. Some entries have been collected from earlier publications of IEC TC 37, 77, 86 and CISPR.

IEC Customer Service Centre - webstore.iec.ch/csc
If you wish to give us your feedback on this publication or need further assistance, please contact the Customer Service Centre: csc@iec.ch.

A propos de l'IEC
La Commission Electrotechnique Internationale (IEC) est la première organisation mondiale qui élabore et publie des Normes internationales pour tout ce qui a trait à l'électricité, à l'électronique et aux technologies apparentées.

A propos des publications IEC
Le contenu technique des publications IEC est constamment revu. Veuillez vous assurer que vous possédez l'édition la plus récente, un corrigendum ou amendement peut avoir été publié.

Catalogue IEC - webstore.iec.ch/catalogue
Application autonome pour consulter tous les renseignements bibliographiques sur les Normes internationales, Spécifications techniques, Rapports techniques et autres documents de l'IEC. Disponible pour PC, Mac OS, tablettes Android et iPad.

Recherche de publications IEC - www.iec.ch/searchpub

La recherche avancée permet de trouver des publications IEC en utilisant différents critères (numéro de référence, texte, comité d'études,…). Elle donne aussi des informations sur les projets et les publications remplacées ou retirées.

IEC Just Published - webstore.iec.ch/justpublished

Restez informé sur les nouvelles publications IEC. Just Published détaille les nouvelles publications parues. Disponible en ligne et aussi une fois par mois par email.

Electropedia - www.electropedia.org

Le premier dictionnaire en ligne de termes électroniques et électriques. Il contient plus de 30 000 termes et définitions en anglais et en français, ainsi que les termes équivalents dans 15 langues additionnelles. Egalement appelé Vocabulaire Electrotechnique International (IEV) en ligne.

Glossaire IEC - std.iec.ch/glossary
Plus de 60 000 entrées terminologiques électrotechniques, en anglais et en français, extraites des articles Termes et Définitions des publications IEC parues depuis 2002. Plus certaines entrées antérieures extraites des publications des CE 37, 77, 86 et CISPR de l'IEC.

Service Clients - webstore.iec.ch/csc

Si vous désirez nous donner des commentaires sur cette publication ou si vous avez des questions contactez-nous: csc@iec.ch.

Documents
Document Sharing Hub

Full document details: IEC 61169-53 2015

IEC 61169-53

Edition 1.0 2015-09

INTERNATIONAL STANDARD

NORME INTERNATIONALE

colour inside

Radio-frequency connectors –
Part 53: Sectional specification for RF coaxial connectors with inner diameter of outer conductor 16 mm with screw lock – Characteristic impedance 50 Ω (Type S7-16)

Connecteurs pour fréquences radioélectriques –
Partie 53: Spécification intermédiaire relative aux connecteurs coaxiaux pour fréquences radioélectriques avec diamètre intérieur des conducteurs extérieurs de 16 mm à verrouillage à vis – Impédance caractéristique 50 Ω (Type S7-16)

INTERNATIONAL
ELECTROTECHNICAL
COMMISSION

COMMISSION
ELECTROTECHNIQUE
INTERNATIONALE

ICS 33.120.30

ISBN 978-2-8322-2878-4

Warning! Make sure that you obtained this publication from an authorized distributor.
Attention! Veuillez vous assurer que vous avez obtenu cette publication via un distributeur agréé.

AVA Documents
Document Sharing Hub

® Registered trademark of the International Electrotechnical Commission
Marque déposée de la Commission Electrotechnique Internationale

Full document details: IEC 61169-53 2015

CONTENTS

FOREWORD 4
1 Scope 6
2 Normative references 6
3 Mating face and gauge information 6
3.1 Dimensions – General connectors – Grade 2 6
3.1.1 Connector with pin-centre contact 6
3.1.2 Connector with socket centre contact 7
3.2 Gauges 8
3.2.1 Gauge pin for socket-centre contact 8
3.2.2 Test procedure 9
3.3 Dimensions – Standard test connectors – Grade 0 9
3.3.1 Connector with pin-centre contact 9
3.3.2 Standard test connector with socket-centre contact 10
4 Quality assessment procedures 12
4.1 General 12
4.2 Ratings and characteristics (see Clause 5 of IEC 61169-1:2013) 12
4.3 Test schedule and inspection requirements 14
4.3.1 Acceptance tests 14
4.3.2 Periodic tests 14
4.4 Procedures for the quality conformance 15
4.4.1 Quality conformance inspection 15
4.4.2 Qualification approval and its maintenance 16
5 Instructions for preparation of detail specifications 16
5.1 General 16
5.2 Identification of the component 16
5.3 Performances 16
5.4 Marking, ordering information and related matters 16
5.5 Selection of tests, test conditions and severities 16
5.6 Blank detail specification pro-forma for type S7-16 connector 17
6 Marking 21
6.1 Marking of component 21
6.2 Marking and contents of package 21

Figure 1 – Connector with pin-centre contact (for dimensions, see Table 1) 7
Figure 2 – Connector with socket-centre contact (for dimensions, see Table 2) 8
Figure 3 – Gauge pin for socket-centre contact (for dimensions, see Table 3) 9
Figure 4 – Connector with pin-centre contact (for dimensions, see Table 4) 10
Figure 5 – Connector with socket-centre contact (for dimensions, see Table 5) 11

Table 1 – Dimensions of connector with pin-centre contact 7
Table 2 – Dimensions of connector with socket centre contact 8
Table 3 – Dimensions of gauge pin for socket-centre contact 9
Table 4 – Dimensions of connector with pin-centre contact 10
Table 5 – Dimensions of connector with socket-centre contact 11

AVA Documents
Document Sharing Hub

Full document details: IEC 61169-53 2015

Table 6 – Rating and characteristics 12
Table 7 – Acceptance tests 14
Table 8 – Periodic tests 15

Documents
Document Sharing Hub

Full document details: IEC 61169-53 2015

INTERNATIONAL ELECTROTECHNICAL COMMISSION

RADIO-FREQUENCY CONNECTORS –

Part 53: Sectional specification for RF coaxial connectors with inner diameter of outer conductor 16 mm with screw lock – Characteristic impedance 50 Ω (Type S7-16)

FOREWORD

1) The International Electrotechnical Commission (IEC) is a worldwide organization for standardization comprising all national electrotechnical committees (IEC National Committees). The object of IEC is to promote international co-operation on all questions concerning standardization in the electrical and electronic fields. To this end and in addition to other activities, IEC publishes International Standards, Technical Specifications, Technical Reports, Publicly Available Specifications (PAS) and Guides (hereafter referred to as "IEC Publication(s)"). Their preparation is entrusted to technical committees; any IEC National Committee interested in the subject dealt with may participate in this preparatory work. International, governmental and non-governmental organizations liaising with the IEC also participate in this preparation. IEC collaborates closely with the International Organization for Standardization (ISO) in accordance with conditions determined by agreement between the two organizations.
2) The formal decisions or agreements of IEC on technical matters express, as nearly as possible, an international consensus of opinion on the relevant subjects since each technical committee has representation from all interested IEC National Committees.
3) IEC Publications have the form of recommendations for international use and are accepted by IEC National Committees in that sense. While all reasonable efforts are made to ensure that the technical content of IEC Publications is accurate, IEC cannot be held responsible for the way in which they are used or for any misinterpretation by any end user.
4) In order to promote international uniformity, IEC National Committees undertake to apply IEC Publications transparently to the maximum extent possible in their national and regional publications. Any divergence between any IEC Publication and the corresponding national or regional publication shall be clearly indicated in the latter.
5) IEC itself does not provide any attestation of conformity. Independent certification bodies provide conformity assessment services and, in some areas, access to IEC marks of conformity. IEC is not responsible for any services carried out by independent certification bodies.
6) All users should ensure that they have the latest edition of this publication.
7) No liability shall attach to IEC or its directors, employees, servants or agents including individual experts and members of its technical committees and IEC National Committees for any personal injury, property damage or other damage of any nature whatsoever, whether direct or indirect, or for costs (including legal fees) and expenses arising out of the publication, use of, or reliance upon, this IEC Publication or any other IEC Publications.
8) Attention is drawn to the Normative references cited in this publication. Use of the referenced publications is indispensable for the correct application of this publication.
9) Attention is drawn to the possibility that some of the elements of this IEC Publication may be the subject of patent rights. IEC shall not be held responsible for identifying any or all such patent rights.

International Standard IEC 61169-53 has been prepared by subcommittee 46F: RF and microwave passive components, of IEC technical committee 46: Cables, wires, waveguides, R.F. connectors, R.F. and microwave passive components and accessories.

The text of this standard is based on the following documents:

FDIS	Report on voting
46F/309/CDV	46F/321/RVC

Full information on the voting for the approval of this standard can be found in the report on voting indicated in the above table.

This publication has been drafted in accordance with the ISO/IEC Directives, Part 2.

Documents
Document Sharing Hub

Full document details: IEC 61169-53 2015

A list of all parts of the IEC 61169 series, under the general title: *Radio-frequency connectors*, can be found on the IEC website.

The committee has decided that the contents of this publication will remain unchanged until the stability date indicated on the IEC website under "http://webstore.iec.ch" in the data related to the specific publication. At this date, the publication will be

- reconfirmed,
- withdrawn,
- replaced by a revised edition, or
- amended.

IMPORTANT – The 'colour inside' logo on the cover page of this publication indicates that it contains colours which are considered to be useful for the correct understanding of its contents. Users should therefore print this document using a colour printer.

Documents
Document Sharing Hub

Full document details: IEC 61169-53 2015

RADIO-FREQUENCY CONNECTORS –

Part 53: Sectional specification for RF coaxial connectors with inner diameter of outer conductor 16 mm with screw lock – Characteristic impedance 50 Ω (Type S7-16)

1 Scope

This part of IEC 61169, which is a sectional specification (SS), provides information and rules for the preparation of detail specifications (DS) for RF coaxial connectors with threaded coupling, typically for use in 50 Ω cable networks (Type S7-16).

It prescribes mating face dimensions for general purpose connectors – grade 2, dimensional details of standard test connectors-grade 0, gauging information and tests selected from IEC 61169-1, applicable to all detail specifications relating to series 4.1-9.5 RF connectors.

This specification indicates recommended performance characteristics to be considered when writing a detail specification and it covers test schedules and inspection requirements for assessment levels M and H.

The S7-16 series RF coaxial connectors with nominal impedance 50 Ω are threaded coupling units which are used with all kinds of RF cables and microstrips in microwave transmission system. And the working frequency is up to 7,5 GHz.

NOTE Metric dimension are original dimensions. All undimensioned pictorial configurations are for reference purpose only.

2 Normative references

The following documents, in whole or in part, are normatively referenced in this document and are indispensable for its application. For dated references, only the edition cited applies. For undated references, the latest edition of the referenced document (including any amendments) applies.

IEC 61169-1:2013, *Radio frequency connectors – Part 1: Generic specification – General requirements and measuring methods*

IEC 62037-3 (all parts), *Passive RF and microwave devices, intermodulation level measurement*

3 Mating face and gauge information

3.1 Dimensions – General connectors – Grade 2

3.1.1 Connector with pin-centre contact

The mating face of connector with pin-centre contact is shown in Figure 1 and its dimensions are shown in Table 1.

Documents
Document Sharing Hub
Full document details: IEC 61169-53 2015

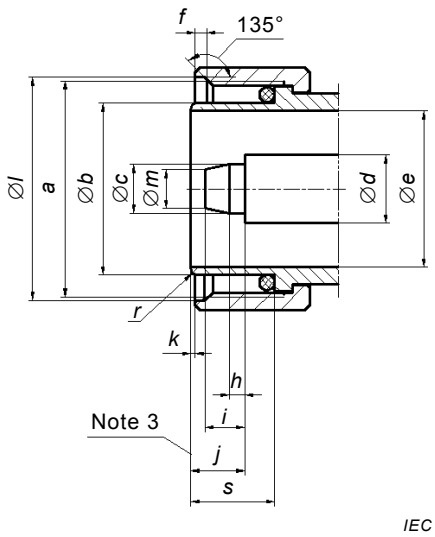

[1] The tolerance on this dimension is determined by the tolerance of characteristic impedance.

[2] The design of this dimension should meet sealing performance at the same time the electrical requirements.

[3] Mechanical and electrical reference plane

Figure 1 – Connector with pin-centre contact (for dimensions, see Table 1)

Table 1 – Dimensions of connector with pin-centre contact

Reference	mm		Additional notes
	Min.	Max.	
a	M22×1		
b	17,87	18,03	
c	4,80	4,86	
d	7 (nominal)		1
e	16,02	°16,08	
f	1,00	1,50	
h	1,80	2,20	
i	4,20	4,50	
j	5,20	5,50	
s	7,80	–	2
k	0,00	1,00	
l	22,05	22,35	
m	–	3,70	
r	0,12	0,30	

3.1.2 Connector with socket centre contact

The mating face of connector with socket centre contact is shown in Figure 2 and its dimensions are shown in Table 2.

Documents
Document Sharing Hub
Full document details: IEC 61169-53 2015

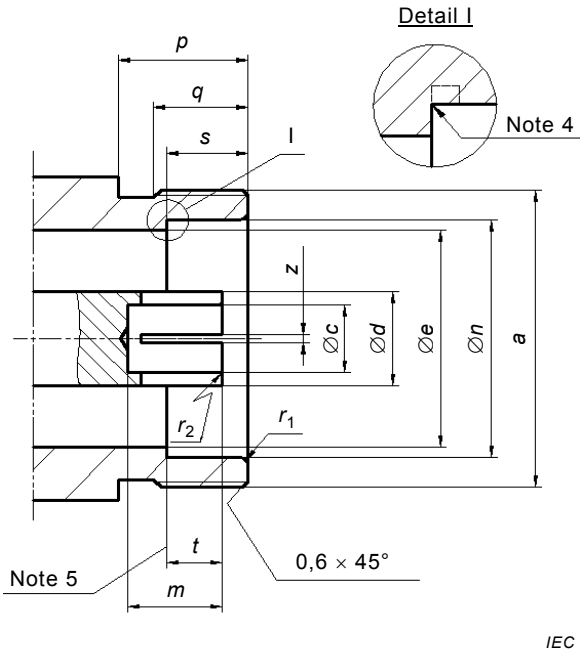

1 The design of this dimension should meet gauge test of 3.2.1 and reflection factor requirement.

2 The tolerance on this dimension is determined by the tolerance of characteristic impedance.

3 Slot design optional. Contact to be closed to meet electrical and mechanical request..

4 Root cut.

5 Mechanical and electrical reference plane

Figure 2 – Connector with socket-centre contact (for dimensions, see Table 2)

Table 2 – Dimensions of connector with socket centre contact

Reference	mm		Additional notes
	Min.	Max.	
a	M22×1		
c	–	–	1
d	7 (nominal)		2
e	16,02	16,08	
n	18,05	18,13	
p	9,50	–	
q	7,50	–	
s	6,70	7,00	
t	4,90	5,20	
m	5,00	–	
z	–	–	3
r_1	0,20	0,35	
r_2	0,20	0,35	

3.2 Gauges

3.2.1 Gauge pin for socket-centre contact

The gauge pin for socket-centre contact is shown in Figure 3 and its dimensions are shown in Table 3.

Documents
Document Sharing Hub
Full document details: IEC 61169-53 2015

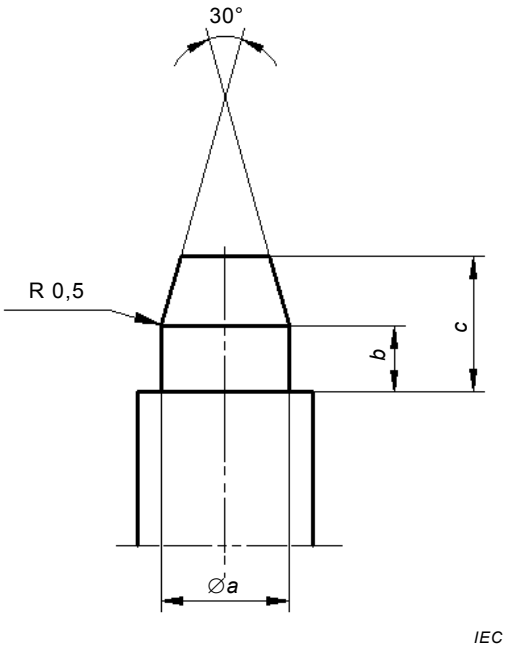

Figure 3 – Gauge pin for socket-centre contact (for dimensions, see Table 3)

Table 3 – Dimensions of gauge pin for socket-centre contact

Ref.	Gauge A (For sizing purpose)		Gauge B (For measurement of retention force) Mass of gauge : 1 000 $^{+5}_{0}$ g	
	mm		mm	
	Min.	Max.	Min.	Max.
a	4,91	4,92	4,81	4,82
b	2,00	3,00	2,00	3,00
c	4,50	5,00	4,50	5,00
Material: steel, 0,4 µm maximum finish.				

3.2.2 Test procedure

a) Sizing test

The gauge A shall be inserted into the centre contact for three times with a minimum distance of 2 mm. This is a sizing operation.

b) Withdrawal test

After sizing, the gauge B shall be inserted into socket centre contact. The force to withdraw gauge B shall be 10 N to 20 N.

3.3 Dimensions – Standard test connectors – Grade 0

3.3.1 Connector with pin-centre contact

Interface of connector with pin-centre contact is shown in Figure 4, dimensions are shown in Table 4.

NOTE The standard test connector with the tolerances specified in 3.3.1and 3.3.2 guarantees an accuracy of characteristic impedance of ±0,075 Ω. It is used to carry out the reflection coefficient measurement according to 9.2.1 of IEC 61169-1:2013.

Documents
Document Sharing Hub
Full document details: IEC 61169-53 2015

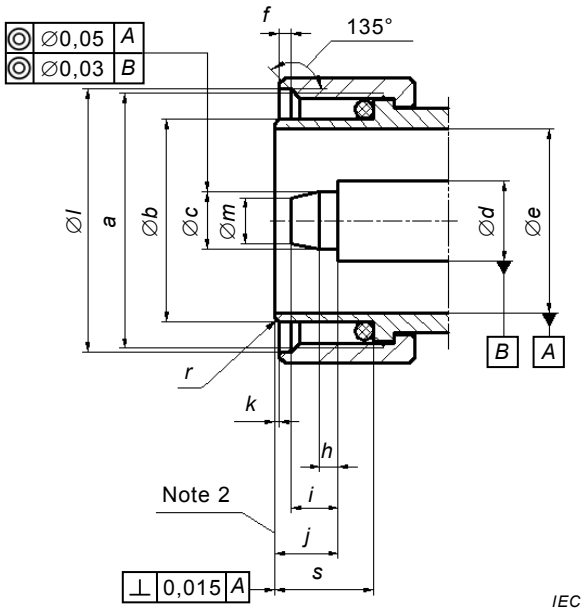

[1] The design of this dimension and sealing performance at the same time meet the electrical requirements.

[2] Mechanical and electrical reference plane.

Figure 4 – Connector with pin-centre contact (for dimensions, see Table 4)

Table 4 – Dimensions of connector with pin-centre contact

Reference	mm		Additional notes
	Min.	Max.	
a	M22×1		
b	17,870	18,030	
c	4,800	4,860	
d	6,971	6,981	
e	16,050	16,070	
f	1,000	1,500	
h	1,800	2,200	
i	4,200	4,500	
j	5,200	5,230	
s	7,800	–	1
k	0,000	1,000	
l	22,050	22,350	
m	–	3,500	
r	0,120	0,300	

3.3.2 Standard test connector with socket-centre contact

The mating face of standard test connector with socket-centre contact is shown in Figure 5 and its dimensions are shown in Table 5.

Documents
Document Sharing Hub
Full document details: IEC 61169-53 2015

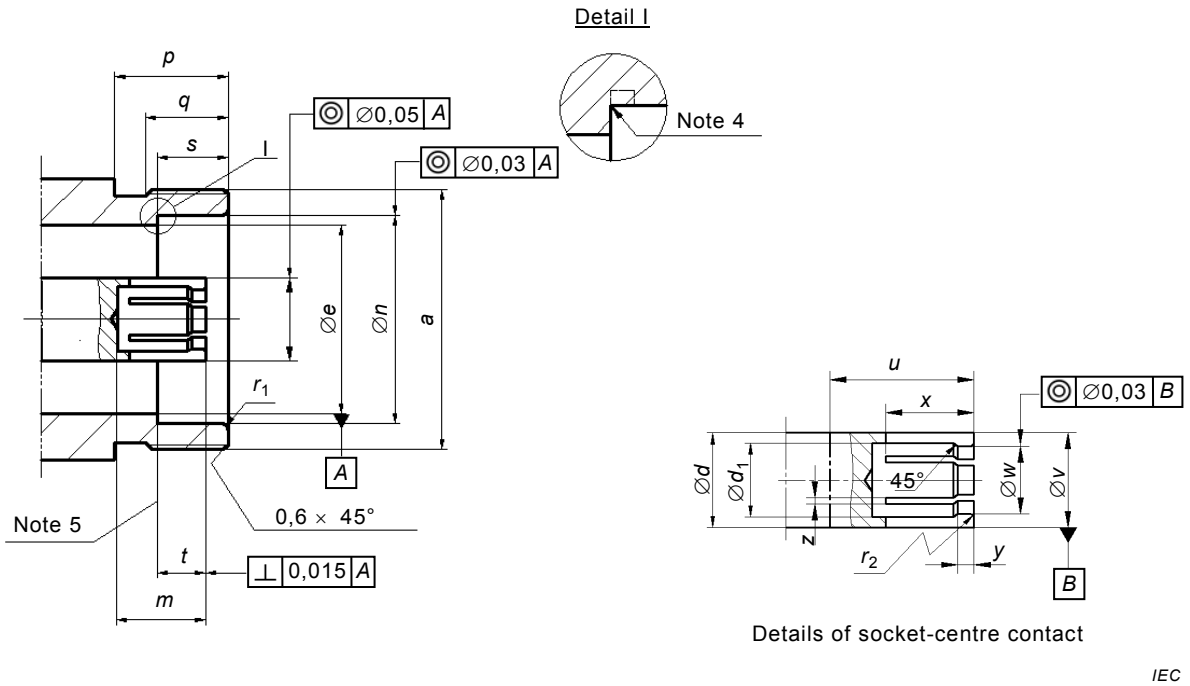

1 When pin gauge Ø 4,850 mm min. Ø 4,860 mm max. is inserted to 2 mm depth.

2 The design of this dimension should meet requirement of dimension "*v*"'.

3 Slot design optional. Contact to be closed to meet electrical and mechanical request.

4 Root cut.

5 Mechanical and electrical reference plane.

Figure 5 – Connector with socket-centre contact (for dimensions, see Table 5)

Table 5 – Dimensions of connector with socket-centre contact

Reference	mm		Notes
	Min.	Max.	
a	M22×1		
d	6,971	6,981	
*d*1	5,000	5,500	
e	16,050	16,070	
n	18,080	18,100	
p	9,500	–	
q	7,500	–	
s	6,700	7,000	
t	5,170	5,200	
m	5,000	–	
u	7,200	7,400	
v	6,997	7,003	1
w	–	–	2
z	0,200	0,300	3
r_1	0,20	0,35	
r_2	0,20	0,35	

AVA Documents Document Sharing Hub
Full document details: IEC 61169-53 2015

4 Quality assessment procedures

4.1 General

Subclauses 4.1 to 4.4 provide recommended ratings, performance and test conditions to be considered when writing a detail specification (DS). They also provide an appropriate schedule of tests with minimum levels of conformance inspection sampling, together with the pro forma blank detail specification (BDS) and instructions for the preparation of a detail specification.

4.2 Ratings and characteristics (see Clause 5 of IEC 61169-1:2013)

The values indicated below are recommended for S7-16 series RF connectors and are given for the writer of the detail specification. They are applicable for the condition when the connectors are fully mated.

Certain tests will usually not be required. When these tests are required, appropriate values shall be entered in the detail specification at the discretion of the specification writer.

Rating and characteristics are given in Table 6.

Table 6 – Rating and characteristics

Ratings and characteristics	Test method IEC 61169-1:2013 Subclause	Value	Remarks, deviation from standard test method
Electrical			
Nominal impedance		50 Ω	
Frequency range		DC to 7,5 GHz	
Return loss [a]	9.2.1		For interface only
Straight styles		≥20 dB (DC to 7,5 GHZ)	
Right angle styles		See DS	
For flexible cable		See DS	
Component mounting style		See DS	
Solder bucket and PCB mounting style		See DS	
Insertion loss		Na	
Power rating[a]	9.2.2	500 W at 2 GHz	25 °C VSWR = 1 at sea level 2GHz peak power 5 KW Duty ratio 10 %
Centre contact resistance [b]	9.2.3		
initial		< 0,4 mΩ	
after tests		< 0,8 mΩ	
Outer contact continuity [b]	9.2.3		
initial		≤ 1,5 mΩ	
after tests		≤ 1,9 mΩ	
Insulation resistance	9.2.5		
initial		≥ 10 GΩ	
after conditioning		≥ 100 MΩ	
Proof voltage [c, d]			
Sea level	9.2.6	3 000 Vrms	
At 4,4 Kpa		350 Vrms	
Screening effectiveness [e]	9.2.7		

AVA Documents Document Sharing Hub

Full document details: IEC 61169-53 2015

Ratings and characteristics	Test method IEC 61169-1:2013 Subclause	Value	Remarks, deviation from standard test method
0,5 GHz to 1 GHz		>110 dB at 1 GHz	Applied torque 25 Nm Zt = 0,02 mΩ
Intermodulation level	IEC 62037	–155 dBc	Testing power 20 W
Discharge test (Corona effect) at sea level	9.2.8	2 800 V	
Mechanical			
Gauge retention force (resilient contact)	9.3.4		
Centre contact		10 N to 20 N	
Outer contact		Na	
Centre contact captivation [f]	9.3.5		
axial force		≥ 200 N	
torque		See DS	
Engagement and separation axial force			
engagement		≤ 28 N	Typical
separation		≤ 28 N	Typical
Coupling moment Coupling nut friction Coupling torque Proof torque		≤ 30 Nm	
Effectiveness of cable fixing against			
– cable rotation	9.3.7	See DS	
– cable pulling	9.3.8	See DS	
		See DS	
– cable bending	9.3.9	300 N climatic category A	Bending number 10 Bending angle 90°
		150 N climatic category B	
– cable torsion	9.3.10	5 Nm climatic category A 2,5 Nm climatic category B	
Tensile strength of coupling mechanism	9.3.11	≥ 445 N	
Bump	9.3.13	See DS	
Vibration	9.3.3	1 000 m/s^2 (10 Hz to 500 Hz)	10 g acceleration
Shock	9.3.14	500 m/s^2 1/2sine wave 11 ms	50 g acceleration
Endurance			
Mechanical endurance	9.3.15	500 operations	
High temperature endurance [g]	9.4.5	1 000 h at 125 °C	
Environmental			
Climatic category		40/85/21	A
		55/125/21	B
Salt mist	9.4.10	48 h spray	

AVA Documents
Document Sharing Hub
Full document details: IEC 61169-53 2015