IEC 61169-54

Edition 2.0 2021-08

INTERNATIONAL STANDARD

NORME INTERNATIONALE

Radio-frequency connectors – Part 54: Sectional specification for coaxial connectors with 10 mm inner diameter of outer conductor, nominal characteristic impedance 50 Ω, series 4,3-10

Connecteurs pour fréquences radioélectriques – Partie 54: Spécification intermédiaire relative aux connecteurs coaxiaux avec diamètre intérieur du conducteur extérieur de 10 mm, impédance caractéristique nominale 50 Ω, série 4,3-10

IEC 61169-54:2021-08(en-fr)

Documents
Document Sharing Hub
Full document details: IEC 61169-54-2021

THIS PUBLICATION IS COPYRIGHT PROTECTED
Copyright © 2021 IEC, Geneva, Switzerland

All rights reserved. Unless otherwise specified, no part of this publication may be reproduced or utilized in any form or by any means, electronic or mechanical, including photocopying and microfilm, without permission in writing from either IEC or IEC's member National Committee in the country of the requester. If you have any questions about IEC copyright or have an enquiry about obtaining additional rights to this publication, please contact the address below or your local IEC member National Committee for further information.

Droits de reproduction réservés. Sauf indication contraire, aucune partie de cette publication ne peut être reproduite ni utilisée sous quelque forme que ce soit et par aucun procédé, électronique ou mécanique, y compris la photocopie et les microfilms, sans l'accord écrit de l'IEC ou du Comité national de l'IEC du pays du demandeur. Si vous avez des questions sur le copyright de l'IEC ou si vous désirez obtenir des droits supplémentaires sur cette publication, utilisez les coordonnées ci-après ou contactez le Comité national de l'IEC de votre pays de résidence.

IEC Central Office
3, rue de Varembé
CH-1211 Geneva 20
Switzerland

Tel.: +41 22 919 02 11
info@iec.ch
www.iec.ch

About the IEC
The International Electrotechnical Commission (IEC) is the leading global organization that prepares and publishes International Standards for all electrical, electronic and related technologies.

About IEC publications
The technical content of IEC publications is kept under constant review by the IEC. Please make sure that you have the latest edition, a corrigendum or an amendment might have been published.

IEC publications search - webstore.iec.ch/advsearchform
The advanced search enables to find IEC publications by a variety of criteria (reference number, text, technical committee, …). It also gives information on projects, replaced and withdrawn publications.

IEC Just Published - webstore.iec.ch/justpublished
Stay up to date on all new IEC publications. Just Published details all new publications released. Available online and once a month by email.

IEC Customer Service Centre - webstore.iec.ch/csc
If you wish to give us your feedback on this publication or need further assistance, please contact the Customer Service Centre: sales@iec.ch.

IEC online collection - oc.iec.ch
Discover our powerful search engine and read freely all the publications previews. With a subscription you will always have access to up to date content tailored to your needs.

Electropedia - www.electropedia.org
The world's leading online dictionary on electrotechnology, containing more than 22 000 terminological entries in English and French, with equivalent terms in 18 additional languages. Also known as the International Electrotechnical Vocabulary (IEV) online.

A propos de l'IEC
La Commission Electrotechnique Internationale (IEC) est la première organisation mondiale qui élabore et publie des Normes internationales pour tout ce qui a trait à l'électricité, à l'électronique et aux technologies apparentées.

A propos des publications IEC
Le contenu technique des publications IEC est constamment revu. Veuillez vous assurer que vous possédez l'édition la plus récente, un corrigendum ou amendement peut avoir été publié.

Recherche de publications IEC - webstore.iec.ch/advsearchform
La recherche avancée permet de trouver des publications IEC en utilisant différents critères (numéro de référence, texte, comité d'études, …). Elle donne aussi des informations sur les projets et les publications remplacées ou retirées.

IEC Just Published - webstore.iec.ch/justpublished
Restez informé sur les nouvelles publications IEC. Just Published détaille les nouvelles publications parues. Disponible en ligne et une fois par mois par email.

Service Clients - webstore.iec.ch/csc
Si vous désirez nous donner des commentaires sur cette publication ou si vous avez des questions contactez-nous: sales@iec.ch.

IEC online collection - oc.iec.ch
Découvrez notre puissant moteur de recherche et consultez gratuitement tous les aperçus des publications. Avec un abonnement, vous aurez toujours accès à un contenu à jour adapté à vos besoins.

Electropedia - www.electropedia.org
Le premier dictionnaire d'électrotechnologie en ligne au monde, avec plus de 22 000 articles terminologiques en anglais et en français, ainsi que les termes équivalents dans 16 langues additionnelles. Egalement appelé Vocabulaire Electrotechnique International (IEV) en ligne.

Documents
Document Sharing Hub

Full document details: IEC 61169-54-2021

IEC 61169-54

Edition 2.0 2021-08

INTERNATIONAL STANDARD

NORME INTERNATIONALE

Radio-frequency connectors – Part 54: Sectional specification for coaxial connectors with 10 mm inner diameter of outer conductor, nominal characteristic impedance 50 Ω, series 4,3-10

Connecteurs pour fréquences radioélectriques – Partie 54: Spécification intermédiaire relative aux connecteurs coaxiaux avec diamètre intérieur du conducteur extérieur de 10 mm, impédance caractéristique nominale 50 Ω, série 4,3-10

INTERNATIONAL
ELECTROTECHNICAL
COMMISSION

COMMISSION
ELECTROTECHNIQUE
INTERNATIONALE

ICS 33.120.30

ISBN 978-2-8322-1014-5

Warning! Make sure that you obtained this publication from an authorized distributor.
Attention! Veuillez vous assurer que vous avez obtenu cette publication via un distributeur agréé.

AVA Documents
Document Sharing Hub

® Registered trademark of the International Electrotechnical Commission
Marque déposée de la Commission Electrotechnique Internationale

Full document details: IEC 61169-54-2021

CONTENTS

FOREWORD....4
INTRODUCTION....6
1 Scope....7
2 Normative references....7
3 Terms and definitions....7
4 Mating face and gauge information....7
4.1 Dimensions – General connectors – Grade 2....7
4.1.1 Connector with pin-centre contact (see Figure 1)....7
4.1.2 Connector with socket-centre contact (see Figure 2)....10
4.1.3 Presentation of possible coupling mechanisms....12
4.2 Gauges....15
4.2.1 Gauge pins for socket-centre contact (see Figure 6)....15
4.2.2 Test procedure....15
4.2.3 Gauge rings for plug outer contact (see Figure 7)....16
4.2.4 Test procedure....16
4.3 Dimensions – Standard test connectors – Grade 0....17
4.3.1 Connector with pin-centre contact (see Figure 8)....17
4.3.2 Connector with socket-centre contact (see Figure 9)....19
5 Quality assessment procedure....20
5.1 General....20
5.2 Ratings and characteristics....21
5.3 Test schedule and inspection requirements....23
5.3.1 Acceptance tests....23
5.3.2 Periodic tests....24
5.4 Procedures for quality conformance....25
5.4.1 Quality conformance inspection....25
5.4.2 Quality conformance and its maintenance....26
5.5 Test and measurement procedures....26
5.5.1 General....26
5.5.2 Schedule of basic test groupings for acceptance and periodic tests....26
5.6 Specifications....27
5.6.1 Specification structures....27
5.6.2 Sectional specification (SS)....27
5.6.3 Detail specification (DS)....27
5.6.4 Blank detail specification....27
5.6.5 Blank detail specification pro-forma for 50 Ω type 4,3-10 connectors....29
6 Marking....33
6.1 Marking of component....33
6.2 Marking and contents of package....34

Figure 1 – Connector with pin-centre contact (for dimensions and key, see Table 1)....8
Figure 2 – Connector with socket-centre contact (for dimensions and key, see Table 2)....10
Figure 3 – Screw type....12
Figure 4 – Hand screw type....13
Figure 5 – Quick lock type....14

AVA Documents
Document Sharing Hub
Full document details: IEC 61169-54-2021

Figure 6 – Gauge pins for socket-centre contact (for dimensions, see Table 3).....15
Figure 7 – Gauge rings for socket outer contact (for dimensions see Table 4) 16
Figure 8 – Connector with pin-centre contact (for dimensions and key, see Table 5).....17
Figure 9 – Connector with socket-centre contact (for dimensions and key, see Table 6) 19

Table 1 – Dimensions of connector with pin-centre contact 9
Table 2 – Dimensions of connector with socket-centre contact.....11
Table 3 – Dimensions of gauge pins for socket-centre contact 15
Table 4 – Dimensions of gauge rings for socket outer contact.....16
Table 5 – Dimensions of connector with pin-centre contact 18
Table 6 – Dimensions of connector with socket-centre contact.....20
Table 7 – Climatic categories 21
Table 8 – Ratings and characteristics.....21
Table 9 – Acceptance tests 24
Table 10 – Periodic tests 25

Documents
Document Sharing Hub

Full document details: IEC 61169-54-2021

INTERNATIONAL ELECTROTECHNICAL COMMISSION

RADIO-FREQUENCY CONNECTORS –

Part 54: Sectional specification for coaxial connectors with 10 mm inner diameter of outer conductor, nominal characteristic impedance 50 Ω, series 4,3-10

FOREWORD

1) The International Electrotechnical Commission (IEC) is a worldwide organization for standardization comprising all national electrotechnical committees (IEC National Committees). The object of IEC is to promote international co-operation on all questions concerning standardization in the electrical and electronic fields. To this end and in addition to other activities, IEC publishes International Standards, Technical Specifications, Technical Reports, Publicly Available Specifications (PAS) and Guides (hereafter referred to as "IEC Publication(s)"). Their preparation is entrusted to technical committees; any IEC National Committee interested in the subject dealt with may participate in this preparatory work. International, governmental and non-governmental organizations liaising with the IEC also participate in this preparation. IEC collaborates closely with the International Organization for Standardization (ISO) in accordance with conditions determined by agreement between the two organizations.
2) The formal decisions or agreements of IEC on technical matters express, as nearly as possible, an international consensus of opinion on the relevant subjects since each technical committee has representation from all interested IEC National Committees.
3) IEC Publications have the form of recommendations for international use and are accepted by IEC National Committees in that sense. While all reasonable efforts are made to ensure that the technical content of IEC Publications is accurate, IEC cannot be held responsible for the way in which they are used or for any misinterpretation by any end user.
4) In order to promote international uniformity, IEC National Committees undertake to apply IEC Publications transparently to the maximum extent possible in their national and regional publications. Any divergence between any IEC Publication and the corresponding national or regional publication shall be clearly indicated in the latter.
5) IEC itself does not provide any attestation of conformity. Independent certification bodies provide conformity assessment services and, in some areas, access to IEC marks of conformity. IEC is not responsible for any services carried out by independent certification bodies.
6) All users should ensure that they have the latest edition of this publication.
7) No liability shall attach to IEC or its directors, employees, servants or agents including individual experts and members of its technical committees and IEC National Committees for any personal injury, property damage or other damage of any nature whatsoever, whether direct or indirect, or for costs (including legal fees) and expenses arising out of the publication, use of, or reliance upon, this IEC Publication or any other IEC Publications.
8) Attention is drawn to the Normative references cited in this publication. Use of the referenced publications is indispensable for the correct application of this publication.
9) Attention is drawn to the possibility that some of the elements of this IEC Publication may be the subject of patent rights. IEC shall not be held responsible for identifying any or all such patent rights.

IEC 61169-54 has been prepared by subcommittee 46F: RF and microwave passive components, of IEC technical committee 46: Cables, wires, waveguides, RF connectors, RF and microwave passive components and accessories. It is an International Standard.

This second edition cancels and replaces the first edition published in 2016. This edition constitutes a technical revision.

This edition includes the following significant technical changes with respect to the previous edition:

a) updated patent statement,
b) Table 8: some values changed.

Documents
Document Sharing Hub

Full document details: IEC 61169-54-2021

The text of this International Standard is based on the following documents:

FDIS	Report on voting
46F/574/FDIS	46F/577/RVD

Full information on the voting for its approval can be found in the report on voting indicated in the above table.

The language used for the development of this International Standard is English.

This document was drafted in accordance with ISO/IEC Directives, Part 2, and developed in accordance with ISO/IEC Directives, Part 1 and ISO/IEC Directives, IEC Supplement, available at www.iec.ch/members_experts/refdocs. The main document types developed by IEC are described in greater detail at www.iec.ch/standardsdev/publications.

A list of all parts of the IEC 61169 series, under the general title: *Radio-frequency connectors*, can be found on the IEC website.

The committee has decided that the contents of this document will remain unchanged until the stability date indicated on the IEC website under "http://webstore.iec.ch" in the data related to the specific document. At this date, the document will be

- reconfirmed,
- withdrawn,
- replaced by a revised edition, or
- amended.

Documents
Document Sharing Hub

Full document details: IEC 61169-54-2021

INTRODUCTION

The International Electrotechnical Commission (IEC) draws attention to the fact that it is claimed that compliance with this document may involve the use of a patent. IEC takes no position concerning the evidence, validity, and scope of this patent right.

The holder of this patent right has assured IEC that s/he is willing to negotiate licences under reasonable and non-discriminatory terms and conditions with applicants throughout the world. In this respect, the statement of the holder of this patent right is registered with IEC. Information may be obtained from the patent database available at http://patents.iec.ch.

Attention is drawn to the possibility that some of the elements of this document may be the subject of patent rights other than those in the patent database. IEC shall not be held responsible for identifying any or all such patent rights.

Documents
Document Sharing Hub

Full document details: IEC 61169-54-2021

RADIO-FREQUENCY CONNECTORS –

Part 54: Sectional specification for coaxial connectors with 10 mm inner diameter of outer conductor, nominal characteristic impedance 50 Ω, series 4,3-10

1 Scope

This part of IEC 61169, which is a sectional specification (SS), provides information and rules for the preparation of detail specifications (DS) for coaxial connectors with 10 mm inner diameter of outer conductor, characteristic impedance 50 Ω, series 4,3-10 with screw type, hand screw type or quick-lock type coupling, for an upper operating frequency limit of 6 GHz, for use in wireless telecommunication and wireless network applications in conjunction with appropriate transmission line types for these applications.

It also describes mating face dimensions for general purpose connectors, gauging information and tests selected from IEC 61169-1, applicable to all detail specifications relating to 4,3-10 series connectors.

This specification indicates the recommended performance characteristics to be considered when writing a detail specification and it covers test schedules and inspection requirements for assessment levels M and H.

2 Normative references

The following documents are referred to in the text in such a way that some or all of their content constitutes requirements of this document. For dated references, only the edition cited applies. For undated references, the latest edition of the referenced document (including any amendments) applies.

IEC 61169-1:2013, *Radio-frequency connectors – Part 1: Generic specification – General requirements and measuring methods*

IEC 62037-1:2012, *Passive RF and microwave devices, intermodulation level measurement – Part 1: General requirements and measuring methods*

3 Terms and definitions

No terms and definitions are listed in this document.

4 Mating face and gauge information

4.1 Dimensions – General connectors – Grade 2

4.1.1 Connector with pin-centre contact (see Figure 1)

Metric dimensions are original dimensions. All un-dimensioned pictorial configurations are for reference purpose only.

Documents
Document Sharing Hub

Full document details: IEC 61169-54-2021

Dimensions in millimetres

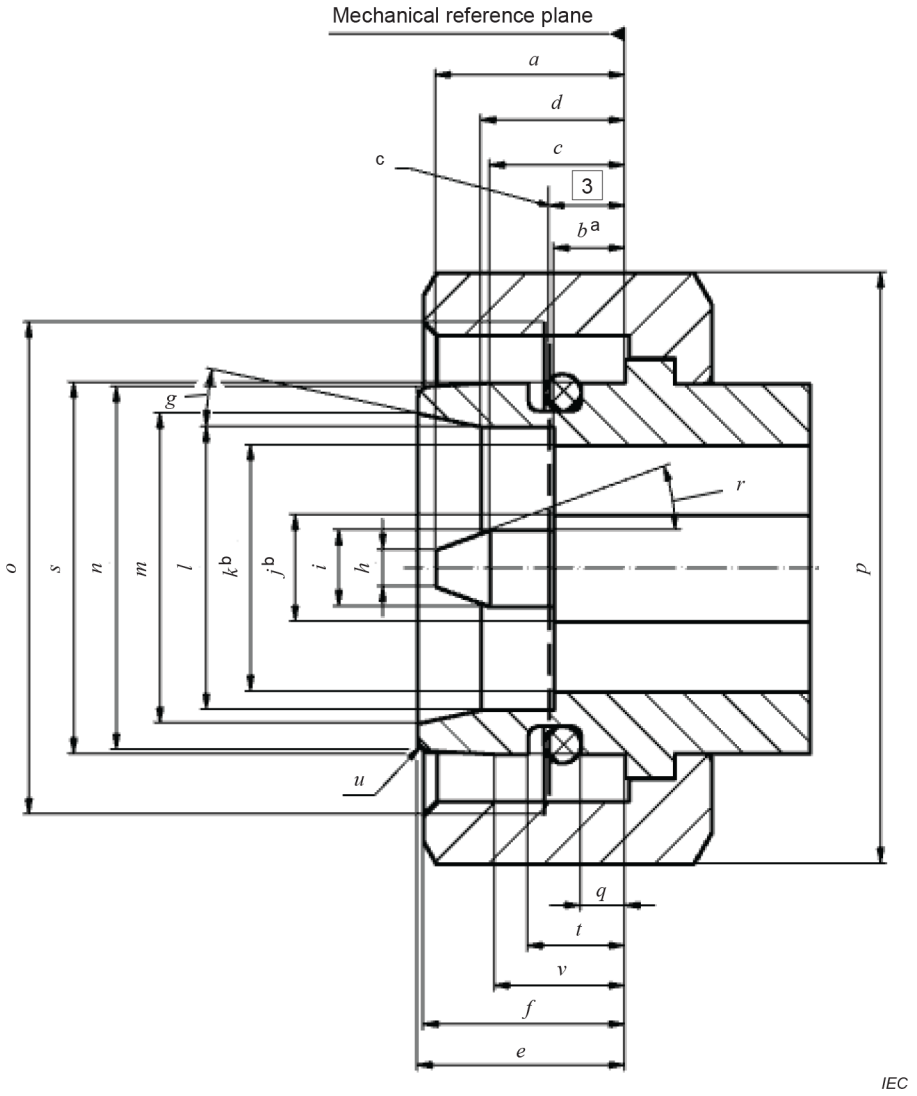

Figure 1 – Connector with pin-centre contact (for dimensions and key, see Table 1)

Documents
Document Sharing Hub
Full document details: IEC 61169-54-2021

Table 1 – Dimensions of connector with pin-centre contact

Ref.	mm		Additional notes
	Min.	Max.	
a	–	8,0	
b	–	2,9	[a]
c	5,0	–	
d	4,4	–	
e	8,3	8,5	
f	8,0	8,5	
g	10°	14°	
h	–	2,3	diameter
i	3,07	3,13	diameter
j	4,35 nom.		diameter [b]
k	10,0 nom.		diameter [b]
l	11,47	11,53	diameter
m	12,5	–	diameter
n	14,7	14,8	diameter
o	M20 × 1	tolerance 6H	thread
p	22 nom.		wrench size
q	1,8	–	
r	20° nom.		
s	15,07	15,11	diameter
t	–	4,1	
u	0,5 nom.		radius
v	5,1	5,5	

[a] Applicable for inner and outer contact.

[b] For 50 Ω nominal impedance.

[c] Electrical reference plane.

Documents
Document Sharing Hub

Full document details: IEC 61169-54-2021

4.1.2 Connector with socket-centre contact (see Figure 2)

Dimensions in millimetres

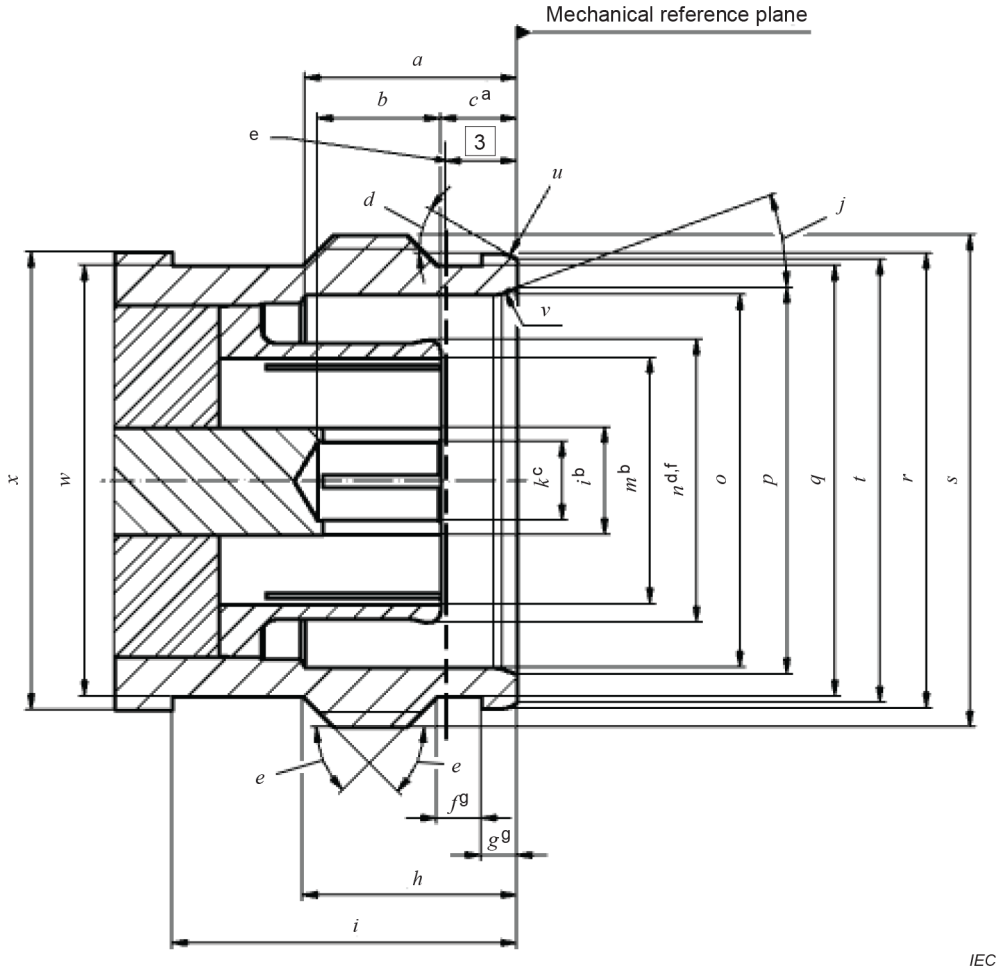

Figure 2 – Connector with socket-centre contact (for dimensions and key, see Table 2)

Documents
Document Sharing Hub
Full document details: IEC 61169-54-2021

Table 2 – Dimensions of connector with socket-centre contact

Ref.	mm		Additional notes
	Min.	Max.	
a	8,5	–	
b	5,0	–	
c	3,1	3,5	[a]
d	30° nom.		
e	45° nom.		[g]
f	1,7	1,9	[g]
g	1,44	1,50	[g]
h	8,7	9,0	
i	13,9	14,1	
j	20° nom.		
k			[c]
l	4,35 nom.		diameter [b]
m	9,8	10,2	diameter [b]
n	–	12,3	[d, f]
o	15,13	15,19	diameter
p	15,7	15,9	diameter
q	17,4	17,5	diameter [g]
r	18,44	18,5	diameter [g]
s	M20 × 1	tolerance 6g	thread
t	17,9	18,1	diameter
u	0,6 nom.		radius
v	1,0 nom.		radius
w	17,45	17,55	diameter
x	18,6	–	diameter

[a] Applicable for inner and outer contact.

[b] For 50 Ω nominal impedance.

[c] Resilient to meet the requirements with gauge pins for socket centre contact.

[d] Expand to meet the requirements with gauge rings for socket outer contact.

[e] Electrical reference plane.

[f] In unmated condition.

[g] Rim and groove on socket front provided for quick lock attachment.

Documents
Document Sharing Hub

Full document details: IEC 61169-54-2021

4.1.3 Presentation of possible coupling mechanisms

4.1.3.1 Screw type (see Figure 3)

Dimensions in millimetres

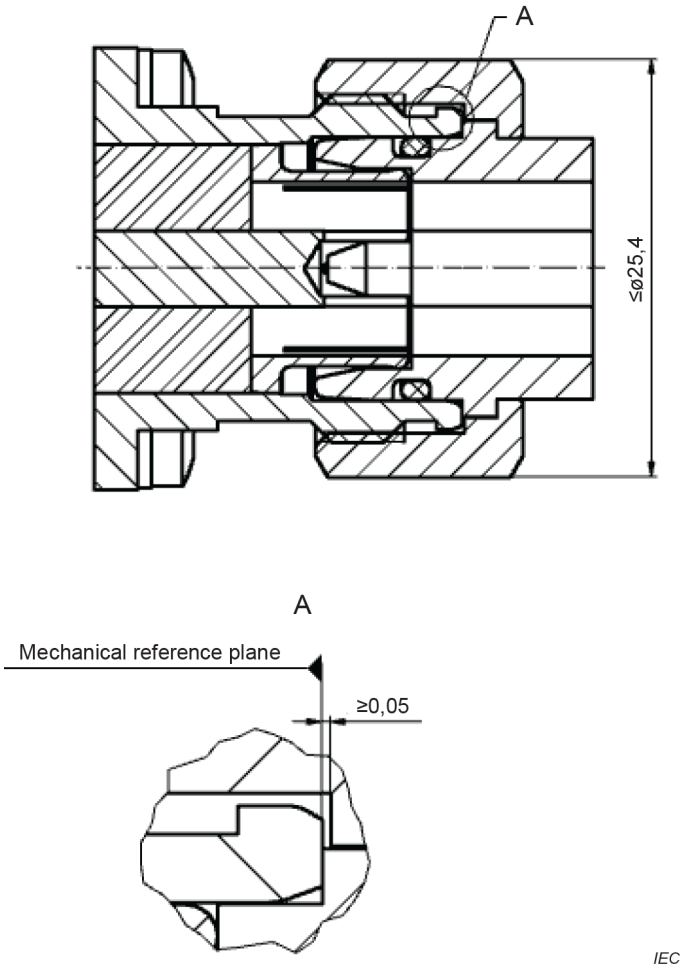

Figure 3 – Screw type

Documents
Document Sharing Hub
Full document details: IEC 61169-54-2021

4.1.3.2 Hand screw type (see Figure 4)

Dimensions in millimetres

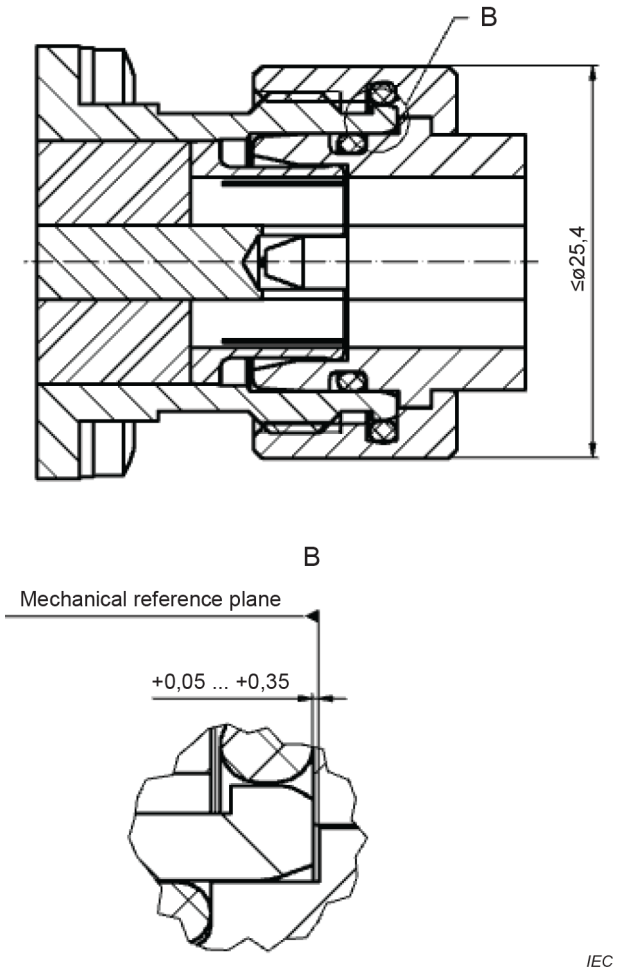

Figure 4 – Hand screw type

Documents
Document Sharing Hub
Full document details: IEC 61169-54-2021

4.1.3.3 Quick lock type (see Figure 5)

Dimensions in millimetres

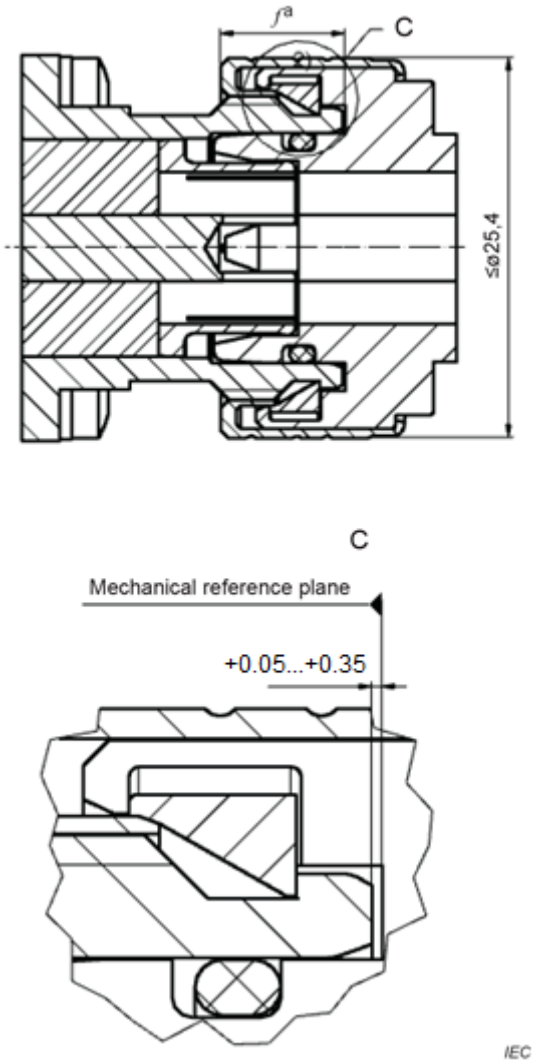

[a] Max 13,5 mm for this variant.

Figure 5 – Quick lock type

Documents
Document Sharing Hub
Full document details: IEC 61169-54-2021

4.2 Gauges

4.2.1 Gauge pins for socket-centre contact (see Figure 6)

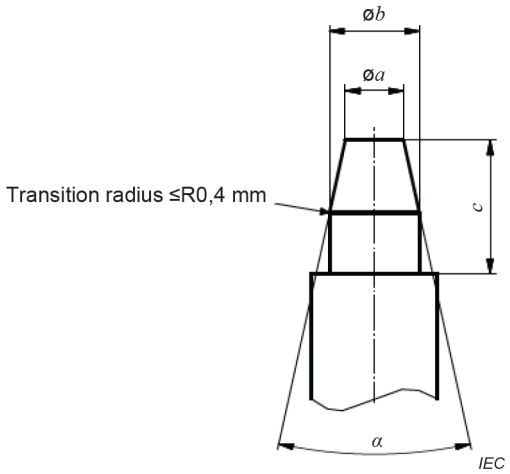

Figure 6 – Gauge pins for socket-centre contact (for dimensions, see Table 3)

Table 3 – Dimensions of gauge pins for socket-centre contact

Gauge A			Gauge B	
Ref.	mm		mm	
	Min.	Max.	Min.	Max.
a	2,27	2,33	2,27	2,33
b	3,13	3,137	3,063	3,07
c	4,8	5	4,8	5,0
α	44°	46°	36°	44°
Material: steel, polished, surface roughness: Ra = 0,4 µm maximum.				

4.2.2 Test procedure

The gauge A shall be completely inserted three times into the socket centre contact. This is a sizing operation.

After sizing, gauge A shall be inserted into socket centre contact. The insertion force shall not exceed 20 N.

Separation force is measured with gauge B and shall require a minimum force of 1,5 N.

Documents
Document Sharing Hub
Full document details: IEC 61169-54-2021

4.2.3 Gauge rings for plug outer contact (see Figure 7)

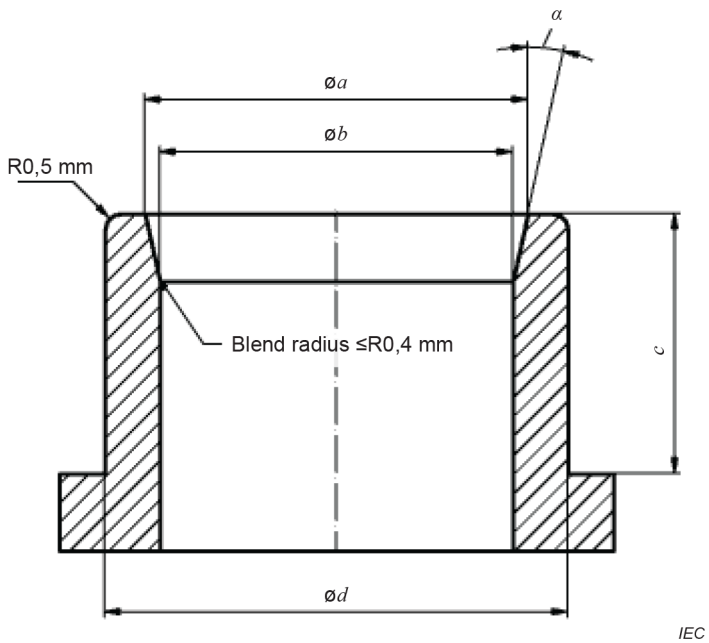

Figure 7 – Gauge rings for socket outer contact (for dimensions see Table 4)

Table 4 – Dimensions of gauge rings for socket outer contact

Gauge A			Gauge B	
Ref.	mm		mm	
	Min.	Max.	Min.	Max.
a	12,45	12,65	12,45	12,65
b	11,46	11,48	11,53	11,537
c	8,3	8,5	8,3	8,5
d	15,04	15,08	–	14,8
α	14°	15°	10°	14°
Material: steel, polished, surface roughness: Ra = 0,4 µm maximum.				

4.2.4 Test procedure

The gauge A shall be completely inserted three times into the resilient outer contact. This is a sizing operation.

After sizing, gauge A shall be inserted into the resilient contact. The insertion force shall not exceed 35 N.

Separation force is measured with gauge B and shall require a minimum force of 4 N. All contact segments shall touch the diameter *b* in the region of the tips.

Documents
Document Sharing Hub
Full document details: IEC 61169-54-2021

4.3 Dimensions – Standard test connectors – Grade 0

4.3.1 Connector with pin-centre contact (see Figure 8)

Dimensions in millimetres

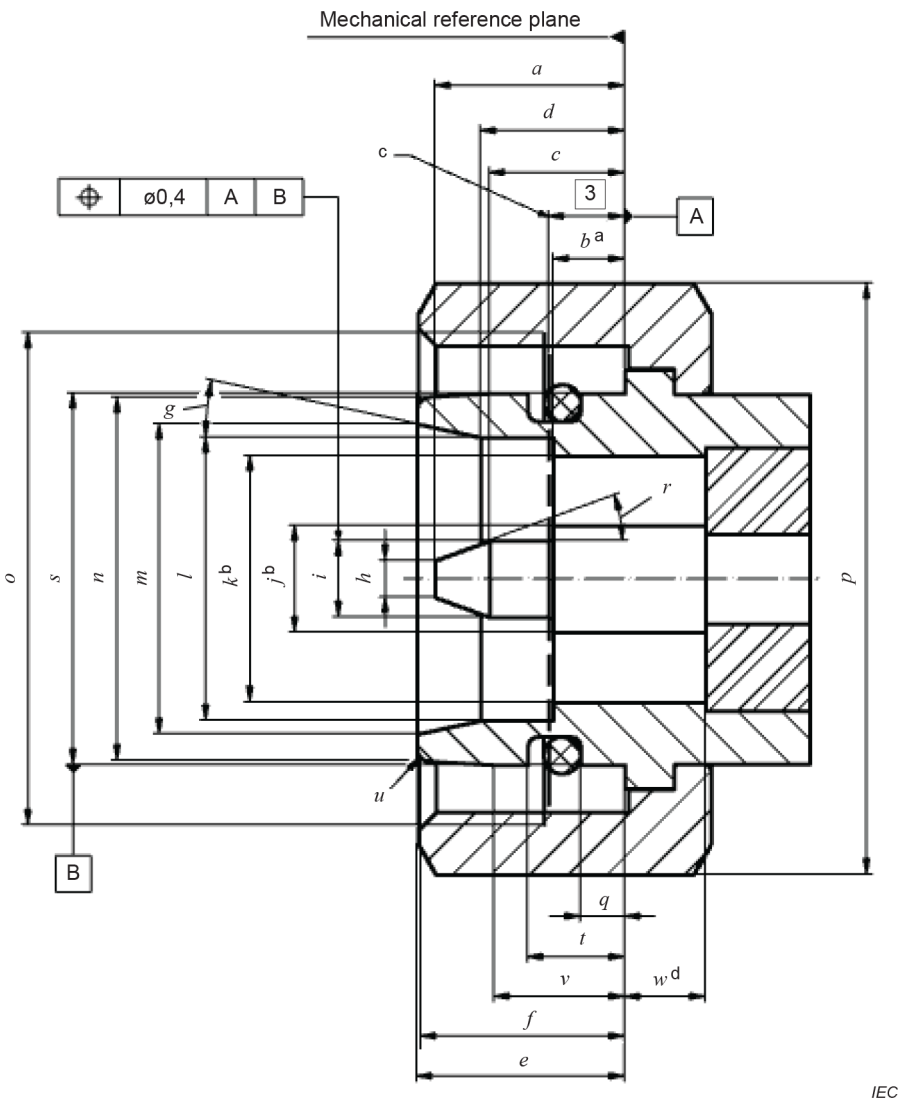

Figure 8 – Connector with pin-centre contact (for dimensions and key, see Table 5)

Documents
Document Sharing Hub
Full document details: IEC 61169-54-2021

Table 5 – Dimensions of connector with pin-centre contact

Ref.	mm		Additional notes
	Min.	Max.	
a	–	8,0	
b	2,8	2,9	[a]
c	5,0	–	
d	4,4	–	
e	8,3	8,5	
f	8,0	8,5	
g	10°	14°	
h	–	2,3	diameter
i	3,085	3,115	diameter
j	4,35 nom.		diameter [b]
k	9,98	10,02	diameter [b]
l	11,485	11,515	diameter
m	12,5	–	diameter
n	14,7	14,8	diameter
o	M20 × 1	tolerance 6H	thread
p	22 nom.		wrench size
q	1,8	–	
r	20° nom.		
s	15,07	15,11	diameter
t	–	4,1	
u	0,5 nom.		radius
v	5,1	5,5	
w	15	–	[d]

[a] Applicable for inner and outer contact.

[b] For 50 Ω ± 0,3 Ω impedance.

[c] Electrical reference plane.

[d] Minimum distance to insulating bead.

Documents
Document Sharing Hub

Full document details: IEC 61169-54-2021

4.3.2 Connector with socket-centre contact (see Figure 9)

Dimensions in millimetres

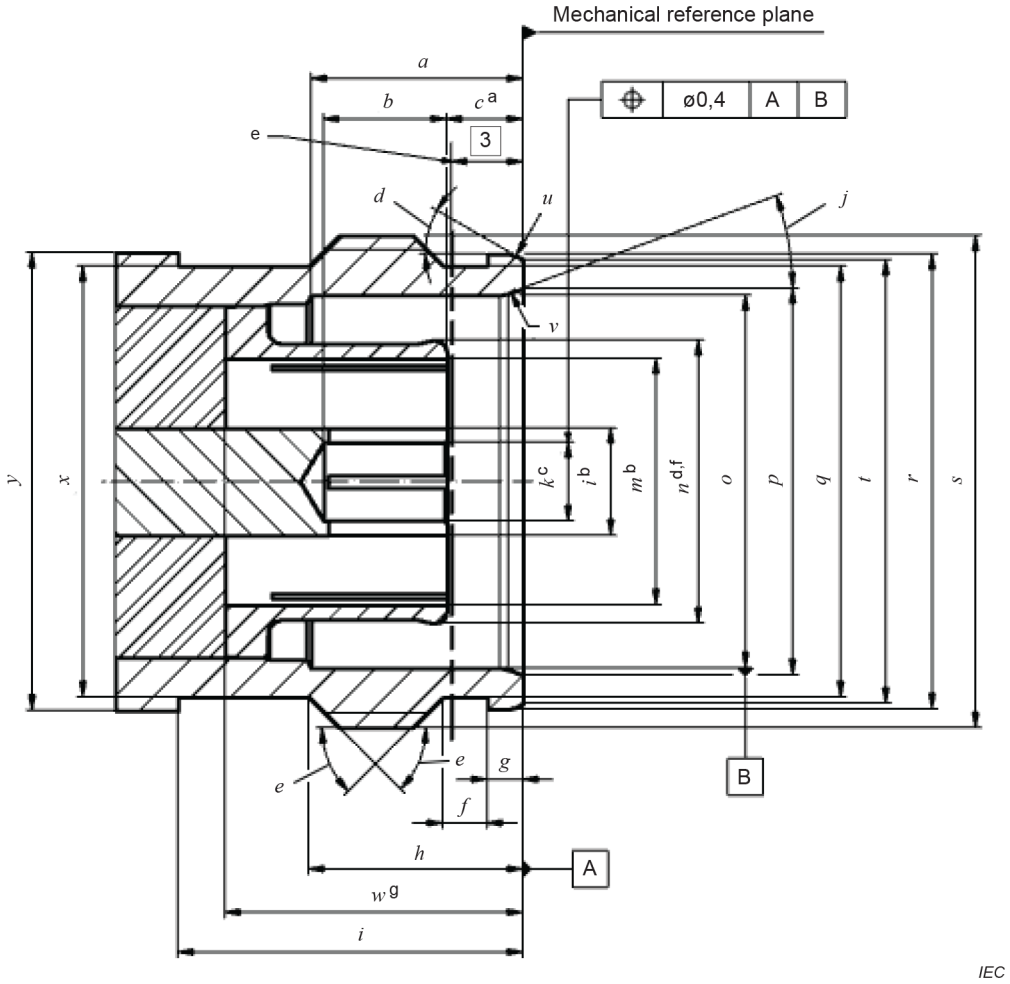

Figure 9 – Connector with socket-centre contact (for dimensions and key, see Table 6)

Documents
Document Sharing Hub
Full document details: IEC 61169-54-2021

Table 6 – Dimensions of connector with socket-centre contact

Ref.	mm		Additional notes
	Min.	Max.	
a	8,5	–	
b	5,0	–	
c	3,1	3,2	[a]
d	30° nom.		
e	45° nom.		
f	1,7	1,9	
g	1,44	1,50	
h	8,7	9,0	
i	13,9	14,1	
j	20° nom.		
k			[c]
l	4,35 nom.		diameter [b]
m	9,98	10,02	diameter [b]
n	–	12,3	[d, f]
o	15,13	15,17	diameter
p	15,7	15,9	diameter
q	17,4	17,5	diameter
r	18,44	18,5	diameter
s	M20 × 1	tolerance 6g	thread
t	17,9	18,1	diameter
u	0,6 nom.		radius
v	1,0 nom.		radius
w	15	–	[g]
x	17,45	17,55	diameter
y	18,6	–	diameter

[a] Applicable for inner and outer contact.

[b] For 50 Ω ± 0,3 Ω impedance.

[c] Resilient to meet the requirements with gauge pins for socket centre contact.

[d] Expand to meet the requirements with gauge rings for socket outer contact.

[e] Electrical reference plane.

[f] In unmated condition.

[g] Minimum distance to insulating bead.

5 Quality assessment procedure

5.1 General

Subclauses 5.2 to 5.4 provide recommended ratings, performance and test conditions to be considered when writing a detail specification (DS). They also provide an appropriate schedule of tests with minimum levels of conformance.

Documents
Document Sharing Hub

Full document details: IEC 61169-54-2021