# IEC 61169-60

Edition 1.0 2021-03

# INTERNATIONAL STANDARD

# NORME INTERNATIONALE

## Radio-frequency connectors – Part 60: Sectional specification for RF coaxial connectors with push on mating – Characteristic impedance 50 Ohm (type SMPM)

## Connecteurs pour fréquences radioélectriques – Partie 60: Spécification intermédiaire relative aux connecteurs coaxiaux pour fréquences radioélectriques avec couplage par poussée – Impédance caractéristique 50 Ohm (type SMPM)

IEC 61169-60:2021-03(en-fr)

Documents
Document Sharing Hub

Full document details: IEC 61169-60-2021

**THIS PUBLICATION IS COPYRIGHT PROTECTED**
**Copyright © 2021 IEC, Geneva, Switzerland**

All rights reserved. Unless otherwise specified, no part of this publication may be reproduced or utilized in any form or by any means, electronic or mechanical, including photocopying and microfilm, without permission in writing from either IEC or IEC's member National Committee in the country of the requester. If you have any questions about IEC copyright or have an enquiry about obtaining additional rights to this publication, please contact the address below or your local IEC member National Committee for further information.

Droits de reproduction réservés. Sauf indication contraire, aucune partie de cette publication ne peut être reproduite ni utilisée sous quelque forme que ce soit et par aucun procédé, électronique ou mécanique, y compris la photocopie et les microfilms, sans l'accord écrit de l'IEC ou du Comité national de l'IEC du pays du demandeur. Si vous avez des questions sur le copyright de l'IEC ou si vous désirez obtenir des droits supplémentaires sur cette publication, utilisez les coordonnées ci-après ou contactez le Comité national de l'IEC de votre pays de résidence.

IEC Central Office
3, rue de Varembé
CH-1211 Geneva 20
Switzerland

Tel.: +41 22 919 02 11
info@iec.ch
www.iec.ch

**About the IEC**
The International Electrotechnical Commission (IEC) is the leading global organization that prepares and publishes International Standards for all electrical, electronic and related technologies.

**About IEC publications**
The technical content of IEC publications is kept under constant review by the IEC. Please make sure that you have the latest edition, a corrigendum or an amendment might have been published.

**IEC publications search - webstore.iec.ch/advsearchform**
The advanced search enables to find IEC publications by a variety of criteria (reference number, text, technical committee, …). It also gives information on projects, replaced and withdrawn publications.

**IEC Just Published - webstore.iec.ch/justpublished**
Stay up to date on all new IEC publications. Just Published details all new publications released. Available online and once a month by email.

**IEC Customer Service Centre - webstore.iec.ch/csc**
If you wish to give us your feedback on this publication or need further assistance, please contact the Customer Service Centre: sales@iec.ch.

**IEC online collection - oc.iec.ch**
Discover our powerful search engine and read freely all the publications previews. With a subscription you will always have access to up to date content tailored to your needs.

**Electropedia - www.electropedia.org**
The world's leading online dictionary on electrotechnology, containing more than 22 000 terminological entries in English and French, with equivalent terms in 18 additional languages. Also known as the International Electrotechnical Vocabulary (IEV) online.

---

**A propos de l'IEC**
La Commission Electrotechnique Internationale (IEC) est la première organisation mondiale qui élabore et publie des Normes internationales pour tout ce qui a trait à l'électricité, à l'électronique et aux technologies apparentées.

**A propos des publications IEC**
Le contenu technique des publications IEC est constamment revu. Veuillez vous assurer que vous possédez l'édition la plus récente, un corrigendum ou amendement peut avoir été publié.

**Recherche de publications IEC - webstore.iec.ch/advsearchform**
La recherche avancée permet de trouver des publications IEC en utilisant différents critères (numéro de référence, texte, comité d'études, …). Elle donne aussi des informations sur les projets et les publications remplacées ou retirées.

**IEC Just Published - webstore.iec.ch/justpublished**
Restez informé sur les nouvelles publications IEC. Just Published détaille les nouvelles publications parues. Disponible en ligne et une fois par mois par email.

**Service Clients - webstore.iec.ch/csc**
Si vous désirez nous donner des commentaires sur cette publication ou si vous avez des questions contactez-nous: sales@iec.ch.

**IEC online collection - oc.iec.ch**
Découvrez notre puissant moteur de recherche et consultez gratuitement tous les aperçus des publications. Avec un abonnement, vous aurez toujours accès à un contenu à jour adapté à vos besoins.

**Electropedia - www.electropedia.org**
Le premier dictionnaire d'électrotechnologie en ligne au monde, avec plus de 22 000 articles terminologiques en anglais et en français, ainsi que les termes équivalents dans 16 langues additionnelles. Egalement appelé Vocabulaire Electrotechnique International (IEV) en ligne.

AVA Documents
Document Sharing Hub

Full document details: IEC 61169-60-2021

# IEC 61169-60

Edition 1.0 2021-03

# INTERNATIONAL STANDARD

# NORME INTERNATIONALE

## Radio-frequency connectors –
## Part 60: Sectional specification for RF coaxial connectors with push on mating – Characteristic impedance 50 Ohm (type SMPM)

## Connecteurs pour fréquences radioélectriques –
## Partie 60: Spécification intermédiaire relative aux connecteurs coaxiaux pour fréquences radioélectriques avec couplage par poussée – Impédance caractéristique 50 Ohm (type SMPM)

INTERNATIONAL
ELECTROTECHNICAL
COMMISSION

COMMISSION
ELECTROTECHNIQUE
INTERNATIONALE

ICS 33.120.30

ISBN 978-2-8322-9541-0

**Warning! Make sure that you obtained this publication from an authorized distributor.**
**Attention! Veuillez vous assurer que vous avez obtenu cette publication via un distributeur agréé.**

® Registered trademark of the International Electrotechnical Commission
Marque déposée de la Commission Electrotechnique Internationale

Documents
Document Sharing Hub

Full document details: IEC 61169-60-2021

CONTENTS

FOREWORD ..... 4
1 Scope ..... 6
2 Normative references ..... 6
3 Terms and definitions ..... 6
4 Mating face and gauge information ..... 7
4.1 Dimensions – General connectors – Grade 2 ..... 7
4.1.1 SMPM connector with pin-centre contact ..... 7
4.1.2 SMPM connector with socket-centre contact (see Figure 3) ..... 9
4.2 SMPM gauges ..... 10
4.2.1 SMPM gauge pin for socket-centre contact ..... 10
4.2.2 Gauges for outer contact of SMPM connector with socket-centre contact ..... 11
5 Quality assessment procedure ..... 19
5.1 General ..... 19
5.2 Rating and characteristics (see Clause 5 of IEC 61169-1:2013) ..... 19
5.3 Test schedule and inspection requirements ..... 22
5.3.1 Acceptance tests ..... 22
5.3.2 Periodic tests ..... 22
5.4 Procedures for the quality conformance ..... 24
5.4.1 Quality conformance inspection ..... 24
5.4.2 Quality conformance and its maintenance ..... 24
6 Instructions for preparation of detail specifications (DS) ..... 24
6.1 General ..... 24
6.2 Identification of the component ..... 24
6.3 Performances ..... 25
6.4 Marking, ordering information and related matters ..... 25
6.5 Selection of tests, test conditions and severities ..... 25
6.6 Blank detail specification pro-forma for type SMPM connector ..... 26
7 Marking ..... 30
7.1 Marking of component ..... 30
7.2 Marking and contents of package ..... 30

Figure 1 – SMPM connector with pin-centre contact – Full detent (for dimensions, see Table 1) ..... 7
Figure 2 – SMPM connector with pin-centre contact – Smooth bore (for dimensions, see Table 2) ..... 8
Figure 3 – SMPM connector with socket-centre contact (for dimensions, see Table 3) ..... 9
Figure 4 – SMPM gauge pin for socket-centre contact (for dimensions, see Table 4) ..... 10
Figure 5 – SMPM engagement force gauge – Full detent (for dimensions, see Table 5) ..... 11
Figure 6 – SMPM Separation force gauge – Full detent (for dimensions, see Table 6) ..... 13
Figure 7 – SMPM Engagement force gauge – Smooth bore (for dimensions, see Table 7) ..... 15
Figure 8 – SMPM Separation force gauge – Smooth bore (for dimensions, see Table 8) ..... 17
Figure 9 – SMPM gauge block (for dimensions, see Table 9) ..... 18

Table 1 – Dimensions of SMPM connector with pin-centre contact full detent ..... 7

AVA Documents
Document Sharing Hub
Full document details: IEC 61169-60-2021

Table 2 – Dimensions of SMPM connector with pin-centre contact – Smooth bore .....8
Table 3 – Dimensions of SMPM connector with socket-centre contact.....9
Table 4 – Dimensions of SMPM gauge pin for socket-centre contact.....10
Table 5 – Dimensions of SMPM engagement force gauge – Full detent .....12
Table 6 – Dimensions of SMPM separation force gauge – Full detent .....14
Table 7 – Dimensions of SMPM engagement force gauge – Smooth bore .....16
Table 8 – Dimensions of SMPM separation force gauge – Smooth bore .....18
Table 9 – Dimensions of SMPM gauge block .....19
Table 10 – Preferred climatic categories (see IEC 60068-1).....19
Table 11 – Rating and characteristics .....20
Table 12 – Acceptance tests .....22
Table 13 – Periodic tests .....23

Documents
Document Sharing Hub
Full document details: IEC 61169-60-2021

INTERNATIONAL ELECTROTECHNICAL COMMISSION

# RADIO-FREQUENCY CONNECTORS –

## Part 60: Sectional specification for RF coaxial connectors with push on mating – Characteristic impedance 50 Ohm (type SMPM)

## FOREWORD

1) The International Electrotechnical Commission (IEC) is a worldwide organization for standardization comprising all national electrotechnical committees (IEC National Committees). The object of IEC is to promote international co-operation on all questions concerning standardization in the electrical and electronic fields. To this end and in addition to other activities, IEC publishes International Standards, Technical Specifications, Technical Reports, Publicly Available Specifications (PAS) and Guides (hereafter referred to as "IEC Publication(s)"). Their preparation is entrusted to technical committees; any IEC National Committee interested in the subject dealt with may participate in this preparatory work. International, governmental and non-governmental organizations liaising with the IEC also participate in this preparation. IEC collaborates closely with the International Organization for Standardization (ISO) in accordance with conditions determined by agreement between the two organizations.
2) The formal decisions or agreements of IEC on technical matters express, as nearly as possible, an international consensus of opinion on the relevant subjects since each technical committee has representation from all interested IEC National Committees.
3) IEC Publications have the form of recommendations for international use and are accepted by IEC National Committees in that sense. While all reasonable efforts are made to ensure that the technical content of IEC Publications is accurate, IEC cannot be held responsible for the way in which they are used or for any misinterpretation by any end user.
4) In order to promote international uniformity, IEC National Committees undertake to apply IEC Publications transparently to the maximum extent possible in their national and regional publications. Any divergence between any IEC Publication and the corresponding national or regional publication shall be clearly indicated in the latter.
5) IEC itself does not provide any attestation of conformity. Independent certification bodies provide conformity assessment services and, in some areas, access to IEC marks of conformity. IEC is not responsible for any services carried out by independent certification bodies.
6) All users should ensure that they have the latest edition of this publication.
7) No liability shall attach to IEC or its directors, employees, servants or agents including individual experts and members of its technical committees and IEC National Committees for any personal injury, property damage or other damage of any nature whatsoever, whether direct or indirect, or for costs (including legal fees) and expenses arising out of the publication, use of, or reliance upon, this IEC Publication or any other IEC Publications.
8) Attention is drawn to the Normative references cited in this publication. Use of the referenced publications is indispensable for the correct application of this publication.
9) Attention is drawn to the possibility that some of the elements of this IEC Publication may be the subject of patent rights. IEC shall not be held responsible for identifying any or all such patent rights.

IEC 61169-60 has been prepared by subcommittee 46F: RF and microwave passive components, of IEC technical committee 46: Cables, wires, waveguides, RF connectors, RF and microwave passive components and accessories. It is an International Standard.

The text of this International Standard is based on the following documents:

| FDIS | Report on voting |
|---|---|
| 46F/548/FDIS | 46F/555/RVD |

Full information on the voting for its approval can be found in the report on voting indicated in the above table.

The language used for the development of this International Standard is English.

Documents
Document Sharing Hub

Full document details: IEC 61169-60-2021

This document was drafted in accordance with ISO/IEC Directives, Part 2, and developed in accordance with ISO/IEC Directives, Part 1 and ISO/IEC Directives, IEC Supplement, available at www.iec.ch/members_experts/refdocs. The main document types developed by IEC are described in greater detail at www.iec.ch/standardsdev/publications.

A list of all parts of the IEC 61169 series, under the general title *Radio-frequency connectors*, can be found on the IEC website.

The committee has decided that the contents of this document will remain unchanged until the stability date indicated on the IEC website under "http://webstore.iec.ch" in the data related to the specific document. At this date, the document will be

- reconfirmed,
- withdrawn,
- replaced by a revised edition, or
- amended.

Documents
Document Sharing Hub

Full document details: IEC 61169-60-2021

# RADIO-FREQUENCY CONNECTORS –

## Part 60: Sectional specification for RF coaxial connectors with push on mating – Characteristic impedance 50 Ohm (type SMPM)

## 1 Scope

This part of IEC 61169, which is a sectional specification (SS), provides information and rules for the preparation of detail specifications (DS) for RF coaxial connectors with push-on coupling, typically for use in 50 Ω RF cables or micro-strips in microwave, telecommunication, wireless systems and other fields (SMPM).

It specifies mating face dimensions for general purpose connectors – grade 2, dimensional details of standard test connectors-grade 0, gauging information and tests selected from IEC 61169-1, applicable to all detail specifications relating to series SMPM RF connectors.

This specification indicates recommended performance characteristics to be considered when writing a detail specification and it covers test schedules and inspection requirements for assessment levels M and H.

The SMPM push-on coupling structure series RF coaxial connectors with the characteristic of normative impedance 50 Ω are used with various kinds of RF cables or micro-strips in microwave, telecommunication, wireless systems. The operating frequency limit is up to 65 GHz.

NOTE Imperial dimensions are original dimensions. All undimensioned pictorial configurations are for reference purpose only.

## 2 Normative references

The following documents are referred to in the text in such a way that some or all of their content constitutes requirements of this document. For dated references, only the edition cited applies. For undated references, the latest edition of the referenced document (including any amendments) applies.

IEC 60068-1, *Environmental testing – Part 1: General and guidance*

IEC 61169-1:2013, *Radio frequency connectors – Part 1: Generic specification – General requirements and measuring methods*

IEC 62037 (all parts), *Passive RF and microwave devices, intermodulation level measurement*

## 3 Terms and definitions

No terms and definitions are listed in this document.

ISO and IEC maintain terminological databases for use in standardization at the following addresses:

- IEC Electropedia: available at http://www.electropedia.org/
- ISO Online browsing platform: available at http://www.iso.org/obp

Documents
Document Sharing Hub

Full document details: IEC 61169-60-2021

# 4 Mating face and gauge information

## 4.1 Dimensions – General connectors – Grade 2

### 4.1.1 SMPM connector with pin-centre contact

#### 4.1.1.1 SMPM connector with pin-centre contact – Full detent (see Figure 1)

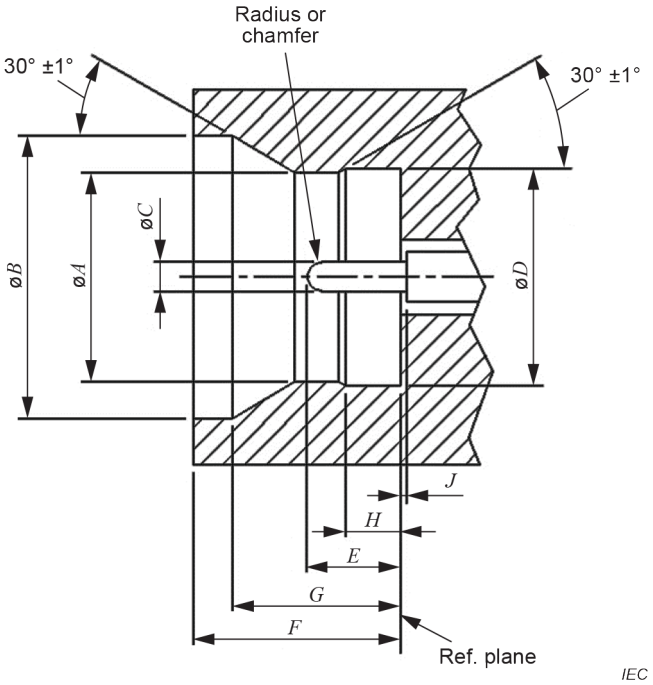


**Figure 1 – SMPM connector with pin-centre contact – Full detent (for dimensions, see Table 1)**

**Table 1 – Dimensions of SMPM connector with pin-centre contact full detent**

| Ref. | Inches (millimetres) | | Remarks |
|---|---|---|---|
| | min | max | |
| *A* | 0,083 (2,108) | 0,085 (2,159) | |
| *B* | 0,111 (2,819) | 0,115 (2,921) | |
| *C* | 0,0115 (0,292) | 0,0125 (0,318) | |
| *D* | 0,086 (2,184) | 0,088 (2,235) | |
| *E* | 0,030 (0,762) | 0,045 (1,143) | |
| *F* | 0,082 (2,083) | 0,084 (2,134) | |
| *G* | 0,062 (1,575) | 0,072 (1,829) | |
| *H* | 0,021 (0,533) | 0,023 (0,584) | |
| *J* | 0,000 (0,000) | | |

Documents
Document Sharing Hub
Full document details: IEC 61169-60-2021

#### 4.1.1.2 SMPM connector with pin-centre contact – Smooth bore (see Figure 2)

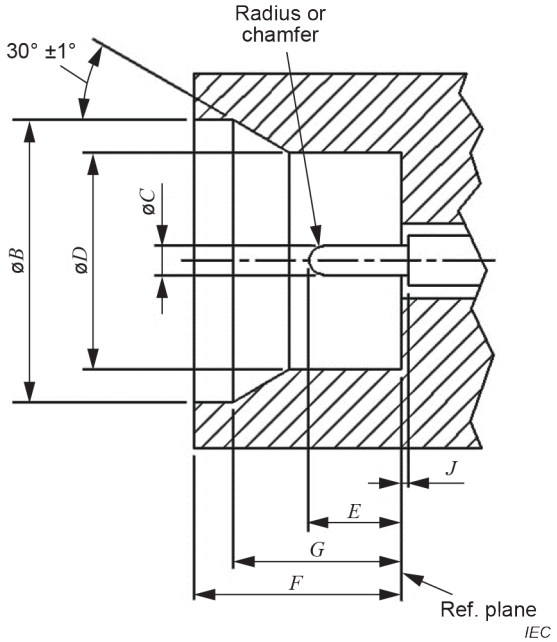


**Figure 2 – SMPM connector with pin-centre contact – Smooth bore (for dimensions, see Table 2)**

**Table 2 – Dimensions of SMPM connector with pin-centre contact – Smooth bore**

| Ref. | Inches (millimetres) | | Remarks |
|---|---|---|---|
| | min | max | |
| *B* | 0,111 (2,819) | 0,115 (2,921) | |
| *C* | 0,0115 (0,292) | 0,0125 (0,318) | |
| *D* | 0,086 (2,184) | 0,088 (2,235) | |
| *E* | 0,030 (0,762) | 0,045 (1,143) | |
| *F* | 0,082 (2,083) | 0,084 (2,134) | |
| *G* | 0,062 (1,575) | 0,072 (1,829) | |
| *J* | 0,000 (0,000) | | |

Documents
Document Sharing Hub
Full document details: IEC 61169-60-2021

### 4.1.2 SMPM connector with socket-centre contact (see Figure 3)

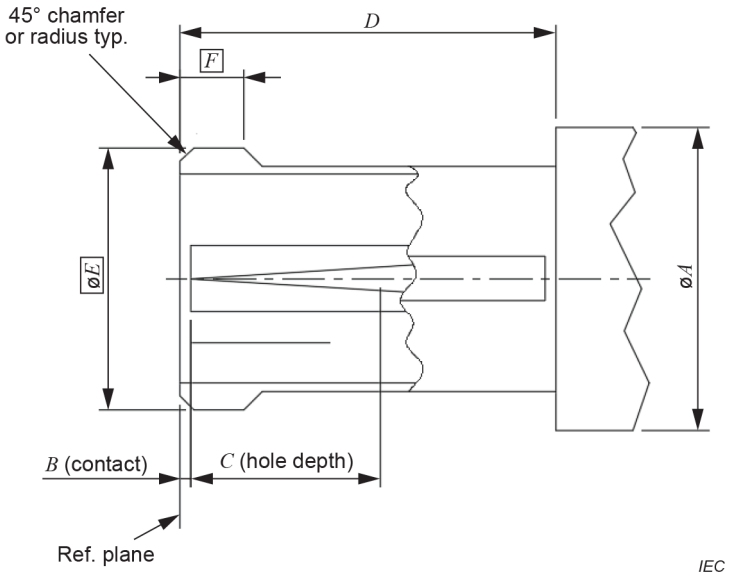


**Requirements**

Features shall meet the mechanical/electrical requirements when mated with connector with pin-centre contact.

**Figure 3 – SMPM connector with socket-centre contact (for dimensions, see Table 3)**

**Table 3 – Dimensions of SMPM connector with socket-centre contact**

| Ref. | Inches (millimetres) | | Remarks |
|---|---|---|---|
| | min | max | |
| *A* | | 0,110 (2,794) | |
| *B* | 0,000 (0,000) | 0,008 (0,203) | |
| *C* | 0,050 (1,270) | | |
| *D* | 0,068 (1,727) | | |
| *E* | | 0,095 (2,413) | |
| *F* | | 0,023 (0,584) | |

Documents
Document Sharing Hub
Full document details: IEC 61169-60-2021

## 4.2 SMPM gauges

### 4.2.1 SMPM gauge pin for socket-centre contact

Dimensions in inches (millimetres)

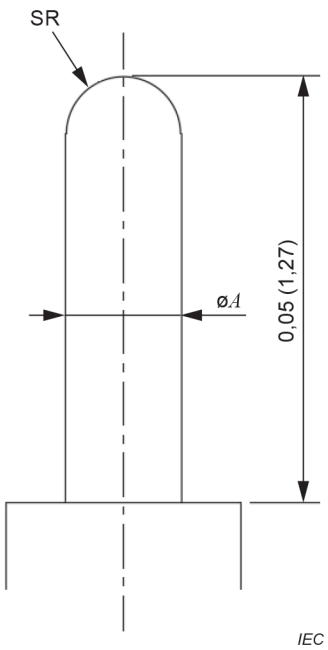


**Requirements**

1 Material: 440 stainless steel hardness 56 RC to 60 RC.

2 All surfaces shall be Ra 32 microinches (0,8 µm) maximum except the mating surfaces Ø*A* and spherical radius shall be Ra 16 microinches (0,4 µm) maximum.

**Figure 4 – SMPM gauge pin for socket-centre contact (for dimensions, see Table 4)**

**Table 4 – Dimensions of SMPM gauge pin for socket-centre contact**

| Ref. | Gauge A – Oversize | | Gauge B – Insertion force | | Gauge C – Retention force | |
|---|---|---|---|---|---|---|
| | Inches (millimetres) | | Inches (millimetres) | | Inches (millimetres) | |
| | min | max | min | max | min | max |
| *A* | 0,0130 (0,330) | 0,0131 (0,333) | 0,0125 (0,318) | 0,0126 (0,320) | 0,0114 (0,290) | 0,0115 (0,292) |

#### 4.2.1.1 Test procedure

##### 4.2.1.1.1 Insertion force

Figure 4 oversize gauge A shall be inserted into the socket-centre contact 3 times to a depth of 0,030 inch (0,762 mm) to 0,045 inch (1,143 mm).

Figure 4 insertion force gauge B shall be inserted into the socket-centre contact to a depth of 0,030 inch (0,762 mm) to 0,045 inch (1,143 mm). The insertion force measured shall be 24 oz. (6,67 N) maximum.

Documents
Document Sharing Hub
Full document details: IEC 61169-60-2021

#### 4.2.1.1.2 Retention force

Figure 4 retention force gauge C shall be inserted into the socket-centre contact to a depth of 0,030 inch (0,762 mm) to 0,045 inch (1,143 mm). The retention (withdrawal) force shall be 0,25 oz. (0,07 N) minimum.

### 4.2.2 Gauges for outer contact of SMPM connector with socket-centre contact

#### 4.2.2.1 Engagement force gauge – Full detent for outer contact of SMPM connector with socket-centre

Dimensions in inches (millimetres)

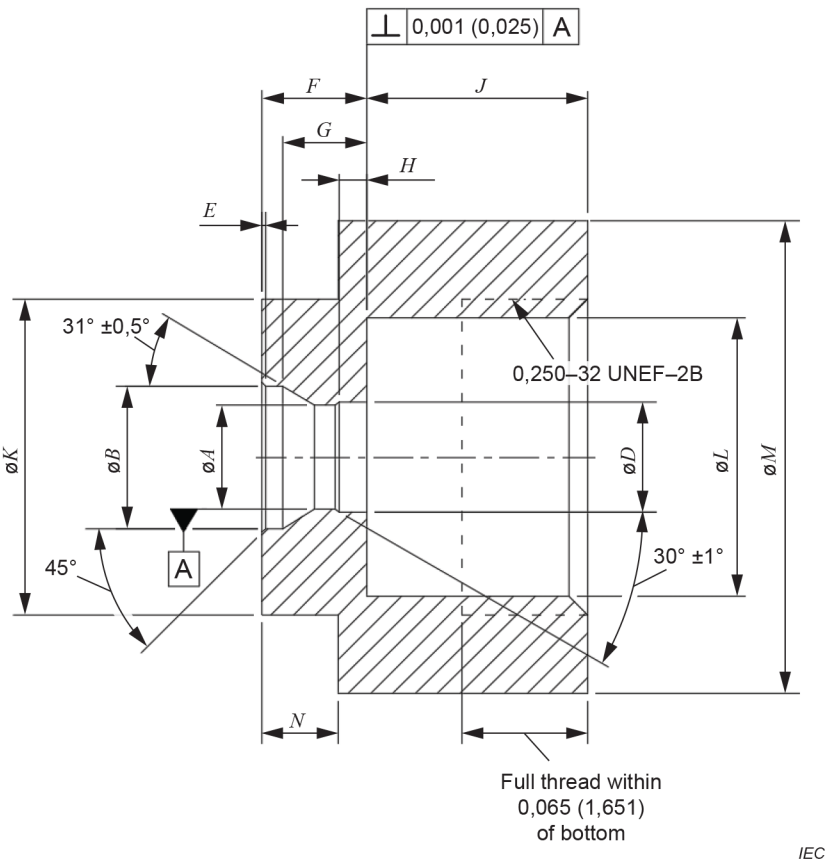


**Requirements**

1 Material – 440 stainless steel hardness 56-60 RC.

2 Break corners and edges 0,127 mm (0,005 inches) R. Max. Except ø*D* feature shall be 0,025 mm (0,001 inches) R. Max.

3 Remove all burrs.

4 All diameters concentric to datum A within 0,025 mm (0,001 inches) T.I.R.

5 All surfaces shall be Ra 0,8 µm (32 microinches) maximum except the mating surfaces 31° ±0,5°, øA, 30° ±1° and ø*D* shall be Ra 0,4 µm (16 microinches) maximum.

6 Chamfer first thread

7 No lubricant allowed

**Figure 5 – SMPM engagement force gauge – Full detent (for dimensions, see Table 5)**

Documents
Document Sharing Hub
Full document details: IEC 61169-60-2021

**Table 5 – Dimensions of SMPM engagement force gauge – Full detent**

| Ref. | Inches (millimetres) | | Remarks |
|---|---|---|---|
| | min | max | |
| *A* | 0,0829 (2,106) | 0,0831 (2,111) | |
| *B* | 0,111 (2,819) | 0,115 (2,921) | |
| *D* | 0,086 (2,184) | 0,088 (2,235) | |
| *E* | 0,002 (0,051) | 0,004 (0,102) | |
| *F* | 0,082 (2,083) | 0,084 (2,134) | |
| *G* | 0,062 (1,575) | 0,072 (1,829) | |
| *H* | 0,021 (0,533) | 0,023 (0,584) | |
| *J* | 0,170 (4,318) | 0,180 (4,572) | |
| *K* | 0,245 (6,223) | 0,255 (6,477) | |
| *L* | 0,217 (5,512) | 0,223 (5,664) | |
| *M* | 0,370 (9,398) | 0,380 (9,652) | |
| *N* | 0,055 (1,397) | 0,065 (1,651) | |

#### 4.2.2.2 Test procedure

The force gauge shall be threaded onto the Figure 9 SMPM Gauge Block and torqued sufficiently to prevent loosening of the thread during force measurement.

Figure 5 engagement force gauge – Full detent shall be fully mated 5 times with the outer contact of the connector. The engagement force shall be measured on the insertion of the fifth mating cycle. The engagement force shall be 8 lbs. (35,59 N) maximum.

Documents
Document Sharing Hub

Full document details: IEC 61169-60-2021

### 4.2.2.3 Separation force gauge – Full detent for outer contact of SMPM connector with socket-centre

Dimensions in inches (millimetres)

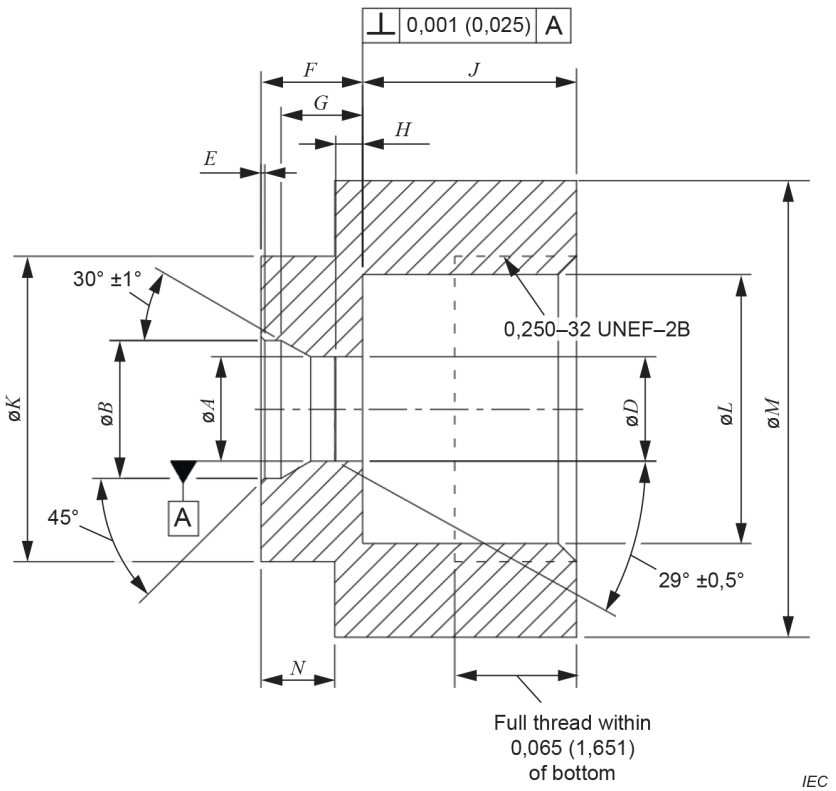


**Requirements**

1 Material – 440 stainless steel hardness 56-60 RC.

2 Break corners and edges 0,127 mm (0,005 inches) R. Max. Except ø*D* feature shall be 0,025 mm (0,001 inches) R. Max.

3 Remove all burrs.

4 All diameters concentric to datum A within 0,025 mm (0,001 inches) T.I.R.

5 All surfaces shall be Ra 0,8 µm (32 microinches) maximum except the mating surfaces 30° ±1°, øA, 29° ±0,5° and ø*D* shall be Ra 0,4 µm (16 microinches) maximum.

6 Chamfer first thread

7 No lubricant allowed

**Figure 6 – SMPM Separation force gauge – Full detent (for dimensions, see Table 6)**

Documents
Document Sharing Hub
Full document details: IEC 61169-60-2021

**Table 6 – Dimensions of SMPM separation force gauge – Full detent**

| Ref. | Inches (millimetres) | | Remarks |
|---|---|---|---|
| | min | max | |
| *A* | 0,0849 (2,156) | 0,0851 (2,162) | |
| *B* | 0,111 (2,819) | 0,115 (2,921) | |
| *D* | 0,0859 (2,182) | 0,0861 (2,187) | |
| *E* | 0,002 (0,051) | 0,004 (0,102) | |
| *F* | 0,082 (2,083) | 0,084 (2,134) | |
| *G* | 0,062 (1,575) | 0,072 (1,829) | |
| *H* | 0,021 (0,533) | 0,023 (0,584) | |
| *J* | 0,170 (4,318) | 0,180 (4,572) | |
| *K* | 0,245 (6,223) | 0,255 (6,477) | |
| *L* | 0,217 (5,512) | 0,223 (5,664) | |
| *M* | 0,370 (9,398) | 0,380 (9,652) | |
| *N* | 0,055 (1,397) | 0,065 (1,651) | |

#### 4.2.2.4 Test procedure

The force gauge shall be threaded onto the Figure 9 SMPM gauge block and torqued sufficiently to prevent loosening of the thread during force measurement.

Figure 6 separation force gauge – Full detent shall be fully mated 5 times with the outer contact of the connector. The separation force shall be measured on the withdrawal of the fifth mating cycle. The separation force shall be 3 lbs. (13,34 N) minimum.

Documents
Document Sharing Hub

Full document details: IEC 61169-60-2021

#### 4.2.2.5 Engagement force gauge – Smooth bore for outer contact of SMPM connector with socket-centre

Dimensions in inches (millimetres)

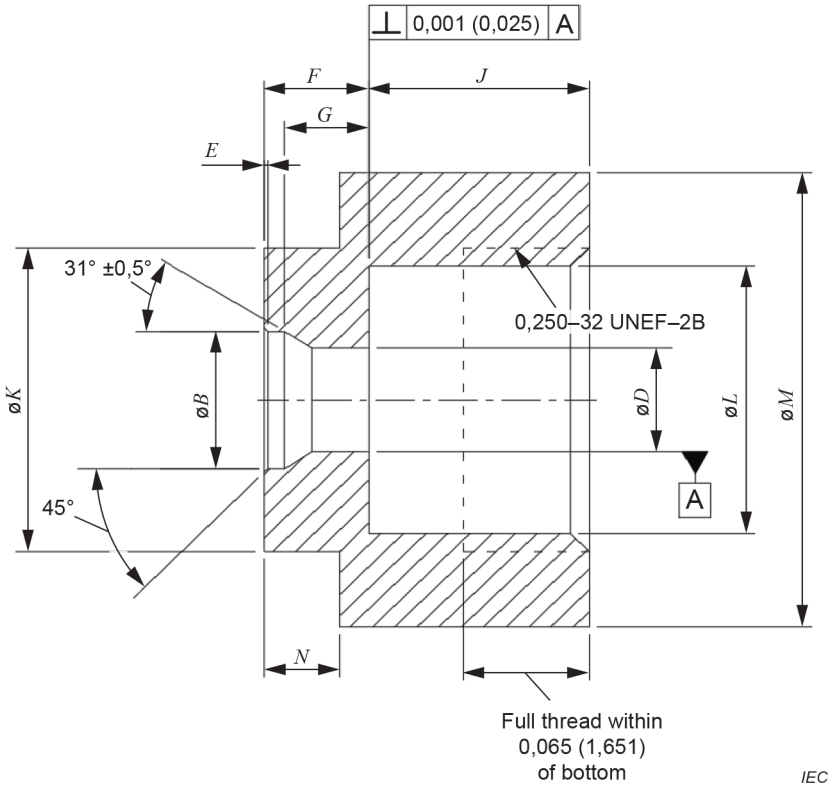


**Requirements**

1 Material – 440 stainless steel hardness 56-60 RC.

2 Break corners and edges 0,127 mm (0,005 inches) R. Max. Except ø*D* feature shall be 0,025 mm (0,001 inches) R. Max.

3 Remove all burrs.

4 All diameters concentric to datum A within 0,025 mm (0,001 inches) T.I.R.

5 All surfaces shall be Ra 0,8 µm (32 microinches) maximum except the mating surfaces 31° ±0,5° and ø*D* shall be Ra 0,4 µm (16 microinches) maximum.

6 Chamfer first thread

7 No lubricant allowed

**Figure 7 – SMPM Engagement force gauge – Smooth bore (for dimensions, see Table 7)**

Documents
Document Sharing Hub
Full document details: IEC 61169-60-2021

**Table 7 – Dimensions of SMPM engagement force gauge – Smooth bore**

| Ref. | Inches (millimetres) | | Remarks |
|---|---|---|---|
| | min | max | |
| *B* | 0,111 (2,819) | 0,115 (2,921) | |
| *D* | 0,0859 (2,182) | 0,0861 (2,187) | |
| *E* | 0,002 (0,051) | 0,004 (0,102) | |
| *F* | 0,082 (2,083) | 0,084 (2,134) | |
| *G* | 0,062 (1,575) | 0,072 (1,829) | |
| *J* | 0,170 (4,318) | 0,180 (4,572) | |
| *K* | 0,245 (6,223) | 0,255 (6,477) | |
| *L* | 0,217 (5,512) | 0,223 (5,664) | |
| *M* | 0,370 (9,398) | 0,380 (9,652) | |
| *N* | 0,055 (1,397) | 0,065 (1,651) | |

#### 4.2.2.6 Test procedure

The force gauge shall be threaded onto the Figure 9 SMPM gauge block and torqued sufficiently to prevent loosening of the thread during force measurement.

Figure 7 engagement force gauge – Smooth bore shall be fully mated 5 times with the outer contact of the connector. The engagement force shall be measured on the insertion of the fifth mating cycle. The engagement force shall be 4 lbs. (17,79 N) maximum.

Documents
Document Sharing Hub

Full document details: IEC 61169-60-2021

#### 4.2.2.7 Separation force gauge – Smooth bore for outer contact of SMPM connector with socket-centre

Dimensions in inches (millimetres)

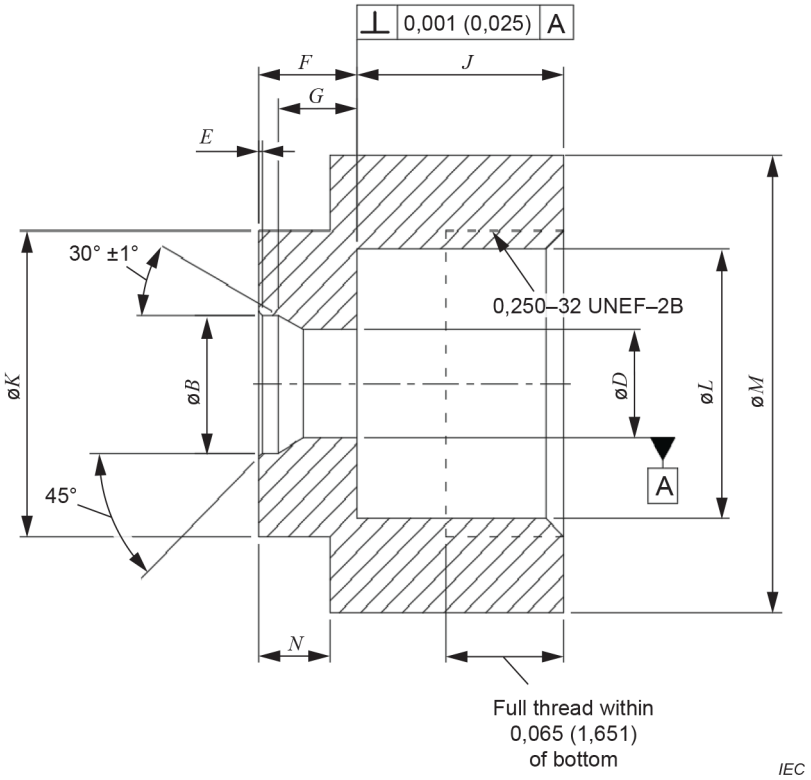


**Requirements**

1 Material – 440 stainless steel hardness 56-60 RC.

2 Break corners and edges 0,127 mm (0,005 inches) R. Max. Except ø*D* feature shall be 0,025 mm (0,001 inches) R. Max.

3 Remove all burrs.

4 All diameters concentric to datum A within 0,025 mm (0,001 inches) T.I.R.

5 All surfaces shall be Ra 0,8 µm (32 microinches) maximum except the mating surfaces 30° ±1° and ø*D* shall be Ra 0,4 µm (16 microinches) maximum.

6 Chamfer first thread

7 No lubricant allowed

**Figure 8 – SMPM Separation force gauge – Smooth bore (for dimensions, see Table 8)**

Documents
Document Sharing Hub
Full document details: IEC 61169-60-2021

**Table 8 – Dimensions of SMPM separation force gauge – Smooth bore**

| Ref. | Inches (millimetres) | | Remarks |
|---|---|---|---|
| | min | max | |
| *B* | 0,111 (2,819) | 0,115 (2,921) | |
| *D* | 0,0879 (2,233) | 0,0881 (2,238) | |
| *E* | 0,002 (0,051) | 0,004 (0,102) | |
| *F* | 0,082 (2,083) | 0,084 (2,134) | |
| *G* | 0,062 (1,575) | 0,072 (1,829) | |
| *J* | 0,170 (4,318) | 0,180 (4,572) | |
| *K* | 0,245 (6,223) | 0,255 (6,477) | |
| *L* | 0,217 (5,512) | 0,223 (5,664) | |
| *M* | 0,370 (9,398) | 0,380 (9,652) | |
| *N* | 0,055 (1,397) | 0,065 (1,651) | |

### 4.2.2.8 Test procedure

The force gauge shall be threaded onto the Figure 9 SMPM gauge block and torqued sufficiently to prevent loosening of the thread during force measurement.

Figure 8 separation force gauge – Smooth bore shall be fully mated 5 times with the outer contact of the connector. The separation force shall be measured on the withdrawal of the fifth mating cycle. The separation force shall be 0,5 lbs. (2,22 N) minimum.

### 4.2.2.9 SMPM gauge block

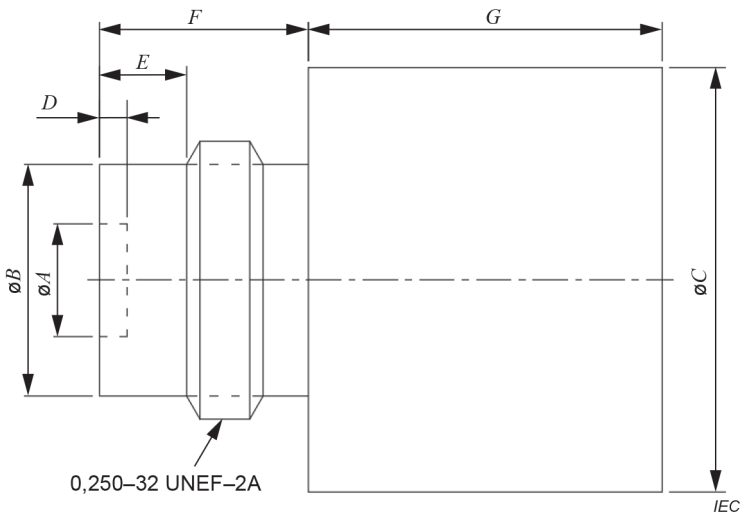


**Requirements**

1 Material – 440 stainless steel.

2 Break corners and edges 0,127 mm (0,005 inches) R. Max.

3 Remove all burrs.

4 All diameters concentric within 0,127 mm (0,005 inches) T.I.R.

5 All surfaces shall be Ra 1,6 µm (63 microinches) maximum

6 Chamfer first and last thread

**Figure 9 – SMPM gauge block (for dimensions, see Table 9)**

Documents
Document Sharing Hub
Full document details: IEC 61169-60-2021