IEC 61169-65

Edition 1.0 2021-01

INTERNATIONAL STANDARD

NORME INTERNATIONALE

Radio-frequency connectors – Part 65: Sectional specification for RF coaxial connectors, 1,35 mm inner diameter of outer conductor, with screw-coupling, characteristic impedance 50 Ω

Connecteurs pour fréquences radioélectriques – Partie 65: Spécification intermédiaire relative aux connecteurs coaxiaux pour fréquences radioélectriques, avec un diamètre intérieur du conducteur extérieur de 1,35 mm, à couplage à vis, impédance caractéristique de 50 Ω

IEC 61169-65:2021-01(en-fr)

Documents
Document Sharing Hub
Full document details: IEC 61169-65-2021

THIS PUBLICATION IS COPYRIGHT PROTECTED
Copyright © 2021 IEC, Geneva, Switzerland

All rights reserved. Unless otherwise specified, no part of this publication may be reproduced or utilized in any form or by any means, electronic or mechanical, including photocopying and microfilm, without permission in writing from either IEC or IEC's member National Committee in the country of the requester. If you have any questions about IEC copyright or have an enquiry about obtaining additional rights to this publication, please contact the address below or your local IEC member National Committee for further information.

Droits de reproduction réservés. Sauf indication contraire, aucune partie de cette publication ne peut être reproduite ni utilisée sous quelque forme que ce soit et par aucun procédé, électronique ou mécanique, y compris la photocopie et les microfilms, sans l'accord écrit de l'IEC ou du Comité national de l'IEC du pays du demandeur. Si vous avez des questions sur le copyright de l'IEC ou si vous désirez obtenir des droits supplémentaires sur cette publication, utilisez les coordonnées ci-après ou contactez le Comité national de l'IEC de votre pays de résidence.

IEC Central Office
3, rue de Varembé
CH-1211 Geneva 20
Switzerland

Tel.: +41 22 919 02 11
info@iec.ch
www.iec.ch

About the IEC
The International Electrotechnical Commission (IEC) is the leading global organization that prepares and publishes International Standards for all electrical, electronic and related technologies.

About IEC publications
The technical content of IEC publications is kept under constant review by the IEC. Please make sure that you have the latest edition, a corrigendum or an amendment might have been published.

IEC publications search - webstore.iec.ch/advsearchform
The advanced search enables to find IEC publications by a variety of criteria (reference number, text, technical committee, …). It also gives information on projects, replaced and withdrawn publications.

IEC Just Published - webstore.iec.ch/justpublished
Stay up to date on all new IEC publications. Just Published details all new publications released. Available online and once a month by email.

IEC Customer Service Centre - webstore.iec.ch/csc
If you wish to give us your feedback on this publication or need further assistance, please contact the Customer Service Centre: sales@iec.ch.

IEC online collection - oc.iec.ch
Discover our powerful search engine and read freely all the publications previews. With a subscription you will always have access to up to date content tailored to your needs.

Electropedia - www.electropedia.org
The world's leading online dictionary on electrotechnology, containing more than 22 000 terminological entries in English and French, with equivalent terms in 18 additional languages. Also known as the International Electrotechnical Vocabulary (IEV) online.

A propos de l'IEC
La Commission Electrotechnique Internationale (IEC) est la première organisation mondiale qui élabore et publie des Normes internationales pour tout ce qui a trait à l'électricité, à l'électronique et aux technologies apparentées.

A propos des publications IEC
Le contenu technique des publications IEC est constamment revu. Veuillez vous assurer que vous possédez l'édition la plus récente, un corrigendum ou amendement peut avoir été publié.

Recherche de publications IEC - webstore.iec.ch/advsearchform
La recherche avancée permet de trouver des publications IEC en utilisant différents critères (numéro de référence, texte, comité d'études, …). Elle donne aussi des informations sur les projets et les publications remplacées ou retirées.

IEC Just Published - webstore.iec.ch/justpublished
Restez informé sur les nouvelles publications IEC. Just Published détaille les nouvelles publications parues. Disponible en ligne et une fois par mois par email.

Service Clients - webstore.iec.ch/csc
Si vous désirez nous donner des commentaires sur cette publication ou si vous avez des questions contactez-nous: sales@iec.ch.

IEC online collection - oc.iec.ch
Découvrez notre puissant moteur de recherche et consultez gratuitement tous les aperçus des publications. Avec un abonnement, vous aurez toujours accès à un contenu à jour adapté à vos besoins.

Electropedia - www.electropedia.org
Le premier dictionnaire d'électrotechnologie en ligne au monde, avec plus de 22 000 articles terminologiques en anglais et en français, ainsi que les termes équivalents dans 16 langues additionnelles. Egalement appelé Vocabulaire Electrotechnique International (IEV) en ligne.

Documents
Document Sharing Hub

Full document details: IEC 61169-65-2021

IEC 61169-65

Edition 1.0 2021-01

INTERNATIONAL STANDARD

NORME INTERNATIONALE

Radio-frequency connectors – Part 65: Sectional specification for RF coaxial connectors, 1,35 mm inner diameter of outer conductor, with screw-coupling, characteristic impedance 50 Ω

Connecteurs pour fréquences radioélectriques – Partie 65: Spécification intermédiaire relative aux connecteurs coaxiaux pour fréquences radioélectriques, avec un diamètre intérieur du conducteur extérieur de 1,35 mm, à couplage à vis, impédance caractéristique de 50 Ω

INTERNATIONAL ELECTROTECHNICAL COMMISSION

COMMISSION ELECTROTECHNIQUE INTERNATIONALE

ICS 33.120.30

ISBN 978-2-8322-9259-4

Warning! Make sure that you obtained this publication from an authorized distributor.
Attention! Veuillez vous assurer que vous avez obtenu cette publication via un distributeur agréé.

® Registered trademark of the International Electrotechnical Commission
Marque déposée de la Commission Electrotechnique Internationale

AVA Documents
Document Sharing Hub

Full document details: IEC 61169-65-2021

CONTENTS

FOREWORD 3
1 Scope 5
2 Normative references 5
3 Terms and definitions 5
4 Mating face and gauge information 6
4.1 Dimensions – General purpose connectors – Grade 1 6
4.1.1 Connector with pin centre contact 6
4.1.2 General purpose connector with socket centre contact 7
4.2 Gauge pin for socket centre contact 8
4.2.1 Dimensions 8
4.2.2 Test procedure 8
4.3 Dimensions standard test connectors – Grade 0 8
4.3.1 Standard test connector with pin centre contact 8
4.3.2 Standard test connector with socket centre contact 9
5 Quality assessment procedures 11
5.1 General 11
5.2 Ratings and characteristics (see Clause 5 of IEC 61169-1:2013) 11
5.3 Test schedule and inspection requirements 12
5.3.1 Acceptance tests 12
5.3.2 Periodic tests 13
5.4 Procedures for quality conformance 15
5.4.1 Quality conformance inspection 15
5.4.2 Quality conformance and its maintenance 15
6 Instructions for preparation of detail specifications 15
6.1 General 15
6.2 Identification of the component 15
6.3 Performance 15
6.4 Marking, ordering information and related matters 16
6.5 Selection of tests, test conditions and severities 16
6.6 Blank detail specification pro-forma for 1,35 mm connectors 16

Figure 1 – General purpose connector with pin centre contact 6
Figure 2 – General purpose connector with socket centre contact 7
Figure 3 – Gauge pin for socket centre contact 8
Figure 4 – Standard test connector with pin centre contact 9
Figure 5 – Standard test connector with socket centre contact 10

Table 1 – Dimensions of connector with pin centre contact – Grade 1 6
Table 2 – Dimensions of connector with socket centre contact – Grade 1 7
Table 3 – Dimensions of gauge pin for socket centre contact 8
Table 4 – Dimensions of connector with pin centre contact – Grade 0 9
Table 5 – Dimensions of connector with socket centre contact – Grade 0 10
Table 6 – Ratings and characteristics 11
Table 7 – Acceptance tests 12
Table 8 – Periodic tests 13

Documents
Document Sharing Hub
Full document details: IEC 61169-65-2021

INTERNATIONAL ELECTROTECHNICAL COMMISSION

RADIO-FREQUENCY CONNECTORS –

Part 65: Sectional specification for RF coaxial connectors, 1,35 mm inner diameter of outer conductor, with screw-coupling, characteristic impedance 50 Ω

FOREWORD

1) The International Electrotechnical Commission (IEC) is a worldwide organization for standardization comprising all national electrotechnical committees (IEC National Committees). The object of IEC is to promote international co-operation on all questions concerning standardization in the electrical and electronic fields. To this end and in addition to other activities, IEC publishes International Standards, Technical Specifications, Technical Reports, Publicly Available Specifications (PAS) and Guides (hereafter referred to as "IEC Publication(s)"). Their preparation is entrusted to technical committees; any IEC National Committee interested in the subject dealt with may participate in this preparatory work. International, governmental and non-governmental organizations liaising with the IEC also participate in this preparation. IEC collaborates closely with the International Organization for Standardization (ISO) in accordance with conditions determined by agreement between the two organizations.
2) The formal decisions or agreements of IEC on technical matters express, as nearly as possible, an international consensus of opinion on the relevant subjects since each technical committee has representation from all interested IEC National Committees.
3) IEC Publications have the form of recommendations for international use and are accepted by IEC National Committees in that sense. While all reasonable efforts are made to ensure that the technical content of IEC Publications is accurate, IEC cannot be held responsible for the way in which they are used or for any misinterpretation by any end user.
4) In order to promote international uniformity, IEC National Committees undertake to apply IEC Publications transparently to the maximum extent possible in their national and regional publications. Any divergence between any IEC Publication and the corresponding national or regional publication shall be clearly indicated in the latter.
5) IEC itself does not provide any attestation of conformity. Independent certification bodies provide conformity assessment services and, in some areas, access to IEC marks of conformity. IEC is not responsible for any services carried out by independent certification bodies.
6) All users should ensure that they have the latest edition of this publication.
7) No liability shall attach to IEC or its directors, employees, servants or agents including individual experts and members of its technical committees and IEC National Committees for any personal injury, property damage or other damage of any nature whatsoever, whether direct or indirect, or for costs (including legal fees) and expenses arising out of the publication, use of, or reliance upon, this IEC Publication or any other IEC Publications.
8) Attention is drawn to the Normative references cited in this publication. Use of the referenced publications is indispensable for the correct application of this publication.
9) Attention is drawn to the possibility that some of the elements of this IEC Publication may be the subject of patent rights. IEC shall not be held responsible for identifying any or all such patent rights.

International Standard IEC 61169-65 has been prepared by subcommittee 46F: RF and microwave passive components, of IEC technical committee 46: Cables, wires, waveguides, RF connectors, RF and microwave passive components and accessories.

The text of this International Standard is based on the following documents:

FDIS	Report on voting
46F/527/FDIS	46F/542/RVD

Full information on the voting for the approval of this International Standard can be found in the report on voting indicated in the above table.

Documents
Document Sharing Hub

Full document details: IEC 61169-65-2021

This document has been drafted in accordance with the ISO/IEC Directives, Part 2.

A list of all parts of the IEC 61169 series, under the general title: *Radio-frequency connectors*, can be found on the IEC website.

The committee has decided that the contents of this document will remain unchanged until the stability date indicated on the IEC website under "http://webstore.iec.ch" in the data related to the specific document. At this date, the document will be

- reconfirmed,
- withdrawn,
- replaced by a revised edition, or
- amended.

Documents
Document Sharing Hub

Full document details: IEC 61169-65-2021

RADIO-FREQUENCY CONNECTORS –

Part 65: Sectional specification for RF coaxial connectors, 1,35 mm inner diameter of outer conductor, with screw-coupling, characteristic impedance 50 Ω

1 Scope

This part of IEC 61169, which is a sectional specification (SS), provides information and rules for the preparation of detail specifications (DS) for series 1,35 mm RF coaxial connectors with screw coupling, characteristic impedance 50 Ω, for operating frequencies up to 90 GHz. Typical use in test and measurement applications.

It describes mating face dimensions for general purpose connectors – grade 1, dimensional details of standard test connectors-grade 0, gauging information and tests selected from IEC 61169-1, applicable to all detail specifications relating to series 1,35 mm RF connectors.

This specification indicates recommended performance characteristics to be considered when writing a detail specification and it covers test schedules and inspection requirements for assessment levels M and H.

NOTE Metric dimensions are original dimensions. All undimensioned pictorial configurations are for reference purpose only.

2 Normative references

The following documents are referred to in the text in such a way that some or all of their content constitutes requirements of this document. For dated references, only the edition cited applies. For undated references, the latest edition of the referenced document (including any amendments) applies.

IEC 61169-1:2013, *Radio frequency connectors – Part 1: Generic specification – General requirements and measuring methods*

IEC 61726, *Cable assemblies, cables, connectors and passive microwave components – Screening attenuation measurement by the reverberation chamber method*

IEC 62037, *Passive RF and microwave devices, intermodulation level measurement*

IEC 62153-4-7, *Metallic communication cables test methods – Part 4-7: Electromagnetic compatibility (EMC) – Test method for measuring of transfer impedance Z_T and screening attenuation a_s or coupling attenuation a_c of connectors and assemblies up to and above 3 GHz – Triaxial tube in tube method*

3 Terms and definitions

No terms and definitions are listed in this document.

ISO and IEC maintain terminological databases for use in standardization at the following addresses:

- IEC Electropedia: available at http://www.electropedia.org/
- ISO Online browsing platform: available at http://www.iso.org/obp

Documents
Document Sharing Hub

Full document details: IEC 61169-65-2021

4 Mating face and gauge information

4.1 Dimensions – General purpose connectors – Grade 1

4.1.1 Connector with pin centre contact

The mating face of connector with pin centre contact is shown in Figure 1 and the dimensions are given in Table 1.

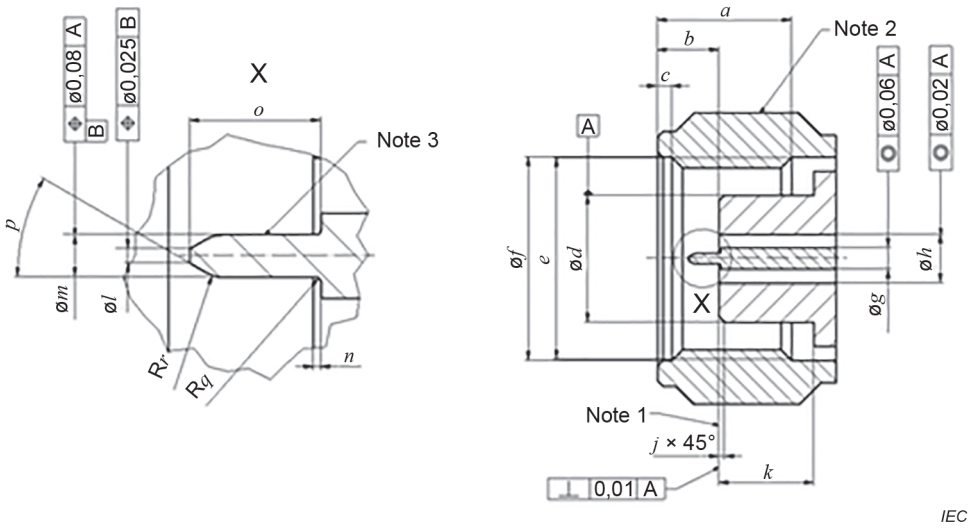

Figure 1 – General purpose connector with pin centre contact

Table 1 – Dimensions of connector with pin centre contact – Grade 1

Ref.	mm (°)		Remarks
	Min.	Max.	
a	3,700	4,000	
b	1,600	2,100	
c	0,300	0,500	
d	3,450	3,490	Diameter
e	M5,5x0,5-6H		Thread
f	5,700	5,800	Diameter
g	0,576	0,596	Diameter
h	1,335	1,365	Diameter
j	0,200	0,250	Chamfer
k	2,600	2,700	
l	0,100	0,150	Diameter
m	0,274	0,300	Diameter
n	0,003	0,050	
o	0,900	1,100	
p	30° nom.		
q	0,000	0,030	Radius
r	0,000	0,300	Radius
NOTE 1 Mechanical and electrical reference plane. NOTE 2 Spanner flat size 8, alternatively flat size 7 or ¼” for special applications. NOTE 3 Surface roughness Ra < 0,4 µm.			

Documents
Document Sharing Hub
Full document details: IEC 61169-65-2021

4.1.2 General purpose connector with socket centre contact

The mating face of connector with socket centre contact is shown in Figure 2 and its dimensions are given in Table 2.

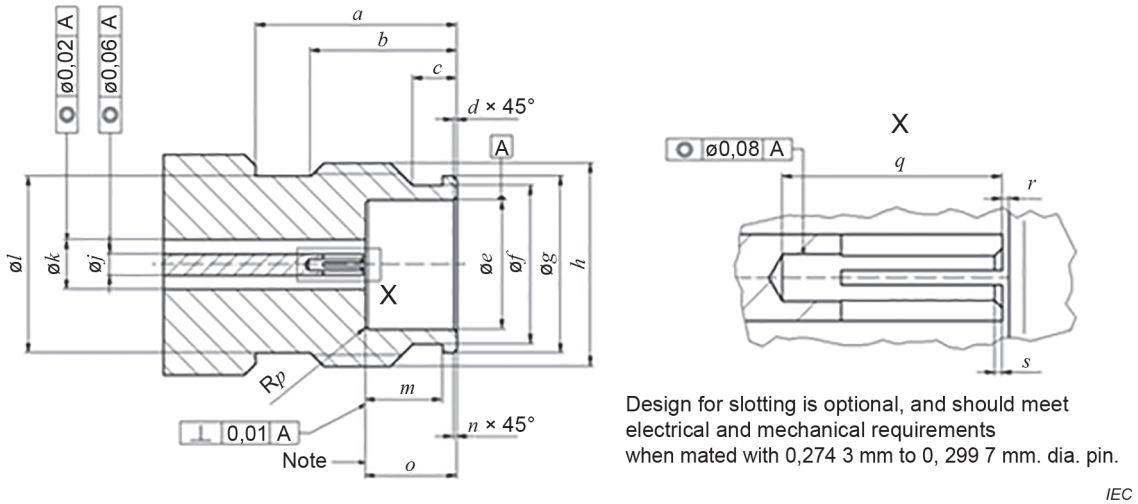

Figure 2 – General purpose connector with socket centre contact

Table 2 – Dimensions of connector with socket centre contact – Grade 1

Ref.	mm		Remarks
	Min.	Max.	
a	5,500	-	
b	4,000	-	
c	1,200	1,500	
d	0,050	0,150	Chamfer
e	3,500	3,550	Diameter
f	4,200	4,300	Diameter
g	4,800	4,840	Diameter
h	M5,5x0,5-6g		Thread
j	0,576	0,596	Diameter
k	1,335	1,365	Diameter
l	-	4,800	Diameter
m	2,100	2,200	
n	0,050	0,150	Chamfer
o	2,400	2,500	
p	0,000	0,100	Radius
q	1,500		
r	0,003	0,050	
s	0,050	0,060	Chamfer, alternatively radius
NOTE Mechanical and electrical reference plane.			

Documents
Document Sharing Hub
Full document details: IEC 61169-65-2021

4.2 Gauge pin for socket centre contact

4.2.1 Dimensions

The gauge pin for socket centre contact is shown in Figure 3 and the dimensions are given as Table 3.

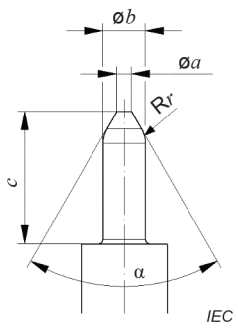

Figure 3 – Gauge pin for socket centre contact

Table 3 – Dimensions of gauge pin for socket centre contact

	Gauge A for sizing purposes		Gauge B for measurement of retention force	
Ref.	mm (°)		mm (°)	
	Min.	Max.	Min.	Max.
a	0,100	0,150	0,100	0,150
b	0,300	0,303	0,270	0,273
c	0,900	1,100	0,900	1,100
α	58°	62°	58°	62°
r	0,200	0,300	0,200	0,300
Material: Steel, polished, surface roughness: Ra = 0,2 µm to 0,4 µm.				

4.2.2 Test procedure

Test procedure is as follows:

a) Sizing test

Gauge A shall be completely inserted in the socket centre contact three times.

b) Insertion test

The insertion force for inserting gauge A after the sizing procedure shall not exceed 1,3 N.

c) Retention test

After the sizing test, gauge B shall be inserted into the socket centre contact. The resilient socket centre contact shall introduce a minimum retention force of 0,14 N on gauge B.

4.3 Dimensions standard test connectors – Grade 0

4.3.1 Standard test connector with pin centre contact

The mating face of the standard test connector with pin centre contact is shown in Figure 4 and the dimensions are given in Table 4.

Documents
Document Sharing Hub
Full document details: IEC 61169-65-2021

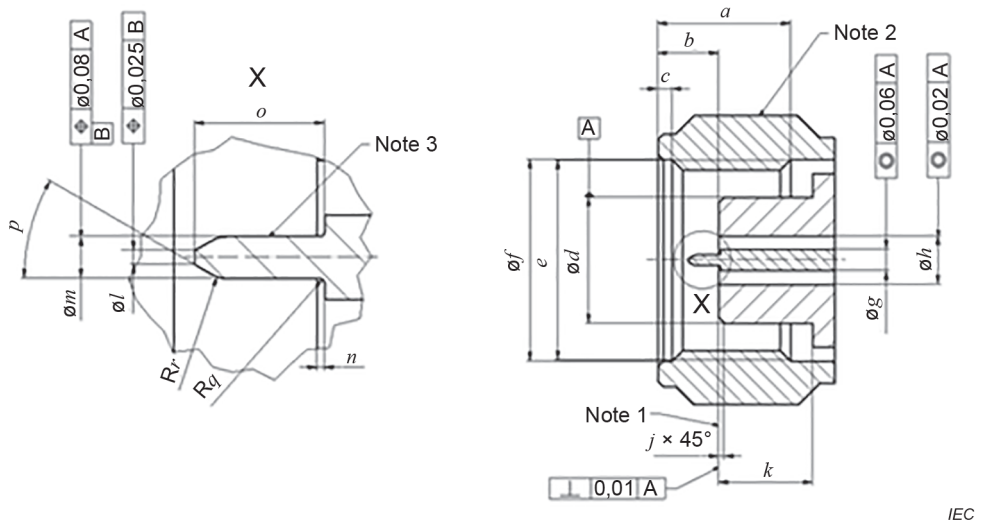

Figure 4 – Standard test connector with pin centre contact

Table 4 – Dimensions of connector with pin centre contact – Grade 0

Ref.	mm (°)		Remarks
	Min.	Max.	
a	3,700	4,000	
b	1,600	2,100	
c	0,300	0,500	
d	3,480	3,490	Diameter
e	M5,5x0,5-6H		Thread
f	5,700	5,800	Diameter
g	0,584	0,588	Diameter
h	1,347	1,353	Diameter
j	0,200	0,250	Chamfer
k	2,600	2,700	
l	0,100	0,150	Diameter
m	0,287	0,293	Diameter
n	0,003	0,020	
o	0,900	1,100	
p	30°nom.		
q	0,000	0,030	Radius
r	0,200	0,300	Radius
NOTE 1 Mechanical and electrical reference plane. NOTE 2 Spanner flat size 8, alternatively flat size 7 or ¼” for special applications. NOTE 3 Surface roughness Ra < 0,4 µm.			

4.3.2 Standard test connector with socket centre contact

The mating face of the standard test connector with socket centre contact is shown in Figure 5 and its dimensions are given in Table 5.

AVA Documents
Document Sharing Hub
Full document details: IEC 61169-65-2021

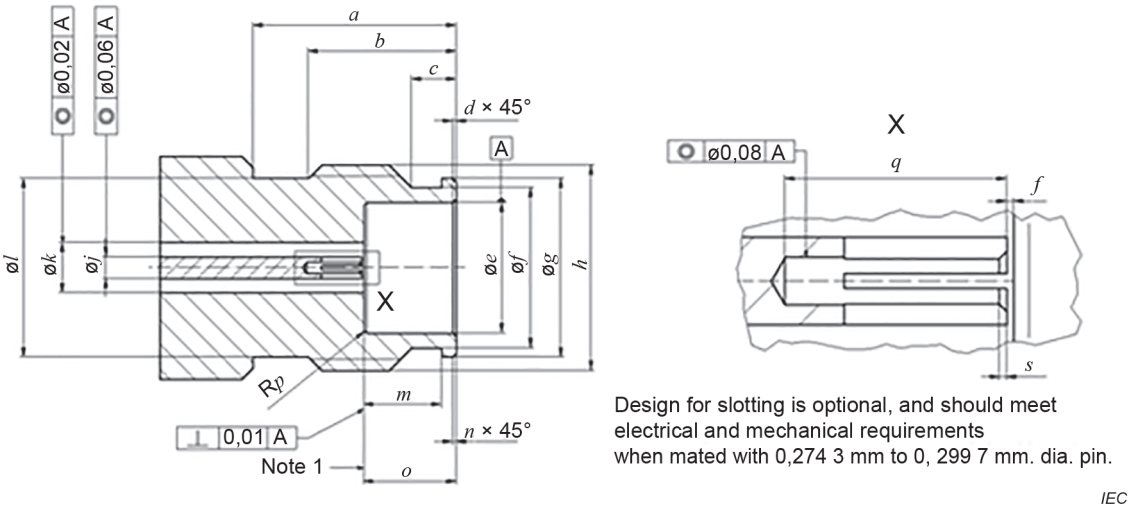

Figure 5 – Standard test connector with socket centre contact

Table 5 – Dimensions of connector with socket centre contact – Grade 0

Ref.	Mm		Remarks
	Min.	Max.	
a	5,500	-	
b	4,000	-	
c	1,200	1,500	
d	0,050	0,150	Chamfer
e	3,500	3,520	Diameter
f	4,200	4,300	Diameter
g	4,800	4,840	Diameter
h	M5,5x0,5-6g		Thread
j	0,584	0,588	Diameter
k	1,347	1,353	Diameter
l	-	4,800	Diameter
m	2,100	2,200	
n	0,050	0,150	Chamfer
o	2,400	2,500	
p	0,000	0,100	Radius
q	1,500		
r	0,003	0,020	
s	0,050	0,060	Chamfer, alternatively radius
NOTE Mechanical and electrical reference plane.			

Documents
Document Sharing Hub
Full document details: IEC 61169-65-2021

5 Quality assessment procedures

5.1 General

Subclauses 5.1 to 5.4 provide rating, performance and test conditions to be considered when writing a detail specification. They also provide an appropriate schedule of tests with minimum levels of conformance inspection sampling.

5.2 Ratings and characteristics (see Clause 5 of IEC 61169-1:2013)

The values indicated below are recommended for 1,35 mm series RF coaxial connectors and are given for the writer of the detail specification. They are applicable for the condition when the connectors are fully mated.

Certain tests will usually not be required. When these tests are required, appropriate values shall be entered in the detail specification at the discretion of the specification writer.

Ratings and characteristics are given in Table 6.

Table 6 – Ratings and characteristics

Ratings and characteristics	IEC 61169-1:2013 Subclause	Value	Remarks including any deviations from standard test methods
Electrical			
Nominal impedance		50 Ω	
Frequency range		DC to 90 GHz	
Return loss	9.2.1		
– interface only		–34 dB min –26 dB min –23,7 dB min	DC to 26,5 GHz >26,5 GHz to 65 GHz >65 GHz to 90 GHz
Power rating [a]	9.2.2	3,5 W at 90 GHz	
Centre contact resistance	9.2.3		
– initial		≤4 mΩ	
– after conditioning		≤10 mΩ	
Outer conductor resistance [a]	9.2.3		
– initial		≤1 mΩ	
– after conditioning		≤2 mΩ	
Insulation resistance [a]	9.2.5	≥5 GΩ	
Proof voltage at sea level [b]	9.2.6	500 V	86 kPa to 106 kPa
Proof voltage at 4,4 kPa [b]	9.2.6	100 V	4,4 kPa approximately equivalent to 20 km altitude
Environmental test voltage at sea level	9.2.6	150 V	86 kPa to 106 kPa
Screening effectiveness	9.2.7	≥90 dB	
Discharge test (corona effect)	9.2.8	na	
Intermodulation level (PIM)	9.2.9 IEC 62037	na	
Mechanical			
Centre contact captivation	9.3.5		
– axial force		10 N	

Documents
Document Sharing Hub
Full document details: IEC 61169-65-2021

Ratings and characteristics	IEC 61169-1:2013 Subclause	Value	Remarks including any deviations from standard test methods
Coupling torque	9.3.6	≥0,9 N m ±0,1 N m	
Proof torque		1,65 N m	
Tensile strength of coupling mechanism	9.3.11	≥300 N	
Vibration	9.3.3	98 m/s^2 10 Hz to 2 000 Hz	10 g acceleration
Shock	9.3.14	490 m/s^2 ½ sin 11 ms	50 g acceleration
Environmental			
Climatic category		55/125/21	
Endurance			
– mechanical	9.3.15	>3 000 operations	
[a] Value for a single pair of mated connectors. [b] Voltage values are RMS values at 40 Hz to 60 Hz, unless otherwise specified.			

5.3 Test schedule and inspection requirements

5.3.1 Acceptance tests

There are no group C tests for levels H and M.

Table 7 describes the acceptance tests to be performed.

Table 7 – Acceptance tests

	IEC 61169-1: 2013 Subclause	Assessment level M (higher)				Assessment level H (lower)			
		Test required	IL	AQL %	Period	Test required	IL	AQL %	Period
Group A1									
Visual examination	9.1.1	a	II	1		a	S3	1,5	
Group B2									
Outline dimensions	9.1.2	a	S4	0,4		a	S3	4	
Mechanical compatibility	9.1.2.2	a	II	1	Lot	a	S3	1,5	Lot
Engagement and separation forces and torques	9.3.6	a	S4	0,4	by	a	S3	1,5	by
Insertion force (resilient contacts)	9.3.4	ia	II	1		ia	S3	1,5	
Centre contact captivation	9.3.5	ia	II	1	lot	ia	S3	1,5	lot
Sealing non-hermetic sealed connectors	9.4.7	ia	II	0,65		ia	S3	1	
Hermetically sealed connectors	9.4.8	ia	II	0,015		ia	S3	0,025	

AVA Documents
Document Sharing Hub
Full document details: IEC 61169-65-2021

	IEC 61169-1: 2013 Subclause	Assessment level M (higher)				Assessment level H (lower)			
		Test required	IL	AQL %	Period	Test required	IL	AQL %	Period
Water immersion test	9.4.9	na		0,015		na	S3	0,025	
Voltage proof	9.2.6	a	II	0,4		a	II	4	
Solderability(d)	9.3.2.2	ia	S4	0,4		ia	S3	4	
Insulation resistance	9.2.5	a	S4	0,4		a	S3	4	
Safety wire hole pull-out bending moment (and shearing force); piece-parts(d)	9.3.12	ia	S4	0,4		ia	S3	4	
For the symbols, abbreviations and procedures, see the end of Table 8.									

5.3.2 Periodic tests

Table 8 describes the periodic tests to be performed.

Table 8 – Periodic tests

	IEC 61169-1: 2013 Subclause	Assessment level M (higher)				Assessment level H (lower)			
		Test required	Number of specimens	Permitted failures per group1#	Period	Test required	Number of specimens	Permitted failures per group1#	Period
Group D1 (d)			6	1	3 years		3	1	3 years
Solderability	9.3.2.2	ia				ia			
Resistance to soldering heat	9.3.2.3	ia				ia			
Effectiveness of clamping device against cable rotation (nutation of cable end)	9.3.7	na				na			
Effectiveness of clamping device against cable pulling	9.3.8	ia				ia			
Effectiveness of clamping device against cable bending	9.3.9	ia				ia			
Effectiveness of clamping device against cable torsion	9.3.10	ia				ia			
Group D2 (d)			6	1	3 years		3	1	3 years
Contact resistance, outer conductor and centre conductor continuity	9.2.3	a				a			
Vibration	9.3.3	a				ia			

AVA Documents Document Sharing Hub

Full document details: IEC 61169-65-2021