IEC 61169-69

Edition 1.0 2024-06

INTERNATIONAL STANDARD

NORME INTERNATIONALE

Radio-frequency connectors – Part 69: Sectional specification for RF coaxial connectors with push on mating – Characteristic impedance 50 Ω (type SMP3)

Connecteurs pour fréquences radioélectriques – Partie 69: Spécification intermédiaire relative aux connecteurs coaxiaux pour fréquences radioélectriques à accouplement par poussée – Impédance caractéristique 50 Ω (type SMP3)

IEC 61169-69:2024-06(en-fr)

Documents
Document Sharing Hub
Full document details: IEC 61169-69-2024

THIS PUBLICATION IS COPYRIGHT PROTECTED
Copyright © 2024 IEC, Geneva, Switzerland

All rights reserved. Unless otherwise specified, no part of this publication may be reproduced or utilized in any form or by any means, electronic or mechanical, including photocopying and microfilm, without permission in writing from either IEC or IEC's member National Committee in the country of the requester. If you have any questions about IEC copyright or have an enquiry about obtaining additional rights to this publication, please contact the address below or your local IEC member National Committee for further information.

Droits de reproduction réservés. Sauf indication contraire, aucune partie de cette publication ne peut être reproduite ni utilisée sous quelque forme que ce soit et par aucun procédé, électronique ou mécanique, y compris la photocopie et les microfilms, sans l'accord écrit de l'IEC ou du Comité national de l'IEC du pays du demandeur. Si vous avez des questions sur le copyright de l'IEC ou si vous désirez obtenir des droits supplémentaires sur cette publication, utilisez les coordonnées ci-après ou contactez le Comité national de l'IEC de votre pays de résidence.

IEC Secretariat
3, rue de Varembé
CH-1211 Geneva 20
Switzerland

Tel.: +41 22 919 02 11
info@iec.ch
www.iec.ch

About the IEC
The International Electrotechnical Commission (IEC) is the leading global organization that prepares and publishes International Standards for all electrical, electronic and related technologies.

About IEC publications
The technical content of IEC publications is kept under constant review by the IEC. Please make sure that you have the latest edition, a corrigendum or an amendment might have been published.

IEC publications search - webstore.iec.ch/advsearchform
The advanced search enables to find IEC publications by a variety of criteria (reference number, text, technical committee, …). It also gives information on projects, replaced and withdrawn publications.

IEC Just Published - webstore.iec.ch/justpublished
Stay up to date on all new IEC publications. Just Published details all new publications released. Available online and once a month by email.

IEC Customer Service Centre - webstore.iec.ch/csc
If you wish to give us your feedback on this publication or need further assistance, please contact the Customer Service Centre: sales@iec.ch.

IEC Products & Services Portal - products.iec.ch
Discover our powerful search engine and read freely all the publications previews, graphical symbols and the glossary. With a subscription you will always have access to up to date content tailored to your needs.

Electropedia - www.electropedia.org
The world's leading online dictionary on electrotechnology, containing more than 22 500 terminological entries in English and French, with equivalent terms in 25 additional languages. Also known as the International Electrotechnical Vocabulary (IEV) online.

A propos de l'IEC
La Commission Electrotechnique Internationale (IEC) est la première organisation mondiale qui élabore et publie des Normes internationales pour tout ce qui a trait à l'électricité, à l'électronique et aux technologies apparentées.

A propos des publications IEC
Le contenu technique des publications IEC est constamment revu. Veuillez vous assurer que vous possédez l'édition la plus récente, un corrigendum ou amendement peut avoir été publié.

Recherche de publications IEC - webstore.iec.ch/advsearchform
La recherche avancée permet de trouver des publications IEC en utilisant différents critères (numéro de référence, texte, comité d'études, …). Elle donne aussi des informations sur les projets et les publications remplacées ou retirées.

IEC Just Published - webstore.iec.ch/justpublished
Restez informé sur les nouvelles publications IEC. Just Published détaille les nouvelles publications parues. Disponible en ligne et une fois par mois par email.

Service Clients - webstore.iec.ch/csc
Si vous désirez nous donner des commentaires sur cette publication ou si vous avez des questions contactez-nous: sales@iec.ch.

IEC Products & Services Portal - products.iec.ch
Découvrez notre puissant moteur de recherche et consultez gratuitement tous les aperçus des publications, symboles graphiques et le glossaire. Avec un abonnement, vous aurez toujours accès à un contenu à jour adapté à vos besoins.

Electropedia - www.electropedia.org
Le premier dictionnaire d'électrotechnologie en ligne au monde, avec plus de 22 500 articles terminologiques en anglais et en français, ainsi que les termes équivalents dans 25 langues additionnelles. Egalement appelé Vocabulaire Electrotechnique International (IEV) en ligne.

Documents
Document Sharing Hub

Full document details: IEC 61169-69-2024

IEC 61169-69

Edition 1.0 2024-06

INTERNATIONAL STANDARD

NORME INTERNATIONALE

Radio-frequency connectors – Part 69: Sectional specification for RF coaxial connectors with push on mating – Characteristic impedance 50 Ω (type SMP3)

Connecteurs pour fréquences radioélectriques – Partie 69: Spécification intermédiaire relative aux connecteurs coaxiaux pour fréquences radioélectriques à accouplement par poussée – Impédance caractéristique 50 Ω (type SMP3)

INTERNATIONAL
ELECTROTECHNICAL
COMMISSION

COMMISSION
ELECTROTECHNIQUE
INTERNATIONALE

ICS 33.060

ISBN 978-2-8322-8739-2

Warning! Make sure that you obtained this publication from an authorized distributor.
Attention! Veuillez vous assurer que vous avez obtenu cette publication via un distributeur agréé.

® Registered trademark of the International Electrotechnical Commission
Marque déposée de la Commission Electrotechnique Internationale

Documents
Document Sharing Hub

Full document details: IEC 61169-69-2024

CONTENTS

FOREWORD 4
1 Scope 6
2 Normative references 6
3 Terms and definitions 6
4 Mating face and gauge information 7
4.1 Dimensions – General connectors – Grade 2 7
4.1.1 SMP3 connector with pin-centre contact 7
4.1.2 SMP3 connector with socket-centre contact 8
4.2 SMP3 gauges 10
4.2.1 SMP3 gauge pin for socket-centre contact 10
4.2.2 Gauges for outer contact of SMP3 connector with socket-centre contact 11
5 Quality assessment procedure 20
5.1 General 20
5.2 Rating and characteristics (see IEC 61169-1:2013, Clause 5) 20
5.3 Test schedule and inspection requirements 23
5.3.1 Acceptance tests 23
5.3.2 Periodic tests 24
5.4 Procedures for the quality conformance 25
5.4.1 Quality conformance inspection 25
5.4.2 Quality conformance and its maintenance 25
6 Instructions for preparation of detail specifications (DS) 26
6.1 General 26
6.2 Identification of the component 26
6.3 Performances 26
6.4 Marking, ordering information and related matters 26
6.5 Selection of tests, test conditions and severities 27
6.6 Blank detail specification pro-forma for type SMP3 connector 27
7 Marking 31
7.1 Marking of component 31
7.2 Marking and contents of package 32

Figure 1 – SMP3 connector with pin-centre contact – Full detent 7
Figure 2 – SMP3 connector with pin-centre contact – Smooth bore 8
Figure 3 – SMP3 connector with socket-centre contact 9
Figure 4 – SMP3 gauge pin for socket-centre contact 10
Figure 5 – SMP3 engagement force gauge – Full detent 11
Figure 6 – SMP3 separation force gauge – Full detent 13
Figure 7 – SMP3 engagement force gauge – Smooth bore 15
Figure 8 – SMP3 Separation force gauge – Smooth bore 17
Figure 9 – SMP3 gauge block 19

Table 1 – Dimensions of SMP3 connector with pin-centre contact – Full detent 7
Table 2 – Dimensions of SMP3 connector with pin-centre contact – Smooth bore 9

AVA Documents
Document Sharing Hub
Full document details: IEC 61169-69-2024

Table 3 – Dimensions of SMP3 connector with socket-centre contact 9
Table 4 – Dimensions of SMP3 gauge pin for socket-centre contact 10
Table 5 – Dimensions of SMP3 engagement force gauge – Full detent 12
Table 6 – Dimensions of SMP3 separation force gauge – Full detent 14
Table 7 – Dimensions of SMP3 engagement force gauge – Smooth bore 16
Table 8 – Dimensions of SMP3 separation force gauge – Smooth bore 18
Table 9 – Dimensions of SMP3 gauge block 19
Table 10 – Preferred climatic categories 20
Table 11 – Rating and characteristics 21
Table 12 – Acceptance tests 23
Table 13 – Periodic tests 24

Documents
Document Sharing Hub
Full document details: IEC 61169-69-2024

INTERNATIONAL ELECTROTECHNICAL COMMISSION

RADIO-FREQUENCY CONNECTORS –

Part 69: Sectional specification for RF coaxial connectors with push on mating – Characteristic impedance 50 Ω (type SMP3)

FOREWORD

1) The International Electrotechnical Commission (IEC) is a worldwide organization for standardization comprising all national electrotechnical committees (IEC National Committees). The object of IEC is to promote international co-operation on all questions concerning standardization in the electrical and electronic fields. To this end and in addition to other activities, IEC publishes International Standards, Technical Specifications, Technical Reports, Publicly Available Specifications (PAS) and Guides (hereafter referred to as "IEC Publication(s)"). Their preparation is entrusted to technical committees; any IEC National Committee interested in the subject dealt with may participate in this preparatory work. International, governmental and non-governmental organizations liaising with the IEC also participate in this preparation. IEC collaborates closely with the International Organization for Standardization (ISO) in accordance with conditions determined by agreement between the two organizations.
2) The formal decisions or agreements of IEC on technical matters express, as nearly as possible, an international consensus of opinion on the relevant subjects since each technical committee has representation from all interested IEC National Committees.
3) IEC Publications have the form of recommendations for international use and are accepted by IEC National Committees in that sense. While all reasonable efforts are made to ensure that the technical content of IEC Publications is accurate, IEC cannot be held responsible for the way in which they are used or for any misinterpretation by any end user.
4) In order to promote international uniformity, IEC National Committees undertake to apply IEC Publications transparently to the maximum extent possible in their national and regional publications. Any divergence between any IEC Publication and the corresponding national or regional publication shall be clearly indicated in the latter.
5) IEC itself does not provide any attestation of conformity. Independent certification bodies provide conformity assessment services and, in some areas, access to IEC marks of conformity. IEC is not responsible for any services carried out by independent certification bodies.
6) All users should ensure that they have the latest edition of this publication.
7) No liability shall attach to IEC or its directors, employees, servants or agents including individual experts and members of its technical committees and IEC National Committees for any personal injury, property damage or other damage of any nature whatsoever, whether direct or indirect, or for costs (including legal fees) and expenses arising out of the publication, use of, or reliance upon, this IEC Publication or any other IEC Publications.
8) Attention is drawn to the Normative references cited in this publication. Use of the referenced publications is indispensable for the correct application of this publication.
9) IEC draws attention to the possibility that the implementation of this document may involve the use of (a) patent(s). IEC takes no position concerning the evidence, validity or applicability of any claimed patent rights in respect thereof. As of the date of publication of this document, IEC had not received notice of (a) patent(s), which may be required to implement this document. However, implementers are cautioned that this may not represent the latest information, which may be obtained from the patent database available at https://patents.iec.ch. IEC shall not be held responsible for identifying any or all such patent rights.

IEC 61169-69 has been prepared by subcommittee 46F: RF and microwave passive components, of IEC technical committee 46: Cables, wires, waveguides, RF connectors, RF and microwave passive components and accessories. It is an International Standard.

The text of this International Standard is based on the following documents:

Draft	Report on voting
46F/666/FDIS	46F/671/RVD

Full information on the voting for its approval can be found in the report on voting indicated in the above table.

The language used for the development of this International Standard is English.

Documents
Document Sharing Hub

This document was drafted in accordance with ISO/IEC Directives, Part 2, and developed in accordance with ISO/IEC Directives, Part 1 and ISO/IEC Directives, IEC Supplement, available at www.iec.ch/members_experts/refdocs. The main document types developed by IEC are described in greater detail at www.iec.ch/publications.

A list of all parts of the IEC 61169 series, under the general title: *Radio-frequency connectors*, can be found on the IEC website.

The committee has decided that the contents of this document will remain unchanged until the stability date indicated on the IEC website under webstore.iec.ch in the data related to the specific document. At this date, the document will be

- reconfirmed,
- withdrawn, or
- revised.

Documents
Document Sharing Hub

Full document details: IEC 61169-69-2024

RADIO-FREQUENCY CONNECTORS –

Part 69: Sectional specification for RF coaxial connectors with push on mating – Characteristic impedance 50 Ω (type SMP3)

1 Scope

This part of IEC 61169, which is a sectional specification (SS), provides information and rules for the preparation of detail specifications (DS) for RF coaxial connectors with push-on coupling, typically for use in 50 Ω RF cables or micro-strips in microwave, telecommunication, wireless systems, and other fields (SMP3).

It specifies mating face dimensions for general purpose connectors – grade 2, dimensional details of standard test connectors-grade 0, gauging information and tests selected from IEC 61169-1, applicable to all detail specifications relating to series SMP3 RF connectors.

This specification indicates recommended performance characteristics to be considered when writing a detail specification and it covers test schedules and inspection requirements for assessment levels M and H.

The SMP3 push-on coupling structure series RF coaxial connectors with the characteristic of normative impedance 50 Ω are used with various kinds of RF cables or micro-strips in microwave, telecommunication, wireless systems, and other fields. The operating frequency limit is up to 65 GHz.

NOTE Imperial dimensions are the original dimensions since this is a very miniature RF connector. There is a concern that conversion to the metric system could lead to rounding errors which can lead to performance degradation from the original imperial design. The SMPM connector was released as an imperial design for this reason. All undimensioned pictorial information is for reference only.

2 Normative references

The following documents are referred to in the text in such a way that some or all of their content constitutes requirements of this document. For dated references, only the edition cited applies. For undated references, the latest edition of the referenced document (including any amendments) applies.

IEC 61169-1:2013, *Radio frequency connectors – Part 1: Generic specification – General requirements and measuring methods*

IEC 60068-1, *Environmental testing – Part 1: General and guidance*

3 Terms and definitions

No terms and definitions are listed in this document.

ISO and IEC maintain terminology databases for use in standardization at the following addresses:

- IEC Electropedia: available at https://www.electropedia.org/
- ISO Online browsing platform: available at https://www.iso.org/obp

Documents
Document Sharing Hub

Full document details: IEC 61169-69-2024

4 Mating face and gauge information

4.1 Dimensions – General connectors – Grade 2

4.1.1 SMP3 connector with pin-centre contact

4.1.1.1 SMP3 connector with pin-centre contact – Full detent

Figure 1 shows an SMP3 connector with pin-centre contactor – Full detent.

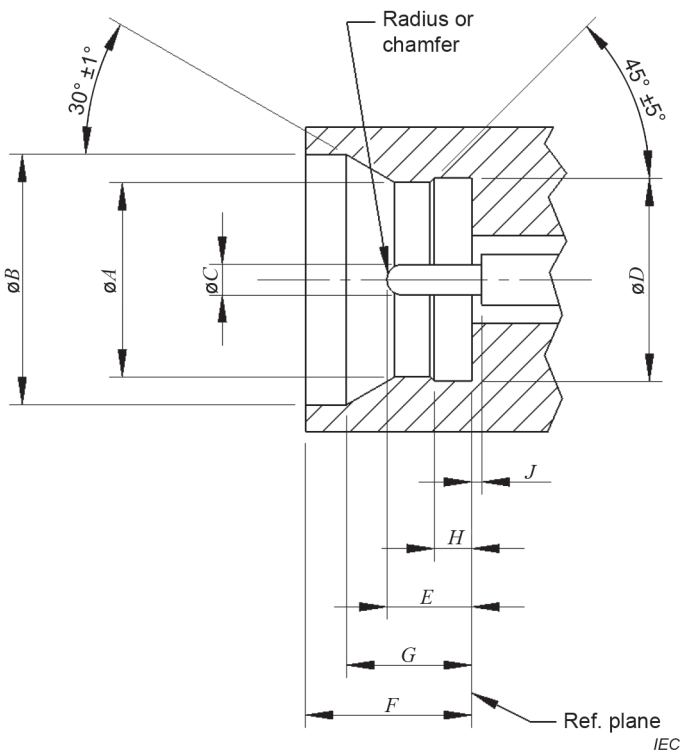

NOTE For dimensions, see Table 1.

Figure 1 – SMP3 connector with pin-centre contact – Full detent

Table 1 – Dimensions of SMP3 connector with pin-centre contact – Full detent

Ref.	Inches (millimetres)		Remarks
	Min.	Max.	
A	0,057 (1,448)	0,058 (1,473)	
B	0,073 (1,854)	0,075 (1,905)	
C	0,008 5 (0,216)	0,009 5 (0,241)	
D	0,059 (1,499)	0,061 (1,549)	
E	0,020 (0,508)	0,030 (0,762)	
F	0,048 (1,219)	0,050 (1,270)	
G	0,033 (0,838)	0,041 (1,041)	
H	0,010 (0,254)	0,012 (0,305)	
J	0,000 (0,000)	-	

Documents
Document Sharing Hub
Full document details: IEC 61169-69-2024

4.1.1.2 SMP3 connector with pin-centre contact – Smooth bore

Figure 2 shows a SMP3 connector with pin-centre contact – Smooth bore.

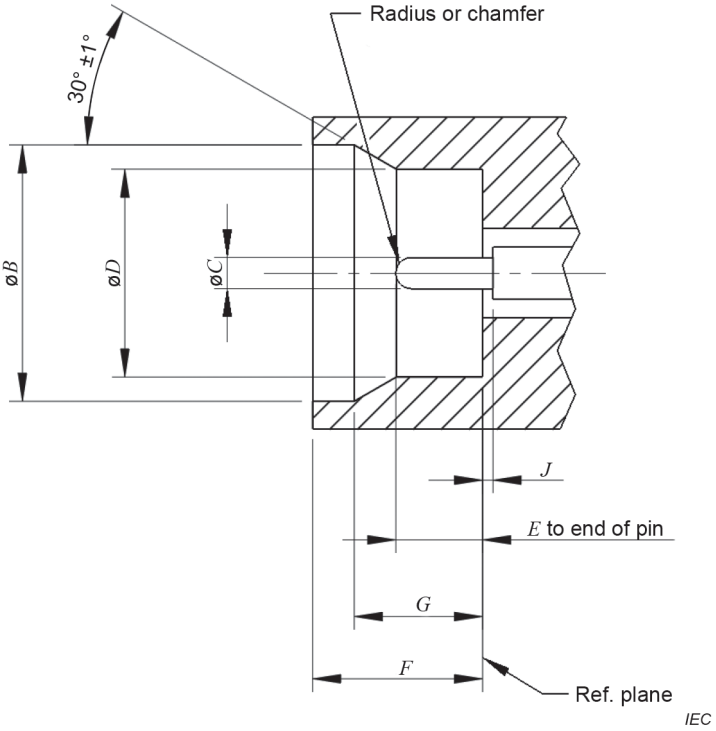

NOTE For dimensions, see Table 2.

Figure 2 – SMP3 connector with pin-centre contact – Smooth bore

Table 2 – Dimensions of SMP3 connector with pin-centre contact – Smooth bore

Ref.	Inches (millimetres)		Remarks
	Min.	Max.	
B	0,073 (1,854)	0,075 (1,905)	
C	0,008 5 (0,216)	0,009 5 (0,241)	
D	0,059 (1,499)	0,061 (1,549)	
E	0,020 (0,508)	0,030 (0,762)	
F	0,048 (1,219)	0,050 (1,270)	
G	0,033 (0,838)	0,041 (1,041)	
J	0,000 (0,000)	-	

4.1.2 SMP3 connector with socket-centre contact

Figure 3 shows a SMP3 connector with socket-centre contact.

Documents
Document Sharing Hub
Full document details: IEC 61169-69-2024

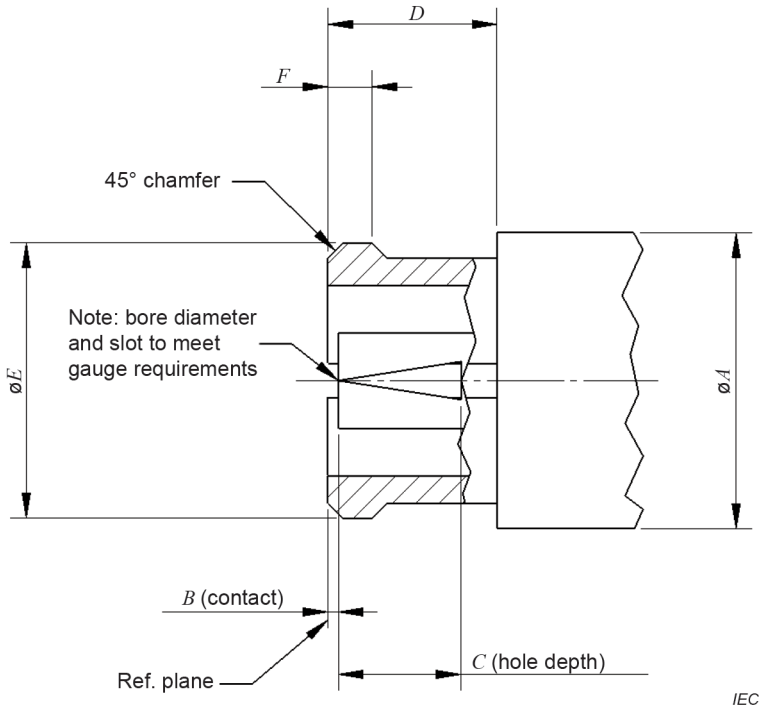

Requirements:

Features shall meet the mechanical / electrical requirements when mated with connector with pin-centre contact.

NOTE For dimensions, see Table 3.

Figure 3 – SMP3 connector with socket-centre contact

Table 3 – Dimensions of SMP3 connector with socket-centre contact

Ref.	Inches (millimetres)		Remarks
	Min.	Max.	
A	-	0,070 (1,778)	
B	0,000 (0,000)	0,005 (0,127)	
C	0,029 (0,737)	-	
D	0,040 (1,016)	-	
E	-	0,065 (1,651)	
F	-	0,010 5 (0,267)	

Documents
Document Sharing Hub
Full document details: IEC 61169-69-2024

4.2 SMP3 gauges

4.2.1 SMP3 gauge pin for socket-centre contact

4.2.1.1 Mating dimensions for SMP3 pin connector for smooth bore and full detent

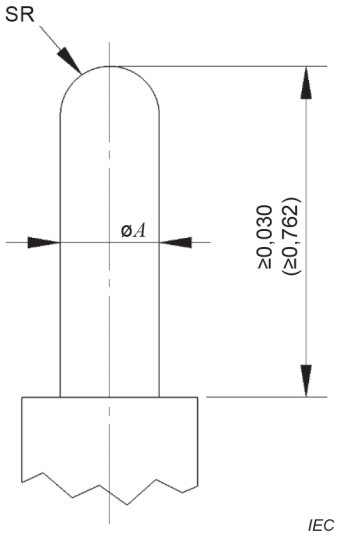

Requirements:

1) Material – 440 stainless steel, hardness 56-60 RC.
2) All surfaces shall be Ra 32 µin (0,8 µm) maximum except the mating surfaces Ø*A* and spherical radius shall be Ra 16 µin (0,4 µm) maximum.

NOTE For dimensions, see Table 4.

Figure 4 – SMP3 gauge pin for socket-centre contact

Table 4 – Dimensions of SMP3 gauge pin for socket-centre contact

Ref.	Gauge A – Oversize		Gauge B – Insertion force		Gauge C – Retention force	
	Inches (millimetres)		Inches (millimetres)		Inches (millimetres)	
	Min.	Max.	Min.	Max.	Min.	Max.
A	0,009 8 (0,249)	0,009 9 (0,251)	0,009 5 (0,241)	0,009 6 (0,244)	0,008 4 (0,213)	0,008 5 (0,216)

4.2.1.2 Test procedure

4.2.1.2.1 Insertion force

Figure 4 oversize gauge A shall be inserted into the socket-centre contact 3 times to a depth of 0,020 in (0,508 mm) to 0,030 in (0,762 mm).

Figure 4 insertion force gauge B shall be inserted into the socket-centre contact to a depth of 0,020 in (0,508 mm) to 0,030 in (0,762 mm). The insertion force measured shall be 3,33 N (12 oz) maximum.

4.2.1.2.2 Retention force

Figure 4 retention force gauge C shall be inserted into the socket-centre contact to a depth of 0,020 in (0,508 mm) to 0,030 in (0,762 mm). The retention (withdrawal) force shall be 0,035 N (0,125 oz) minimum.

AVA Documents
Document Sharing Hub
Full document details: IEC 61169-69-2024

4.2.2 Gauges for outer contact of SMP3 connector with socket-centre contact

4.2.2.1 Engagement force gauge – Full detent for outer contact of SMP3 connector with socket-centre

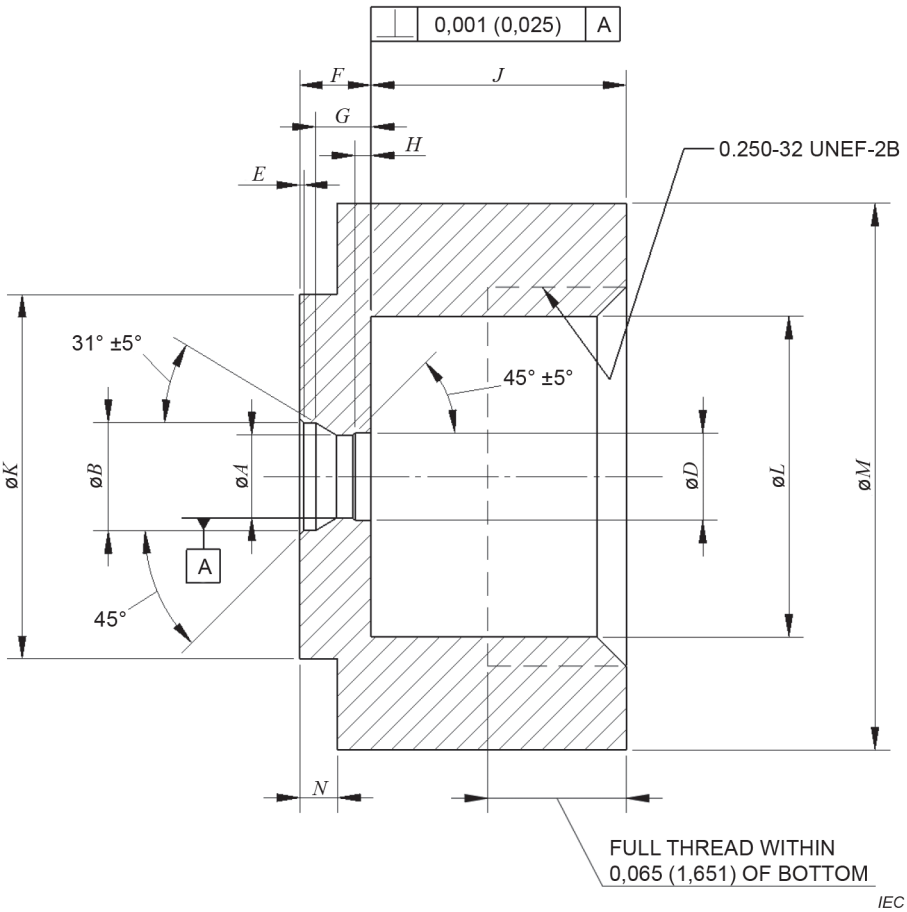

Requirements:

1) Material – 440 stainless steel, hardness 56-60 RC.
2) Break corners and edges 0,005 in (0,127 mm) R. max. except Ø*A* feature shall be 0,001 in (0,025 mm) R. max.
3) Remove all burrs.
4) All diameters concentric to Datum A within 0,001 in (0,025 mm) T.I.R.
5) All surfaces shall be Ra 32 µin (0,8 µm) maximum except the mating surfaces 31,0° ± 5°, Ø*A*, 45°± 5°, and Ø*D* shall be Ra 16 µin (0,4 µm) maximum.
6) Chamfer first thread.
7) No lubricant allowed.

NOTE For dimensions, see Table 5.

Figure 5 – SMP3 engagement force gauge – Full detent

Documents
Document Sharing Hub
Full document details: IEC 61169-69-2024

Table 5 – Dimensions of SMP3 engagement force gauge – Full detent

Ref.	Inches (millimetres)		Remarks
	Min.	Max.	
A	0,056 9 (1,445)	0,057 1 (1,450)	
B	0,073 (1,854)	0,075 (1,905)	
D	0,059 (1,499)	0,061 (1,549)	
E	0,002 (0,051)	0,004 (0,102)	
F	0,048 (1,219)	0,050 (1,270)	
G	0,033 (0,838)	0,041 (1,041)	
H	0,010 (0,254)	0,012 (0,305)	
J	0,170 (4,318)	0,180 (4,572)	
K	0,245 (6,223)	0,255 (6,477)	
L	0,217 (5,512)	0,223 (5,664)	
M	0,370 (9,398)	0,380 (9,652)	
N	0,021 (0,533)	0,031 (0,787)	

4.2.2.2 Test procedure

The force gauge shall be threaded onto the Figure 9 SMP3 gauge block and torqued to prevent loosening of the thread during force measurement.

Figure 5 engagement force gauge – full detent shall be fully mated 5 times with the outer contact of the connector. The engagement force shall be measured on the insertion of the fifth mating cycle. The engagement force shall be 17,8 N (4 lbs) maximum.

Documents
Document Sharing Hub
Full document details: IEC 61169-69-2024

4.2.2.3 Separation force gauge – Full detent for outer contact of SMP3 connector with socket-centre

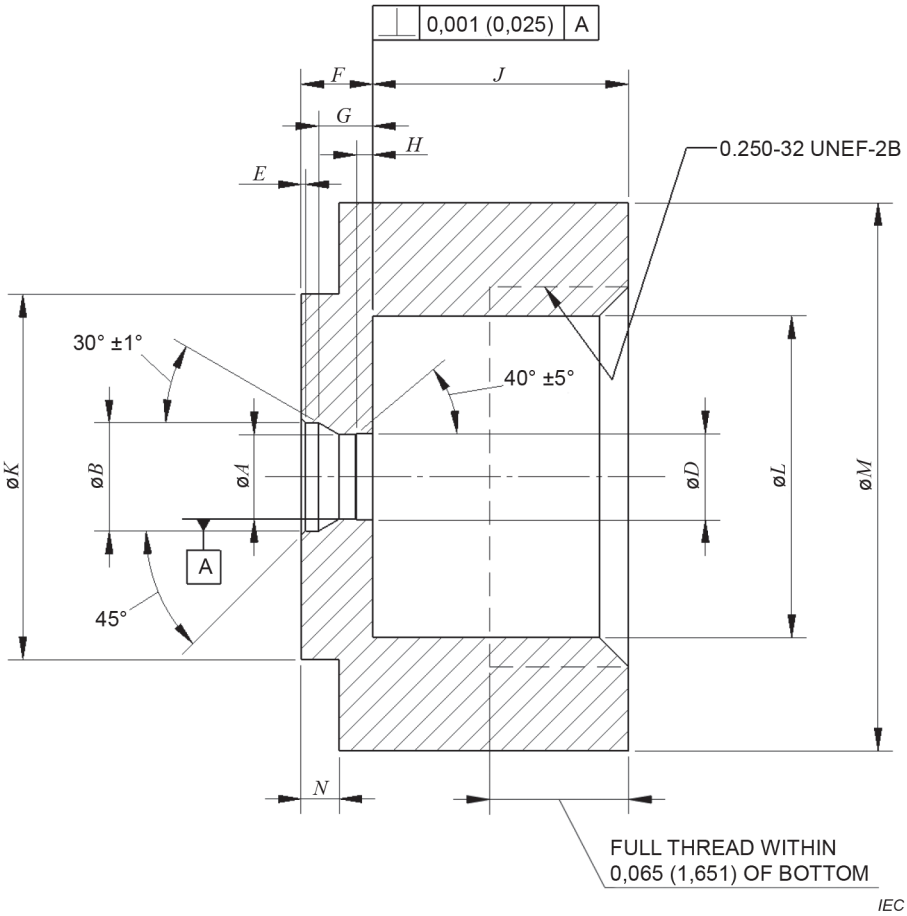

Requirements:

1) Material – 440 stainless steel, hardness 56-60 RC.
2) Break corners and edges 0,005 in (0,127 mm) R. max. except Ø*A* feature shall be 0,001 in (0,025 mm) R. max.
3) Remove all burrs.
4) All diameters concentric to Datum A within 0,001 in (0,025 mm) T.I.R.
5) All surfaces shall be Ra 32 µin (0,8 µm) maximum except the mating surfaces 30,0° ± 1°, Ø*A*, 40° ± 5°, and Ø*D* shall be Ra 16 µin (0,4 µm) maximum.
6) Chamfer first thread.
7) No lubricant allowed.

NOTE For dimensions, see Table 6.

Figure 6 – SMP3 separation force gauge – Full detent

Documents
Document Sharing Hub
Full document details: IEC 61169-69-2024

Table 6 – Dimensions of SMP3 separation force gauge – Full detent

Ref.	Inches (millimetres)		Remarks
	Min.	Max.	
A	0,057 9 (1,471)	0,058 1 (1,476)	
B	0,073 (1,854)	0,075 (1,905)	
D	0,058 9 (1,496)	0,059 1 (1,501)	
E	0,002 (0,051)	0,004 (0,102)	
F	0,048 (1,219)	0,050 (1,270)	
G	0,033 (0,838)	0,041 (1,041)	
H	0,010 (0,254)	0,012 (0,305)	
J	0,170 (4,318)	0,180 (4,572)	
K	0,245 (6,223)	0,255 (6,477)	
L	0,217 (5,512)	0,223 (5,664)	
M	0,370 (9,398)	0,380 (9,652)	
N	0,021 (0,533)	0,031 (0,787)	

4.2.2.4 Test procedure

The force gauge shall be threaded onto the Figure 9 SMP3 gauge block and torqued to prevent loosening of the thread during force measurement.

Figure 6 separation force gauge – full detent shall be fully mated 5 times with the outer contact of the connector. The separation force shall be measured on the withdrawal of the fifth mating cycle. The separation force shall be 8,90 N (2 lbs) minimum.

Documents
Document Sharing Hub
Full document details: IEC 61169-69-2024

4.2.2.5 Engagement force gauge – Smooth bore for outer contact of SMP3 connector with socket-centre

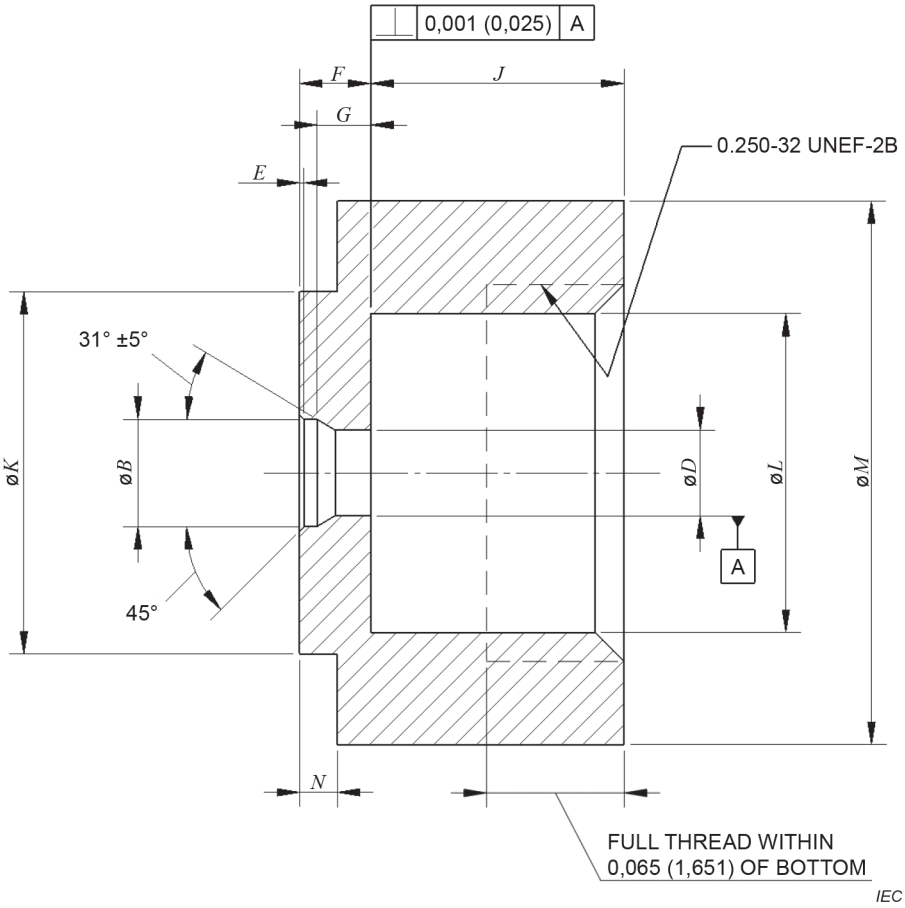

Requirements:

1) Material – 440 stainless steel, hardness 56-60 RC.
2) Break corners and edges 0,005 in (0,127 mm) R. max. except Ø*A* feature shall be 0,001 in (0,025 mm) R. max.
3) Remove all burrs.
4) All diameters concentric to Datum A within 0,001 in (0,025 mm) T.I.R.
5) All surfaces shall be Ra 0,8 µm (32 µin) maximum except the mating surfaces 31,0° ± 5° and Ø*D* shall be Ra 16 µin (0,4 µm) maximum.
6) Chamfer first thread.
7) No lubricant allowed.

NOTE For dimensions, see Table 7.

Figure 7 – SMP3 engagement force gauge – Smooth bore

Documents
Document Sharing Hub
Full document details: IEC 61169-69-2024

Table 7 – Dimensions of SMP3 engagement force gauge – Smooth bore

Ref.	Inches (millimetres)		Remarks
	Min.	Max.	
B	0,073 (1,854)	0,075 (1,905)	
D	0,058 9 (1,496)	0,059 1 (1,501)	
E	0,002 (0,051)	0,004 (0,102)	
F	0,048 (1,219)	0,050 (1,270)	
G	0,033 (0,838)	0,041 (1,041)	
J	0,170 (4,318)	0,180 (4,572)	
K	0,245 (6,223)	0,255 (6,477)	
L	0,217 (5,512)	0,223 (5,664)	
M	0,370 (9,398)	0,380 (9,652)	
N	0,021 (0,533)	0,031 (0,787)	

4.2.2.6 Test procedure

The force gauge shall be threaded onto the Figure 9 SMP3 gauge block and torqued to prevent loosening of the thread during force measurement.

Figure 7 engagement force gauge – smooth bore shall be fully mated 5 times with the outer contact of the connector. The engagement force shall be measured on the insertion of the fifth mating cycle. The engagement force shall be 8,90 N (2 lbs) maximum.

Documents
Document Sharing Hub
Full document details: IEC 61169-69-2024

4.2.2.7 Separation force gauge – Smooth bore for outer contact of SMP3 connector with socket-centre

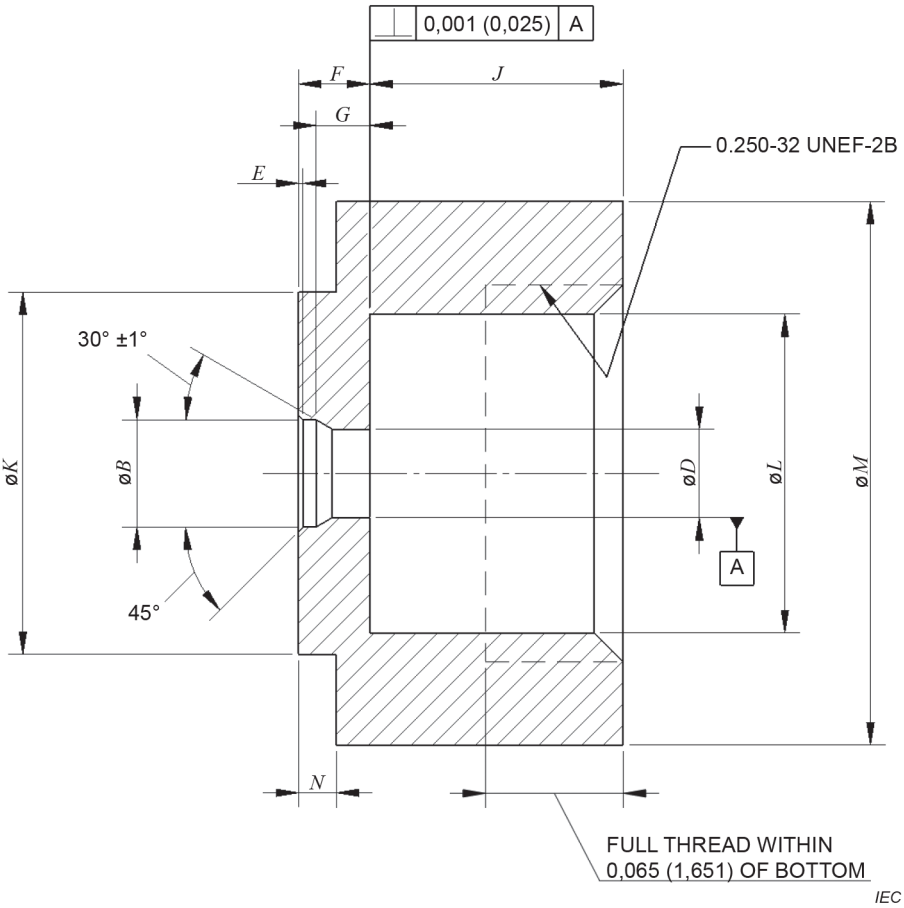

Requirements:

1) Material – 440 stainless steel, hardness 56-60 RC.
2) Break corners and edges 0,005 in (0,127 mm) R. max. except Ø*A* feature shall be 0,001 in (0,025 mm) R. max.
3) Remove all burrs.
4) All diameters concentric to Datum A within 0,001 in (0,025 mm) T.I.R.
5) All surfaces shall be Ra 32 µin (0,8 µm) maximum except the mating surfaces 30,0° ± 1° and Ø*D* shall be Ra 16 µin (0,4 µm) maximum.
6) Chamfer first thread.
7) No lubricant allowed.

NOTE For dimensions, see Table 8.

Figure 8 – SMP3 Separation force gauge – Smooth bore

Documents
Document Sharing Hub
Full document details: IEC 61169-69-2024

Table 8 – Dimensions of SMP3 separation force gauge – Smooth bore

Ref.	Inches (millimetres)		Remarks
	Min.	Max.	
B	0,073 (1,854)	0,075 (1,905)	
D	0,060 9 (1,547)	0,061 1 (1,552)	
E	0,002 (0,051)	0,004 (0,102)	
F	0,048 (1,219)	0,050 (1,270)	
G	0,033 (0,838)	0,041 (1,041)	
J	0,170 (4,318)	0,180 (4,572)	
K	0,245 (6,223)	0,255 (6,477)	
L	0,217 (5,512)	0,223 (5,664)	
M	0,370 (9,398)	0,380 (9,652)	
N	0,021 (0,533)	0,031 (0,787)	

4.2.2.8 Test procedure

The force gauge shall be threaded onto the Figure 9 SMP3 gauge block and torqued to prevent loosening of the thread during force measurement.

Figure 8 separation force gauge – smooth bore shall be fully mated 5 times with the outer contact of the connector. The separation force shall be measured on the withdrawal of the fifth mating cycle. The separation force shall be 1,33 N (0,3 lbs) minimum.

Documents
Document Sharing Hub
Full document details: IEC 61169-69-2024

4.2.2.9 SMP3 gauge block

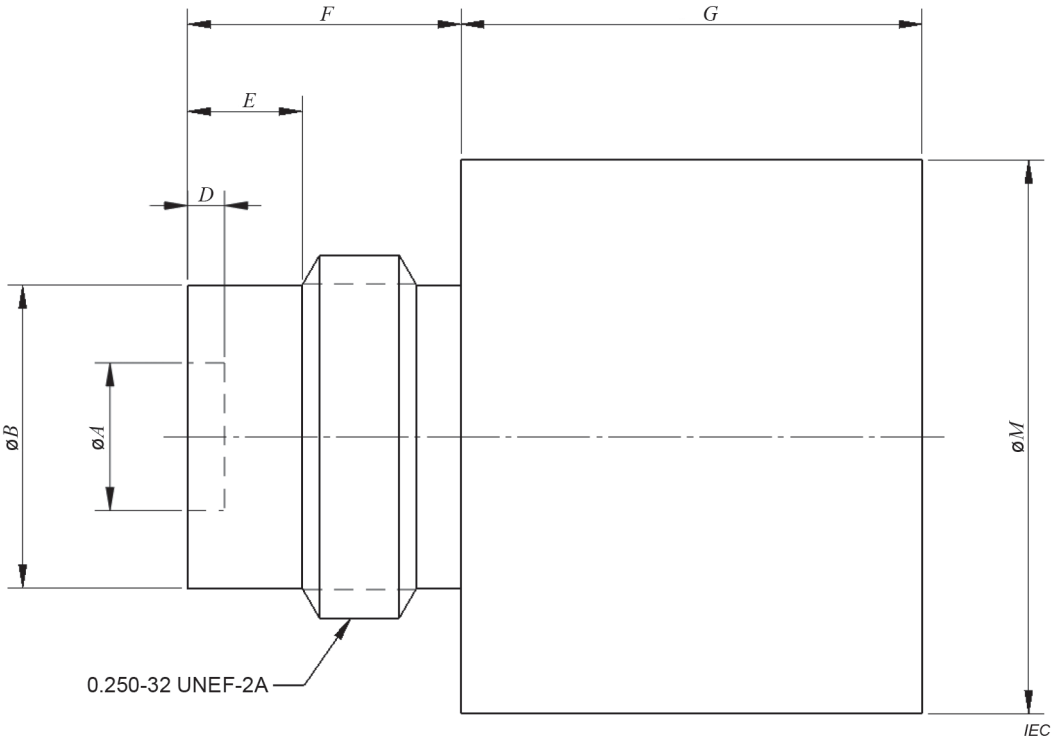

Requirements:

1) Material – 440 stainless steel
2) Break corners and edges 0,005 in (0,127 mm) R. max.
3) Remove all burrs.
4) All diameters concentric within 0,005 in (0,127 mm) T.I.R.
5) All surfaces shall be Ra 63 µin (1,6 µm) max.
6) Chamfer first and last thread.

NOTE For dimensions, see Table 9.

Figure 9 – SMP3 gauge block

Table 9 – Dimensions of SMP3 gauge block

Ref.	Inches (millimetres)		Remarks
	Min.	Max.	
A	0,100 (2,540)	-	
B	0,203 (5,156)	0,207 (5,258)	
M	0,370 (9,398)	0,380 (9,652)	
D	0,010 (0,254)	-	
E	0,075 (1,905)	0,080 (2,032)	
F	0,180 (4,572)	0,190 (4,826)	
G	0,307 (7,798)	0,317 (8,052)	

Documents
Document Sharing Hub
Full document details: IEC 61169-69-2024