IEC 61169-71

Edition 1.0 2022-05

INTERNATIONAL STANDARD

NORME INTERNATIONALE

Radio-frequency connectors – Part 71: Sectional specification for RF coaxial connectors with inner diameter of outer conductor 5 mm – Characteristic impedance 50 Ohms – type NEX10®

Connecteurs pour fréquences radioélectriques – Partie 71: Spécification intermédiaire pour connecteurs RF coaxiaux avec conducteur extérieur présentant un diamètre intérieur de 5 mm – Impédance caractéristique de 50 ohms (type NEX10®)

IEC 61169-71:2022-05(en-fr)

Documents
Document Sharing Hub

Full document details: IEC 61169-71-2022

THIS PUBLICATION IS COPYRIGHT PROTECTED
Copyright © 2022 IEC, Geneva, Switzerland

All rights reserved. Unless otherwise specified, no part of this publication may be reproduced or utilized in any form or by any means, electronic or mechanical, including photocopying and microfilm, without permission in writing from either IEC or IEC's member National Committee in the country of the requester. If you have any questions about IEC copyright or have an enquiry about obtaining additional rights to this publication, please contact the address below or your local IEC member National Committee for further information.

Droits de reproduction réservés. Sauf indication contraire, aucune partie de cette publication ne peut être reproduite ni utilisée sous quelque forme que ce soit et par aucun procédé, électronique ou mécanique, y compris la photocopie et les microfilms, sans l'accord écrit de l'IEC ou du Comité national de l'IEC du pays du demandeur. Si vous avez des questions sur le copyright de l'IEC ou si vous désirez obtenir des droits supplémentaires sur cette publication, utilisez les coordonnées ci-après ou contactez le Comité national de l'IEC de votre pays de résidence.

IEC Secretariat
3, rue de Varembé
CH-1211 Geneva 20
Switzerland

Tel.: +41 22 919 02 11
info@iec.ch
www.iec.ch

About the IEC
The International Electrotechnical Commission (IEC) is the leading global organization that prepares and publishes International Standards for all electrical, electronic and related technologies.

About IEC publications
The technical content of IEC publications is kept under constant review by the IEC. Please make sure that you have the latest edition, a corrigendum or an amendment might have been published.

IEC publications search - webstore.iec.ch/advsearchform
The advanced search enables to find IEC publications by a variety of criteria (reference number, text, technical committee, …). It also gives information on projects, replaced and withdrawn publications.

IEC Just Published - webstore.iec.ch/justpublished
Stay up to date on all new IEC publications. Just Published details all new publications released. Available online and once a month by email.

IEC Customer Service Centre - webstore.iec.ch/csc
If you wish to give us your feedback on this publication or need further assistance, please contact the Customer Service Centre: sales@iec.ch.

IEC Products & Services Portal - products.iec.ch
Discover our powerful search engine and read freely all the publications previews. With a subscription you will always have access to up to date content tailored to your needs.

Electropedia - www.electropedia.org
The world's leading online dictionary on electrotechnology, containing more than 22 300 terminological entries in English and French, with equivalent terms in 19 additional languages. Also known as the International Electrotechnical Vocabulary (IEV) online.

A propos de l'IEC
La Commission Electrotechnique Internationale (IEC) est la première organisation mondiale qui élabore et publie des Normes internationales pour tout ce qui a trait à l'électricité, à l'électronique et aux technologies apparentées.

A propos des publications IEC
Le contenu technique des publications IEC est constamment revu. Veuillez vous assurer que vous possédez l'édition la plus récente, un corrigendum ou amendement peut avoir été publié.

Recherche de publications IEC - webstore.iec.ch/advsearchform
La recherche avancée permet de trouver des publications IEC en utilisant différents critères (numéro de référence, texte, comité d'études, …). Elle donne aussi des informations sur les projets et les publications remplacées ou retirées.

IEC Just Published - webstore.iec.ch/justpublished
Restez informé sur les nouvelles publications IEC. Just Published détaille les nouvelles publications parues. Disponible en ligne et une fois par mois par email.

Service Clients - webstore.iec.ch/csc
Si vous désirez nous donner des commentaires sur cette publication ou si vous avez des questions contactez-nous: sales@iec.ch.

IEC Products & Services Portal - products.iec.ch
Découvrez notre puissant moteur de recherche et consultez gratuitement tous les aperçus des publications. Avec un abonnement, vous aurez toujours accès à un contenu à jour adapté à vos besoins.

Electropedia - www.electropedia.org
Le premier dictionnaire d'électrotechnologie en ligne au monde, avec plus de 22 300 articles terminologiques en anglais et en français, ainsi que les termes équivalents dans 19 langues additionnelles. Egalement appelé Vocabulaire Electrotechnique International (IEV) en ligne.

AVA Documents
Document Sharing Hub

Full document details: IEC 61169-71-2022

IEC 61169-71

Edition 1.0 2022-05

INTERNATIONAL STANDARD

NORME INTERNATIONALE

Radio-frequency connectors – Part 71: Sectional specification for RF coaxial connectors with inner diameter of outer conductor 5 mm – Characteristic impedance 50 Ohms – type NEX10®

Connecteurs pour fréquences radioélectriques – Partie 71: Spécification intermédiaire pour connecteurs RF coaxiaux avec conducteur extérieur présentant un diamètre intérieur de 5 mm – Impédance caractéristique de 50 ohms (type NEX10®)

INTERNATIONAL
ELECTROTECHNICAL
COMMISSION

COMMISSION
ELECTROTECHNIQUE
INTERNATIONALE

ICS 33.120.30

ISBN 978-2-8322-1430-5

Warning! Make sure that you obtained this publication from an authorized distributor.
Attention! Veuillez vous assurer que vous avez obtenu cette publication via un distributeur agréé.

® Registered trademark of the International Electrotechnical Commission
Marque déposée de la Commission Electrotechnique Internationale

Documents
Document Sharing Hub

Full document details: IEC 61169-71-2022

CONTENTS

FOREWORD 4
INTRODUCTION 6
1 Scope 7
2 Normative references 7
3 Terms and definitions 7
4 Mating face and gauge information 8
4.1 General purpose connector: Grade 2 8
4.1.1 Screw type connector with pin centre contact 8
4.1.2 Quick lock type connector with pin centre contact 9
4.1.3 Connector with socket centre contact 11
4.2 Gauges 13
4.2.1 Gauge pin for socket centre contact 13
4.2.2 Gauge rings for plug outer contact 14
4.3 Standard test connectors: Grade 1 15
4.3.1 Standard test connector with pin centre contact 15
4.3.2 Standard test connector with socket centre contact 17
5 Quality assessment procedures 20
5.1 General 20
5.2 Ratings and characteristics 20
5.3 Test schedule and inspection requirements 22
5.3.1 Acceptance tests 22
5.3.2 Periodic tests 23
5.4 Procedures for the quality conformance 25
5.4.1 Quality conformance inspection 25
5.4.2 Qualification approval and its maintenance 25
6 Instructions for preparation of detail specifications 26
6.1 General 26
6.2 Identification of the component 26
6.3 Performances 26
6.4 Marking, ordering information and related matters 26
6.5 Selection of tests, test conditions and severities 26
6.6 Blank detail specification pro-forma for RF coaxial connector with inner diameter of outer conductor 5 mm with screw coupling-characteristic impedance 50 ohms (type NEX10®) 27
Bibliography 32

Figure 1 – Screw type connector with pin centre contact 8
Figure 2 – Quick lock type connector with pin centre contact W 10
Figure 3 – Connector with socket centre contact 12
Figure 4 – Gauge pin for socket centre contact 14
Figure 5 – Gauge rings for plug outer contact 15
Figure 6 – Standard test connector with pin centre contact interface 16
Figure 7 – Standard test connector with socket centre contact interface 18

Table 1 – Dimensions of screw type connector with pin centre contact 9

AVA Documents
Document Sharing Hub

Full document details: IEC 61169-71-2022

Table 2 – Dimensions of quick lock type connector with pin centre contact 10
Table 3 – Dimensions of connector with socket centre contact 13
Table 4 – Dimensions of gauge pin for socket centre contact 14
Table 5 – Dimensions of gauge rings for plug outer contact 15
Table 6 – Interface dimensions of standard test connector with pin centre contact 17
Table 7 – Interface dimensions of standard test connector with socket centre contact 19
Table 8 – Ratings and characteristics 20
Table 9 – Acceptance tests 23
Table 10 – Periodic tests 24

Documents
Document Sharing Hub

Full document details: IEC 61169-71-2022

INTERNATIONAL ELECTROTECHNICAL COMMISSION

RADIO-FREQUENCY CONNECTORS –

Part 71: Sectional specification for RF coaxial connectors with inner diameter of outer conductor 5 mm – Characteristic impedance 50 Ohms – type NEX10®

FOREWORD

1) The International Electrotechnical Commission (IEC) is a worldwide organization for standardization comprising all national electrotechnical committees (IEC National Committees). The object of IEC is to promote international co-operation on all questions concerning standardization in the electrical and electronic fields. To this end and in addition to other activities, IEC publishes International Standards, Technical Specifications, Technical Reports, Publicly Available Specifications (PAS) and Guides (hereafter referred to as "IEC Publication(s)"). Their preparation is entrusted to technical committees; any IEC National Committee interested in the subject dealt with may participate in this preparatory work. International, governmental and non-governmental organizations liaising with the IEC also participate in this preparation. IEC collaborates closely with the International Organization for Standardization (ISO) in accordance with conditions determined by agreement between the two organizations.
2) The formal decisions or agreements of IEC on technical matters express, as nearly as possible, an international consensus of opinion on the relevant subjects since each technical committee has representation from all interested IEC National Committees.
3) IEC Publications have the form of recommendations for international use and are accepted by IEC National Committees in that sense. While all reasonable efforts are made to ensure that the technical content of IEC Publications is accurate, IEC cannot be held responsible for the way in which they are used or for any misinterpretation by any end user.
4) In order to promote international uniformity, IEC National Committees undertake to apply IEC Publications transparently to the maximum extent possible in their national and regional publications. Any divergence between any IEC Publication and the corresponding national or regional publication shall be clearly indicated in the latter.
5) IEC itself does not provide any attestation of conformity. Independent certification bodies provide conformity assessment services and, in some areas, access to IEC marks of conformity. IEC is not responsible for any services carried out by independent certification bodies.
6) All users should ensure that they have the latest edition of this publication.
7) No liability shall attach to IEC or its directors, employees, servants or agents including individual experts and members of its technical committees and IEC National Committees for any personal injury, property damage or other damage of any nature whatsoever, whether direct or indirect, or for costs (including legal fees) and expenses arising out of the publication, use of, or reliance upon, this IEC Publication or any other IEC Publications.
8) Attention is drawn to the Normative references cited in this publication. Use of the referenced publications is indispensable for the correct application of this publication.
9) Attention is drawn to the possibility that some of the elements of this IEC Publication may be the subject of patent rights. IEC shall not be held responsible for identifying any or all such patent rights.

IEC 61169-71 has been prepared by subcommittee 46F: RF and microwave passive components, of IEC technical committee 46: Cables, wires, waveguides, RF connectors, RF and microwave passive components and accessories. It is an International Standard.

The text of this International Standard is based on the following documents:

Draft	Report on voting
46F/618/FDIS	46F/622/RVD

Full information on the voting for its approval can be found in the report on voting indicated in the above table.

The language used for the development of this International Standard is English.

Documents
Document Sharing Hub

Full document details: IEC 61169-71-2022

This document was drafted in accordance with ISO/IEC Directives, Part 2, and developed in accordance with ISO/IEC Directives, Part 1 and ISO/IEC Directives, IEC Supplement, available at www.iec.ch/members_experts/refdocs. The main document types developed by IEC are described in greater detail at www.iec.ch/standardsdev/publications.

The committee has decided that the contents of this document will remain unchanged until the stability date indicated on the IEC website under webstore.iec.ch in the data related to the specific document. At this date, the document will be

- reconfirmed,
- withdrawn,
- replaced by a revised edition, or
- amended.

Documents
Document Sharing Hub

Full document details: IEC 61169-71-2022

INTRODUCTION

The International Electrotechnical Commission (IEC) draws attention to the fact that it is claimed that compliance with this document may involve the use of a patent. IEC takes no position concerning the evidence, validity, and scope of this patent right.

The holder of this patent right has assured IEC that s/he is willing to negotiate licences under reasonable and non-discriminatory terms and conditions with applicants throughout the world. In this respect, the statement of the holder of this patent right is registered with IEC. Information may be obtained from the patent database available at patents.iec.ch.

Attention is drawn to the possibility that some of the elements of this document may be the subject of patent rights other than those in the patent database. IEC shall not be held responsible for identifying any or all such patent rights.

Documents
Document Sharing Hub

Full document details: IEC 61169-71-2022

RADIO-FREQUENCY CONNECTORS –

Part 71: Sectional specification for RF coaxial connectors with inner diameter of outer conductor 5 mm – Characteristic impedance 50 Ohms – type NEX10®

1 Scope

This part of IEC 61169, which is a sectional specification (SS), provides information and rules for the preparation of detail specifications (DS) for RF coaxial connector, typically for use in 50 Ω radio communication systems, type NEX10®[1].

This document describes mating face dimensions for general purpose connectors (grade 2), dimensional details of standard test connectors (grade 1), gauging information and tests selected from IEC 61169-1, applicable to all detail specifications relating to type NEX10® RF coaxial connectors.

This document indicates recommended performance characteristics to be considered when writing a detail specification and it covers test schedules and inspection requirements for assessment levels M and H.

The type NEX10® RF coaxial connectors are used with all kinds of RF cables and microstrip circuits in radio frequency transmission systems with operating frequencies up to 20 GHz.

NOTE Metric dimension are original dimensions. All undimensioned pictorial configurations are for reference purpose only.

2 Normative references

The following documents are referred to in the text in such a way that some or all of their content constitutes requirements of this document. For dated references, only the edition cited applies. For undated references, the latest edition of the referenced document (including any amendments) applies.

IEC 61169-1:2013, *Radio frequency connectors – Part 1: Generic specification – General requirements and measuring methods*

IEC 62153-4-7, *Metallic cables and other passive components test methods – Part 4-7: Electromagnetic compatibility (EMC) -Test method for measuring of transfer impedance Z_T and screening attenuation a_S or coupling attenuation a_C of connectors and assemblies – Triaxial tube in tube method*

ISO 3290-1, *Rolling bearings-balls – Part 1: steel balls*

3 Terms and definitions

No terms and definitions are listed in this document.

[1] NEX10® is an example of a suitable product available commercially. This information is given for the convenience of users of this document and does not constitute an endorsement by IEC of this product.

AVA Documents
Document Sharing Hub

ISO and IEC maintain terminological databases for use in standardization at the following addresses:

- IEC Electropedia: available at http://www.electropedia.org/
- ISO Online browsing platform: available at http://www.iso.org/obp

4 Mating face and gauge information

4.1 General purpose connector: Grade 2

4.1.1 Screw type connector with pin centre contact

The mating face of pin connector with screw type coupling is shown in Figure 1 and its dimensions are shown in Table 1.

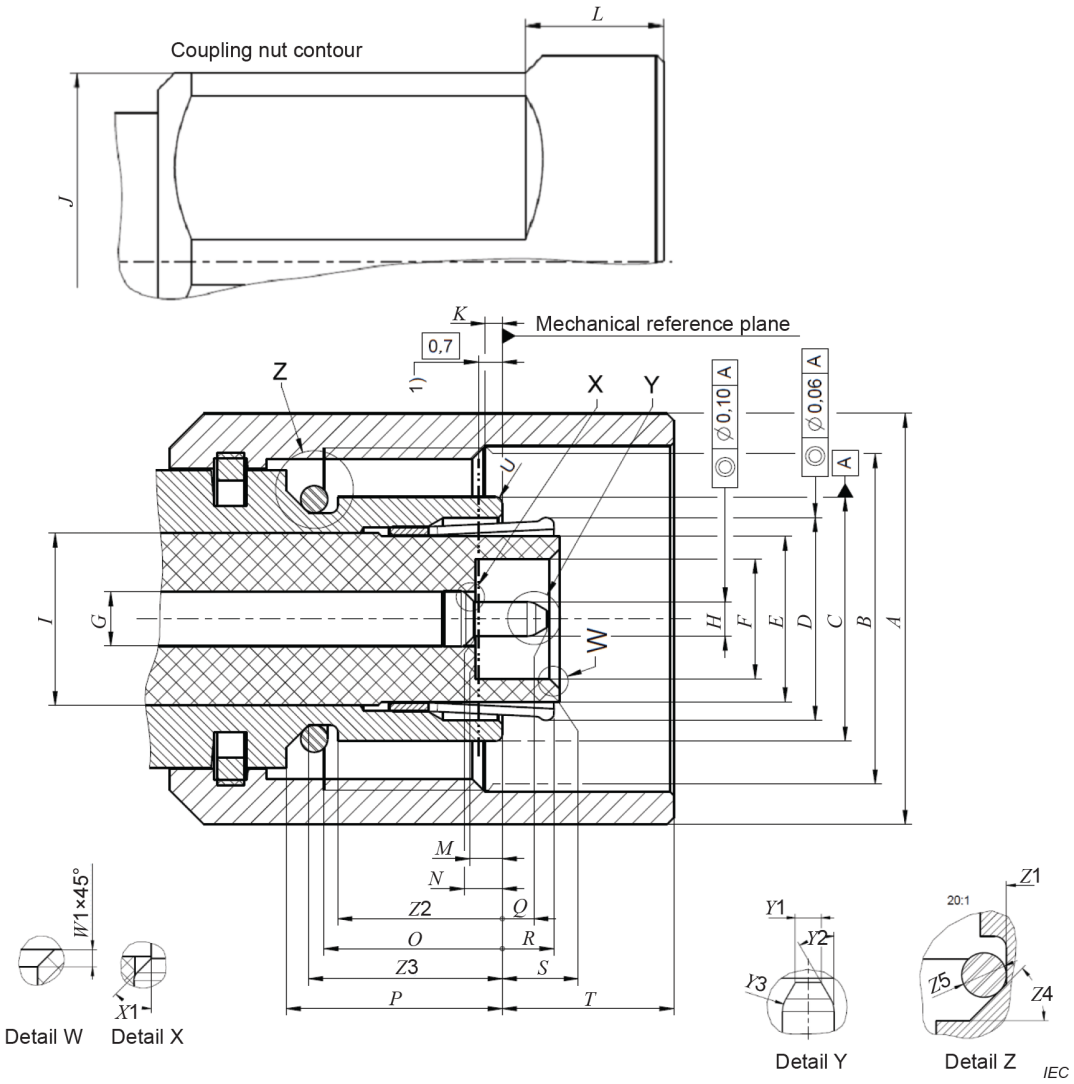

1) base for electrical requirements

Figure 1 – Screw type connector with pin centre contact

Documents
Document Sharing Hub
Full document details: IEC 61169-71-2022

Table 1 – Dimensions of screw type connector with pin centre contact

Ref.	mm		Notes
	Min.	Max.	
A	11,85	--	Diameter
B	M10 × 0,75		Thread, tolerance 6H
C	7,11	7,15	Diameter
D	5,85	6,1	Diameter, see Note 2
E	4,9 nom.		Diameter, for 50 Ω, see Note1
F	3,45	3,55	
G	1,53	1,59	See Note 1
H	0,975	1,025	
I	5,0 nom.		Diameter, see Note 1
J	11,0 nom		Spanner size
K	−0,3	0,7	
L	3,70	4,30	
M	0,70	0,86	
N	0,70	0,94	
O	4,2	--	
P	6,25	6,35	
Q	1,10	1,50	
R	1,45	1,55	
S	1,56	1,80	
T	4,80	5,80	
U	0,10	0,3	Radius
*Z*1	6,17	6,23	Diameter
*Z*2	4,70	4,90	
*Z*3	5,61	5,69	
*Z*4	43°	47°	Angle
*Z*5	0,75	0,88	Diameter, see Note 3
*Y*1	0,45	0,55	Diameter
*Y*2	28°	32°	Angle
*Y*3	0,45	0,55	Radius
*X*1	45° nom.	--	Angle
*W*1	0,20	0,40	

NOTE 1 Applicable for inner contact and for outer contact detailed to provide 50 Ω nominal impedance.

NOTE 2 Based on electrical requirements.

NOTE 3 Hardness shore 70A.

4.1.2 Quick lock type connector with pin centre contact

The mating face of pin connector with quick lock coupling is shown in Figure 2 and its dimensions are shown in Table 2.

Documents
Document Sharing Hub

Full document details: IEC 61169-71-2022

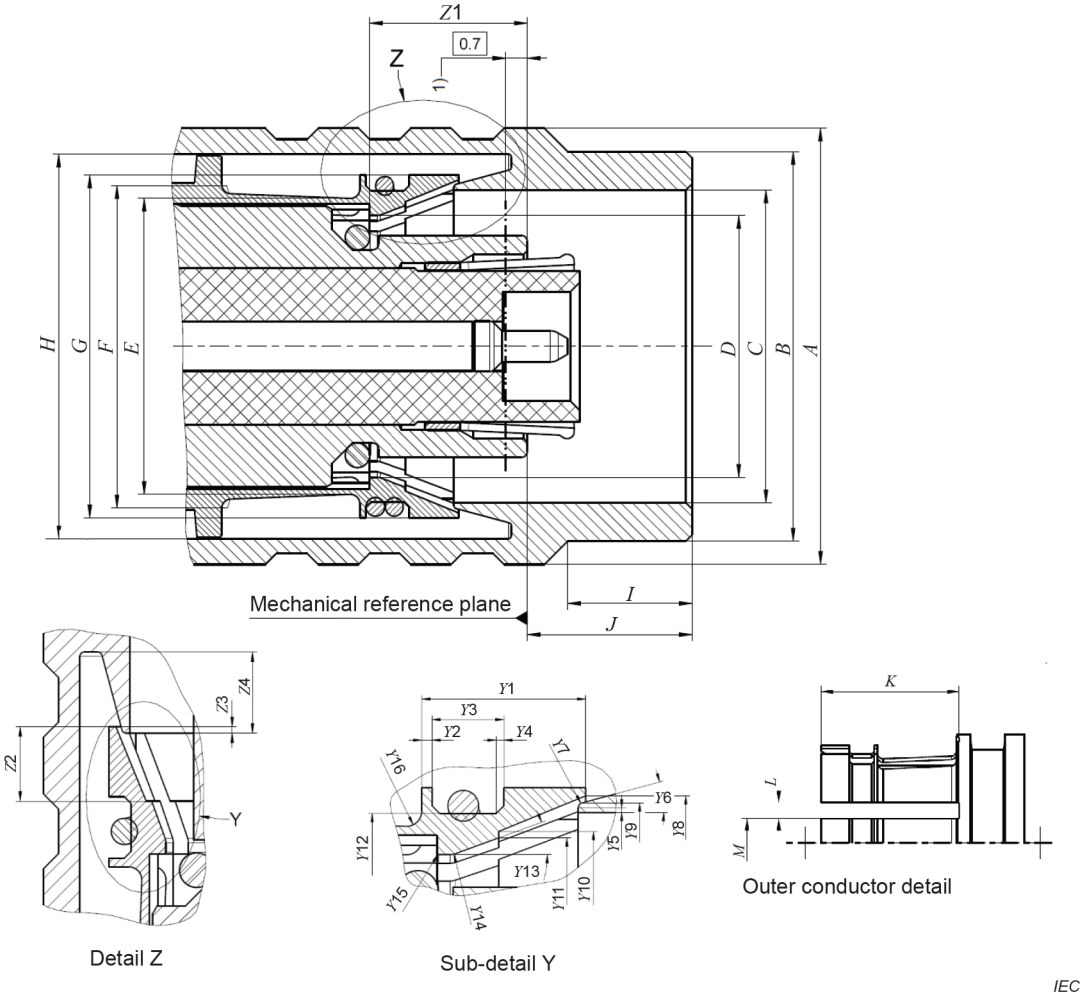

1) base for electrical requirements

Figure 2 – Quick lock type connector with pin centre contact W

Table 2 – Dimensions of quick lock type connector with pin centre contact

Ref.	mm		Notes
	Min.	Max.	
A	--	14,0	Diameter
B	12,4	12,6	Diameter
C	10,02	10,06	Diameter
D	8,37	8,43	Diameter
E	9,48	9,52	Diameter
F	9,78	9,82	Diameter
G	10,97	11,03	Diameter
H	12,32	12,38	Diameter
I	3,70	4,30	
J	4,80	5,8	
K	7,75	7,85	
L	0,87	0,93	8 slots
M	2,71	2,79	
*Y*1	3,15	3,25	

AVA Documents
Document Sharing Hub

Ref.	mm		Notes
	Min.	Max.	
*Y*2	0,17	0,23	
*Y*3	1,37	1,43	
*Y*4	0,10	0,20	Both corners
*Y*5	0,07	0,11	Flat
*Y*6	13°	17°	Angle
*Y*7	0,07	0,13	Radius
*Y*8	10,66	10,72	Diameter
*Y*9	10,41 nom	--	Diameter, junction for reference
*Y*10	9,27	9,33	
*Y*11	9,02	9,08	
*Y*12	9,98	10,02	
*Y*13	19°	21°	Angle
*Y*14	0,25	0,35	Radius
*Y*15	--	0,05	Radius
*Y*16	0,25	0,35	Radius
*Z*1	5,03	5,17	
*Z*2	1,68	1,72	
*Z*3	0,10	0,22	
*Z*4	1,80	--	

4.1.3 Connector with socket centre contact

The mating face of socket connector is shown in Figure 3, and its dimensions are shown in Table 3.

Documents
Document Sharing Hub
Full document details: IEC 61169-71-2022

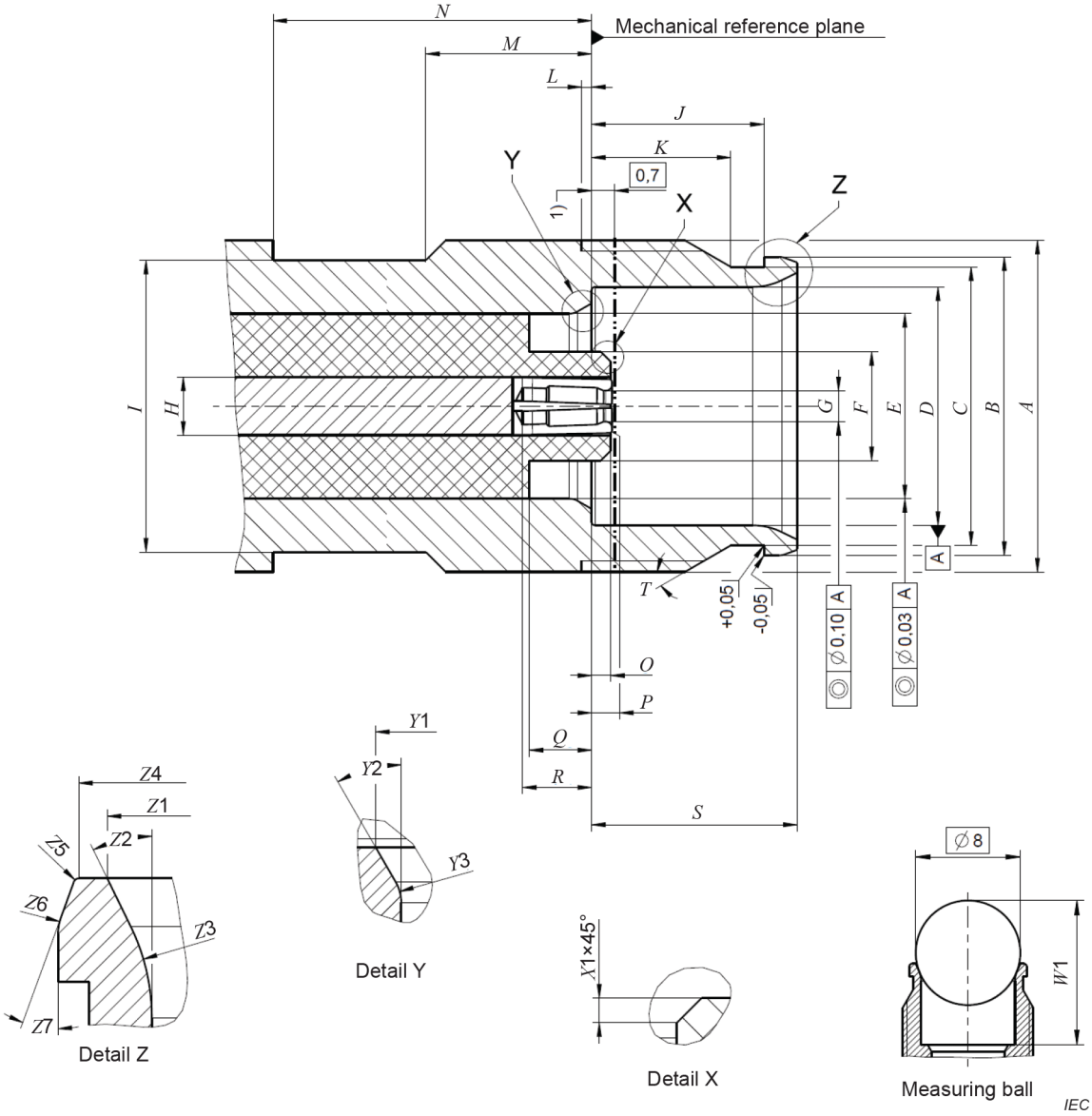

1) base for electrical requirements

Figure 3 – Connector with socket centre contact

Documents
Document Sharing Hub
Full document details: IEC 61169-71-2022

Table 3 – Dimensions of connector with socket centre contact

Ref.	mm		Notes
	Min.	Max.	
A	M10 × 0,75	--	Thread, tolerance 6gl
B	8,97	9,03	Diameter
C	8,37	8,43	Diameter
D	7,17	7,21	Diameter
E	5,57	5,63	Diameter
F	3,23	3,33	Diameter
G	--	0,84	
H	1,74 nom.	--	Diameter, see Note 1
I	8,75	8,85	Sealing area
J	5,17	5,23	
K	4,1	4,3	
L	0,30	--	
M	4,70	5,30	
N	9,00	--	
O	0,46	0,70	
P	0,54	0,70	
Q	1,80	1,96	
R	1,80	--	
S	6,15	6,25	
T	26°	34°	Angle
*W*1	10,97	11,07	See Note 2
*Z*1	8,00	8,10	Diameter
*Z*2	26° nom.		Angle guaranteed by *W*1
*Z*3	1,75	2,25	Radius
*Z*4	8,55	8,65	Diameter
*Z*5	0,02	0,08	Radius
*Z*6	0,45	0,55	Radius
*Z*7	19°	21°	Angle
*Y*1	6,15	6,25	Diameter
*Y*2	28°	32°	Angle
*Y*3	0,45	0,55	Radius
*X*1	0,20	0,40	

NOTE 1 Diameters of contacts detailed to provide 50 Ω nominal impedance.

NOTE 2 Measuring ball according to ISO 3290-1 Grade 5 or better.

4.2 Gauges

4.2.1 Gauge pin for socket centre contact

The gauge pin for socket centre contact is shown in Figure 4, and the dimensions are shown in Table 4.

Documents
Document Sharing Hub

Full document details: IEC 61169-71-2022

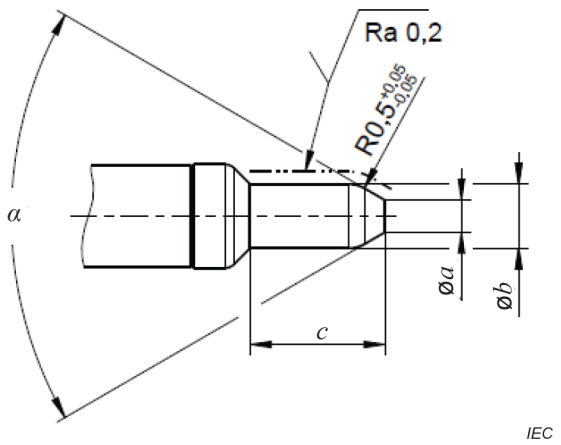

Figure 4 – Gauge pin for socket centre contact

Table 4 – Dimensions of gauge pin for socket centre contact

Ref.	Gauges A (For sizing purpose)		Gauges B (For retention test) Mass of gauge: 51 g ± 1 g	
	mm		mm	
	Min.	Max.	Min.	Max.
a	0,45	0,55	0,45	0,55
b	1,021 5	1,028 5	0,971 5	0,978 5
c	1,9	2,1	1,9	2,1
α	59°	61°	56°	64°
Material: steel, polished.				

The test procedure is as follows:

a) Sizing

The gauge A shall be inserted into the socket centre contact three times. This is a sizing operation.

b) Insertion/separation force test

After sizing, gauge A shall be inserted into the resilient contact. The insertion force shall not exceed 10 N.

Separation force is measured with gauge B and shall require a minimum force of 0,5 N.

4.2.2 Gauge rings for plug outer contact

The gauge ring for plug outer contact is shown in Figure 5, and the dimensions are shown in Table 5.

Documents
Document Sharing Hub
Full document details: IEC 61169-71-2022

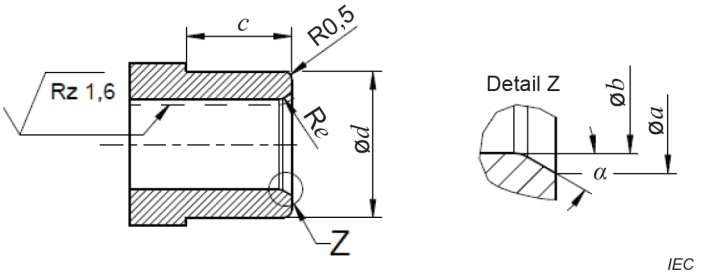

Figure 5 – Gauge rings for plug outer contact

Table 5 – Dimensions of gauge rings for plug outer contact

Ref.	Gauges A (For sizing purpose)		Gauges B (For separation test [a])	
	mm		mm	
	Min.	Max.	Min.	Max.
a	6,25	6,35	6,25	6,35
b	5,564	5,571	5,630	5,637
c	6,4	6,6	6,4	6,6
d	9,1	9,2	9,1	9,2
e	0,45	0,55	0,45	0,55
α	29,5°	30,5°	28°	32°
Material: steel, polished.				
[a] Mass of gauge: 301 g ± 1 g				

The test procedure is as follows:

a) Sizing

The gauge A shall be completely inserted three times into the resilient outer contact. This is a sizing operation.

b) Insertion/separation force test

After sizing, gauge A shall be inserted into the resilient contact. The insertion force shall not exceed 15 N.

Separation force is measured with gauge B and shall require a minimum force of 3 N. All contact segments shall touch the diameter *b* in the region of the tips.

4.3 Standard test connectors: Grade 1

4.3.1 Standard test connector with pin centre contact

The interface of a standard test connector with pin centre contact is shown in Figure 6, and its dimensions are shown in Table 6.

Documents
Document Sharing Hub
Full document details: IEC 61169-71-2022

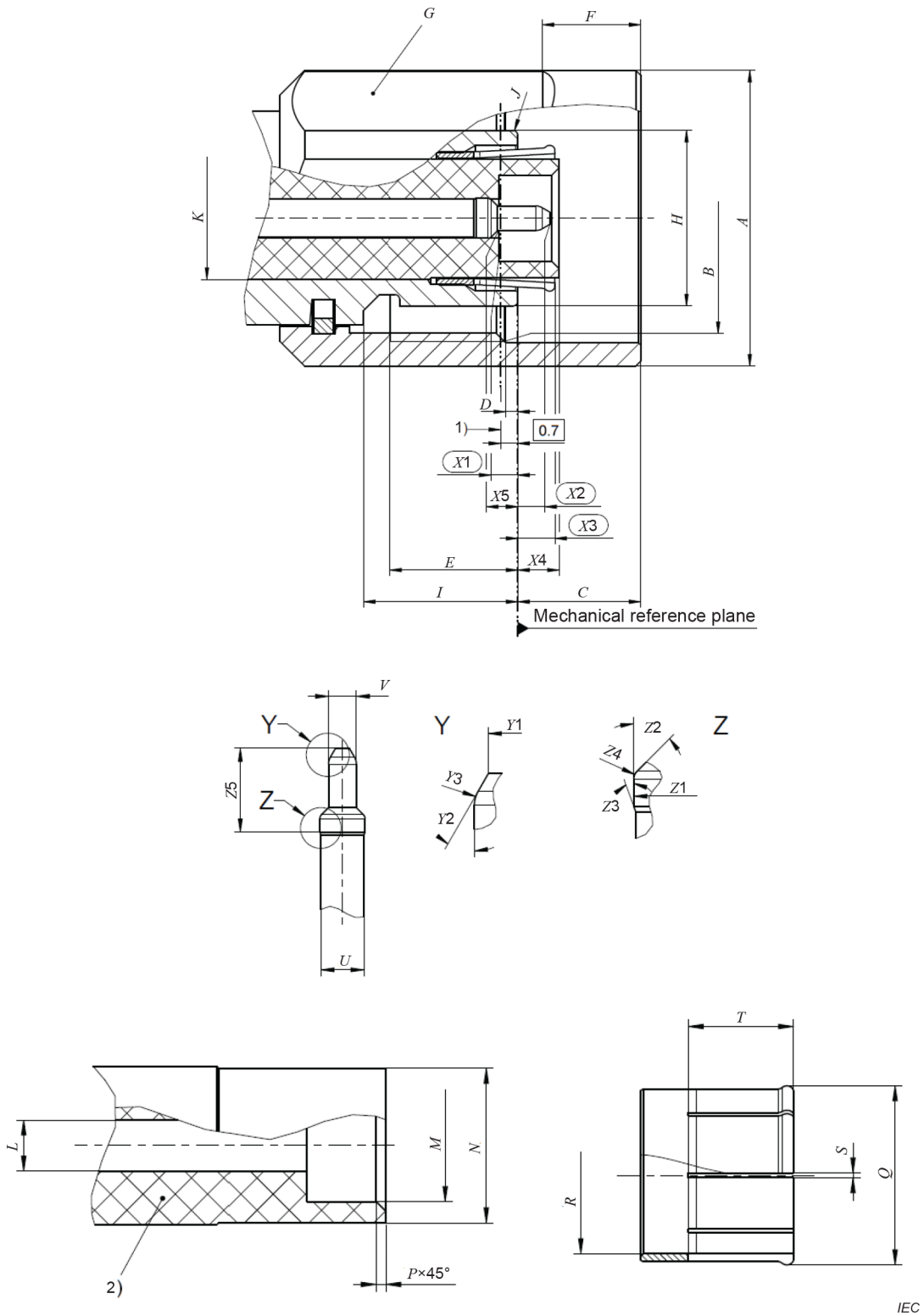

1) base for electrical requirements

2) material PTFE

Figure 6 – Standard test connector with pin centre contact interface

Documents
Document Sharing Hub
Full document details: IEC 61169-71-2022

Table 6 – Interface dimensions of standard test connector with pin centre contact

Ref.	mm		Notes
	Min.	Max.	
A	12,00	--	Diameter, nominal
B	M10 × 0,75	--	Thread, tolerance 6HI
C	4,80	5,80	
D	−0,30	0,70	
E	4,20	--	
F	3,70	4,30	
G	11,00	Nom.	Spanner size
H	7,11	7,15	Diameter
I	6,25	6,35	
J	0,10	0,30	Radius
K	5,00	--	Diameter, nominal, see Note 1
L	1,58	1,62	Diameter
M	3,48	3,52	Diameter
N	4,81	4,85	Diameter
P	0,26	0,34	
Q	5,58	5,62	
R	4,88	4,92	See Note 2
S	0,12	0,18	
T	3,25	3,35	
U	1,54	1,56	Diameter, see Note 1
V	0,99	1,01	Diameter
*X*1	0,78	0,82	
*X*2	1,26	1,34	
*X*3	1,48	1,52	
*X*4	1,62	1,74	
*X*5	0,76	0,88	
*Y*1	0,45	0,55	Diameter
*Y*2	28°	32°	Angle
*Y*3	0,45	0,55	Radius
*Z*1	1,61	1,63	Diameter
*Z*2	44°	46°	Angle
*Z*3	18°	22°	Angle
*Z*4	0,15	0,25	Radius
*Z*5	2,98	3,02	

NOTE 1 Diameters of outer and inner contacts detailed to provide 50 Ω nominal impedance.

NOTE 2 In mounted condition, nominal diameter 4,85 mm.

4.3.2 Standard test connector with socket centre contact

The interface of a standard test connector with socket centre contact is shown in Figure 7 and its dimensions are shown in Table 7.

AVA Documents
Document Sharing Hub

Full document details: IEC 61169-71-2022

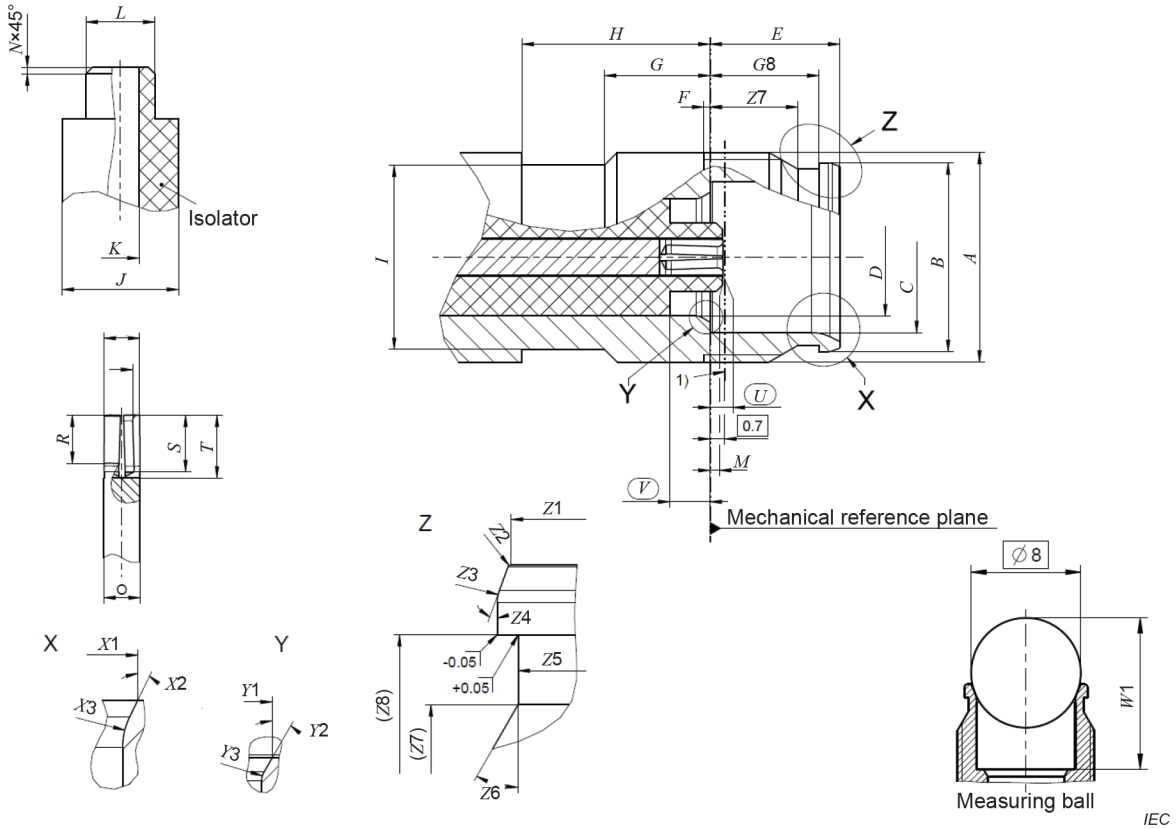

1) base for electrical requirements

Figure 7 – Standard test connector with socket centre contact interface

Documents
Document Sharing Hub
Full document details: IEC 61169-71-2022

Table 7 – Interface dimensions of standard test connector with socket centre contact

Ref.	mm		Notes
	Min.	Max.	
A	M10 × 0,75	--	Thread, tolerance 6 gl
B	8,97	9,03	Diameter
C	7,17	7,23	Diameter
D	5,59	5,61	Diameter
E	6,15	6,25	
F	0,30	--	
G	4,70	5,30	
H	9,00	--	
I	8,75	8,85	Diameter, sealing area
J	5,54	--	Dia. nominal, see Note 1
K	1,76	1,80	Diameter
L	3,26	3,30	Diameter
M	0,52	0,64	
N	0,26	0,34	
O	1,73	1,75	Diameter
P	1,19	1,21	Diameter
Q	1,87	1,89	Diameter
R	2,25	2,35	
S	2,65	2,75	
T	2,95	3,05	
U	0,58	0,66	
V	1,84	1,92	
*W*1	10.98	11,07	See Note 2
*X*1	8,00	8,10	Diameter
*X*2	26° nom	--	Angle
*X*3	1,75	2,25	Radius
*Y*1	6,15	6,25	Diameter
*Y*2	28°	32°	Angle
*Y*3	0,45	0,55	Radius
*Z*1	8,55	8,65	Diameter
*Z*2	0,02	0,08	Radius
*Z*3	0,45	0,55	Radius
*Z*4	19°	21°	Angle
*Z*5	8,37	8,43	Diameter
*Z*6	26°	34°	Angle
*Z*7	4,10	4,30	
*Z*8	5,17	5,23	

NOTE 1 Diameters of contacts detailed to provide 50 Ω nominal impedance.

NOTE 2 Measuring ball according to ISO 3290-1 Grade 5 or better.

AVA Documents
Document Sharing Hub

Full document details: IEC 61169-71-2022